BOARD OF TRUSTEES MEETING
SAMUEL E. DEAN BOARD ROOM
BUTLER GOVERNMENT CENTER
1200 OAK BROOK ROAD
OAK BROOK, ILLINOIS
630-368-5000

Regular Meeting
Tuesday, October 22, 2024
7:00 PM

"Please be advised that any proposed documents attached hereto are in draft form and vary from the final versions which are adopted at the meeting as set forth herein."

1. CALL TO ORDER

2. ROLL CALL

3. PRESIDENT'S OPENING COMMENTS

   A. Oak Brook Fire Department's Commendation Awards Presentation

4. PUBLIC COMMENTS

5. APPROVAL OF MINUTES

   A. Special Board of Trustees Meeting Minutes of September 26, 2024

6. CONSENT AGENDA
All items on the Consent Agenda are considered to be routine in nature and will be enacted in one motion. There will be no separate discussion of these items unless a Board member so requests, in which event, the item will be removed from the Consent Agenda and considered as the first item after approval of the Consent Agenda.

   A. Accounts Payable for Period Ending: October 16, 2024 - $1,674,918.45

      1. LEGAL SERVICES:

         TOTAL LEGAL BUDGET FOR 2024 IS $342,284.00
         TOTAL LEGAL BILLS PAID FOR 2024 - YTD - $251,652.92

         a) Clark, Baird, Smith LLP- Legal Services - September 2024 - $487.50 (FY24 YTD - $11,412.00)

         b) Marquardt & Belmonte, P.C. - Legal Services - August & September 2024 - $448.00 (FY24 YTD - $2,095.00)

         c) Lamp Law LLC - Legal Services - September 2024 - $3,333.33 (FY24 YTD - $29,999.97)

         d) Ottosen DiNolfo Hasenbalg & Castaldo, Ltd. - Legal Services - September 2024 - $29,666.50 (FY24 YTD - $207,413.15)

2. EZA Engineering PLLC - Professional Engineering Services - September 2024 - $21,613.20

3. Ridge IT Corporation - Crowdstrike License - 9/20/24-9/19/25 - $31,002.50

4. Jim's Plaza LLC - Bond Refund - $30,418.00

5. Civiltech Engineering, Inc. - In-House Engineering Services - September 2024 - $20,063.98

6. DuPage Water Commission - September 2024 - $602,176.86

7. Enterprise FM Trust - Monthly Vehicle Leases - $37,817.02

8. Du-Comm - Police Department Quarterly Shares - from November 1, 2024 to January 31, 2025 - $142,769.75

9. Du-Comm - Fire Department Quarterly Shares - from November 1, 2024 to January 31, 2025 - $39,773.50

10. HFS Bureau of Fiscal Operations - GEMT - Quarters 3 & 4, 2023 & Quarters 1 & 2, 2024 - $392,240.51

B. Approval of Payroll Paydate: October 17, 2024 - $936,003.95 — Herman/Martin

C. Authorization to Seek Bids or Proposals or Negotiate Contracts:

1. Golf Club Driving Range Enhancement — Manzo/Martin

7. ITEMS REMOVED FROM CONSENT AGENDA

8. BOARDS AND COMMISSION RECOMMENDATION

A. 3601 & 3505 Adams Road – Subdivision Amendment — Manzo/Tiesenga

B. 100 Oakbrook Center – Rivian EV – Setback Variation — Manzo/Tiesenga

9. ACTIVE BUSINESS

A. Ordinances & Resolutions

1. ORDINANCE G-1260, An Ordinance Amending the Village of Oak Brook Code of Ordinances, As Amended, Title 4, Chapter 1, Section 8A, To Increase the Number of Authorized Class A-1 Liquor Licenses By One To Forty-Four for Eddie V's and Decrease the Number of Class D Liquor Licenses By One To Six for Michael Jordan's Steakhouse. Eddie V's 3001 Butterfield Rd, Oak Brook, IL
Michael Jordan's 1225 West 22nd St., Oak Brook, IL — Herman

2. RESOLUTION R-2241, A Resolution Approving the Waiver of Competitive Bidding and Authorizing the Purchase of a Monitor/Defibrillators — Jain/Nagle

3. ORDINANCE G-1261, An Ordinance Amending Title 13 of the Village of Oak Brook Code of Ordinances — Manzo/Tiesenga

10. BOARD UPDATES

11. ADJOURN TO CLOSED SESSION
For the Purpose of Discussing (1) Minutes of Meetings Lawfully Closed Under This Act, (2) To Discuss the purchase or lease of real property for the use of the public body, (3)To Consider the employment/discipline of a specific employee or employees of the Village Pursuant to 2(C)(21),2(C)5,2(C)(1) Of the Illinois Open Meetings Act Respectively

12. RECONVENE TO OPEN MEETING

13. UNFINISHED BUSINESS

A. Resolutions & Ordinances

1. ORDINANCE S-1708, An Ordinance Authorizing the Acquisition of And Approving a Purchase Agreement for the Real Property Commonly known as _____, Illinois — Herman/Martin

B. Employee Appeal of a Disciplinary Finding — N/A

14. ADJOURNMENT

In accord with the provisions of the American with Disabilities Act, any individual who is in need of a reasonable accommodation in order to participate in or benefit from attendance at this public meeting should contact the Butler Government Center (Village Hall), at 630-368-5010 as soon as possible before the meeting date.

Approval for Payroll Paydate: 10/17/24

Total Gross Payroll			**$**	**654,074.34**
Employee Deductions:				
Illinois Municipal Retirement Fund	$	13,635.82		
Police Pension Fund	$	17,991.81		
Fire Pension Fund	$	12,783.58		
Federal Tax Withholding	$	69,302.69		
State Tax Withholding	$	27,698.68		
Social Security and Medicare	$	25,538.97		
ICMA/NACO/457	$	26,384.28		
Court Orders	$	1,000.54		
Insurance Contributions	$	21,473.56		
Aflac Contributions	$	1,142.57		
Mo Vol Life	$	402.46		
Police Union Dues	$	-		
Fire Union Dues	$	1,398.19		
Public Works Union Dues	$	1,149.17		
125-Medical/Dependent Care	$	3,548.34		
Total Employee Deductions				**223,450.66**
Net Payroll			**$**	**430,623.68**
Village Expenses:				
Police Pension	$	75,253.58		
Fire Pension	$	74,971.27		
IMRF Pension	$	18,998.94		
Insurance Contributions	$	87,166.85		
Social Security and Medicare	$	25,538.97		
Total Village Expenses				**281,929.61**
Total Payroll (Gross Payroll plus Village Expenses)			**$**	**936,003.95**

Payroll Date: 10/17/24

Employee Deductions		Pension Deduction	Salary by Pension Plan	Percent of Pensionable Salary**
	Police	$ 17,991.81	$ 181,552.64	9.910%
	Fire	12,783.58	135,205.17	9.455%
	IMRF	9,861.00	231,067.63	4.268%
	Non-Pensionable	-		0.000%
			$ 547,825.44	

Village Payment into Pensions		Village Contribution	Percent of Payroll*	Percent "Match" of what Employee Contributes
	Police	$ 75,253.58	41.45%	418.3%
	Fire	74,971.27	55.45%	586.5%
	IMRF	18,998.94	8.67%	203.2%
		$ 169,223.79		

*Police and Fire Village contribution rates reflect the State minimum funding requirements. The rates to match 100% funding by 2040 are 51.5% for Police and 67.3% for Fire.

**IMRF employee contribution percentage is statutorily set at 4.5% of pensionable salary; Tier II enrollees are capped at $123,489.18 for 2023. A drop in percentage of pensionable salary below 4.5% for employee contribution reflects Tier II enrollees having met the pensionable wage cap for a given year.

ITEM 6.C.1.
BOARD OF TRUSTEES MEETING
SAMUEL E. DEAN BOARD ROOM
BUTLER GOVERNMENT CENTER
1200 OAK BROOK ROAD
OAK BROOK, ILLINOIS
630-368-5000

AGENDA ITEM

Board of Trustees Regular Meeting
of
October 22, 2024

SUBJECT: Driving Range Project

FROM: Art Segura, Sports Core Director

BUDGET SOURCE/BUDGET IMPACT: Program #831 Structural Improvements ($325,000 budgeted for 2025)

RECOMMENDED MOTION: I move that the Village Board authorize staff to obtain bids to enhance the driving range by adding a matted hitting bay structure.

Background/History:
With the support of the Sports Core Committee, staff is seeking authorization to solicit bids for a hitting mat bay structure at the Oak Brook Golf Club Driving Range. Currently, the driving range operates as an all-grass facility.

This year has been the busiest for the driving range, with projections of selling 59,500 buckets. In 2023, we sold a total of 57,612 buckets.

There are several reasons that staff and the Sports Core Advisory Committee recommend adding a hitting (mat) bay structure:

1. **Extended Operating Season**: The range could open one month earlier and remain open one month later. The current schedule is April 1 to October 31; with mats, the new schedule would be March 1 to November 30, and possibly later into the year. This change would generate additional revenue.
2. **Weather Resilience**: The covered mat structure would allow us to stay open during rainy days.
3. **Grass Preservation**: Given the high volume of traffic this year, we received numerous complaints about the worn/damaged grass as a result of excess usage. Incorporating mats would enable us to designate specific days for grass and mat use, helping to preserve the grass and allow it to regrow.
4. **Extended Hours**: The new structure would allow us to add lighting, enabling us to keep

the range open later into the evening; especially later in the season. Staff recommends extending hours until 9:00 PM, generating additional revenue.

Staff anticipates that adding the hitting bay structure would generate an additional $100,000 per year by allowing for earlier openings, later season use, extended daily hours, and operations during rainy days.

Multiple bids will be required for the electrical work, concrete, and structure. If time allows, we hope to bid on the concrete foundation portion of the project this year in an attempt to complete the concrete foundation this year, in an attempt to complete the project before March 2025, which may prove challenging.

Recommendation:
I move that the Village Board authorize staff to solicit bids for enhancing the driving range by adding a matted hitting bay structure.

Attachments:
1. Driving Range Image

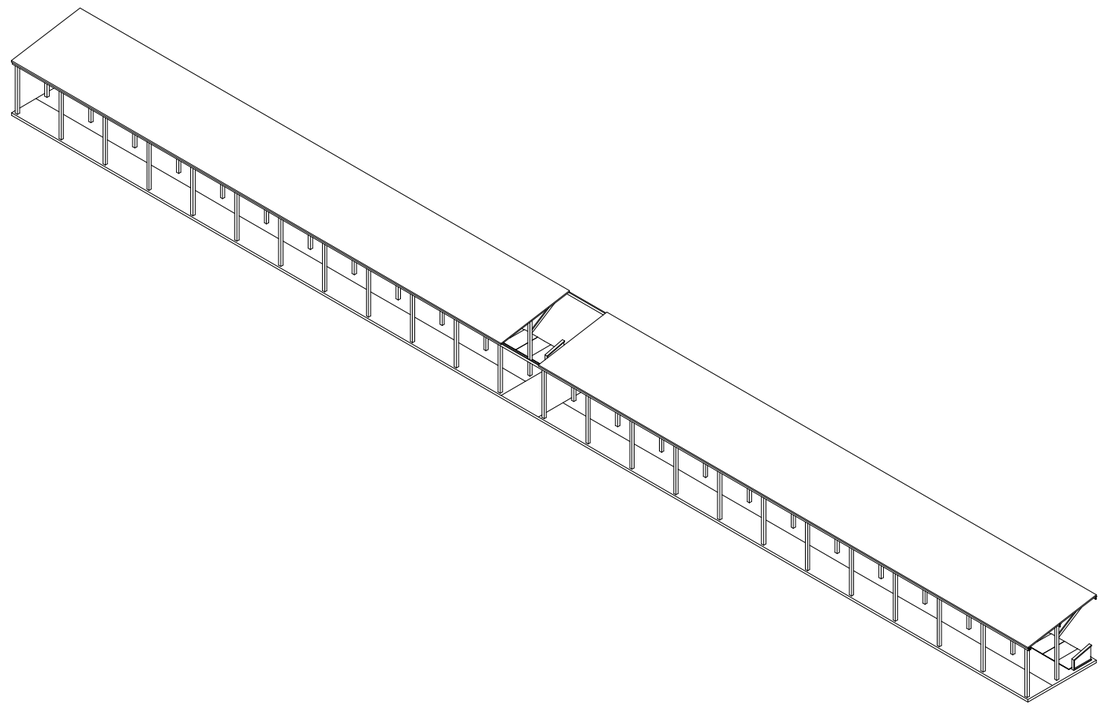

1 3-D Aerial

Room Legend

- Golfer's Area
- Bay Lounge
- Pass Through

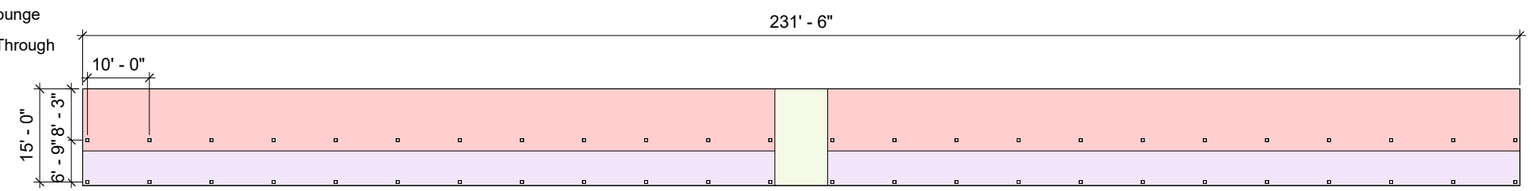

2 Floor Plan

Cover The Tees
Driving Range Solutions

No.	Description	Date

Concept Design Pack

2 Post 22 Bay Open Air with 10ft Pass Through

3-D views & Floor Plan

Project Number	Project Number
Date	Issue Date
Drawn By	K.G.M.
Checked By	Checker

100

Scale

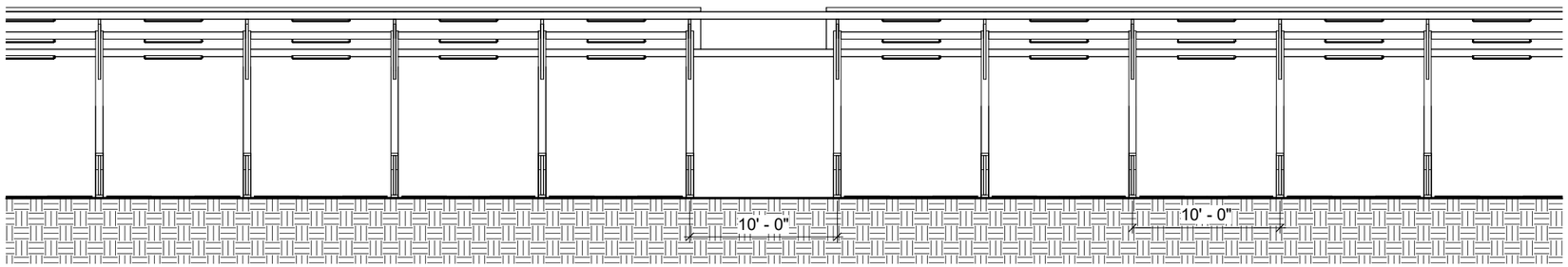

1 Front Elevation

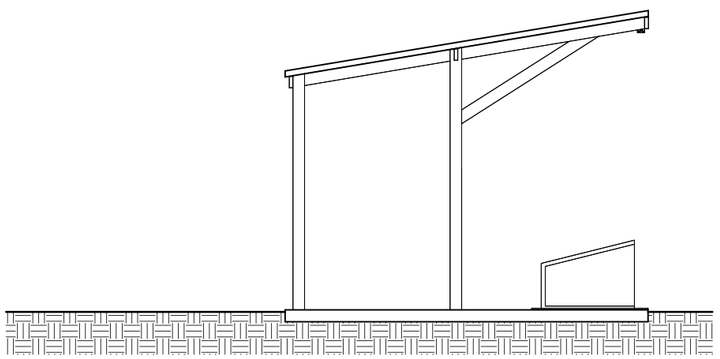

2 Right Elevation

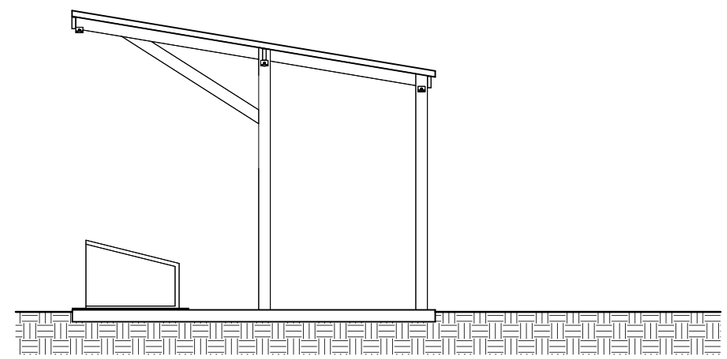

3 Left Elevation

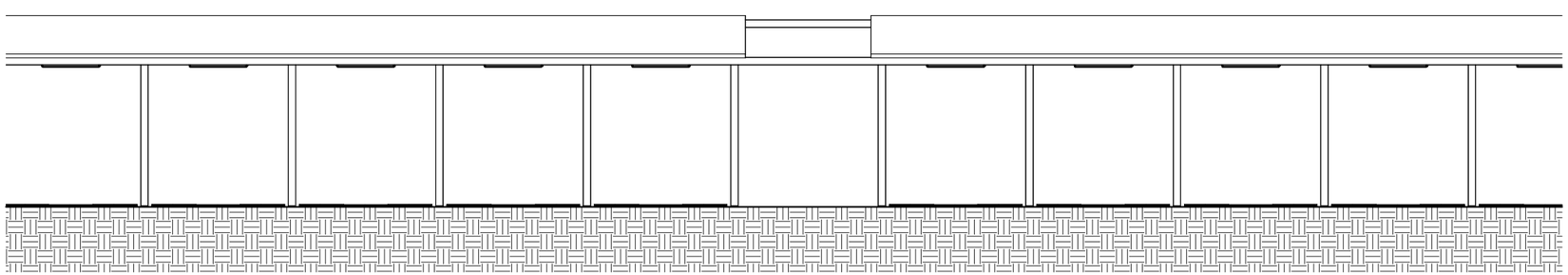

4 Back Elevation

Cover The Tees

Driving Range Solutions

No.	Description	Date

Concept Design Pack

2 Post 22 Bay Open Air with 10ft Pass Through

Elevations

Project Number	Project Number
Date	Issue Date
Drawn By	K.G.M.
Checked By	Checker

101

Scale

1 Site Overlay zoomed

Cover The Tees

Driving Range Solutions

No.	Description	Date

Concept Design Pack

2 Post 22 Bay Open Air with 10ft Pass Through

site overlay zoomed

Project Number	Project Number
Date	Issue Date
Drawn By	Author
Checked By	Checker

102

Scale

1 Site Overlay

Cover The Tees
Driving Range Solutions

No.	Description	Date

Concept Design Pack

2 Post 22 Bay Open Air with 10ft Pass Through

site overlay

Project Number	Project Number
Date	Issue Date
Drawn By	Author
Checked By	Checker

103

Scale

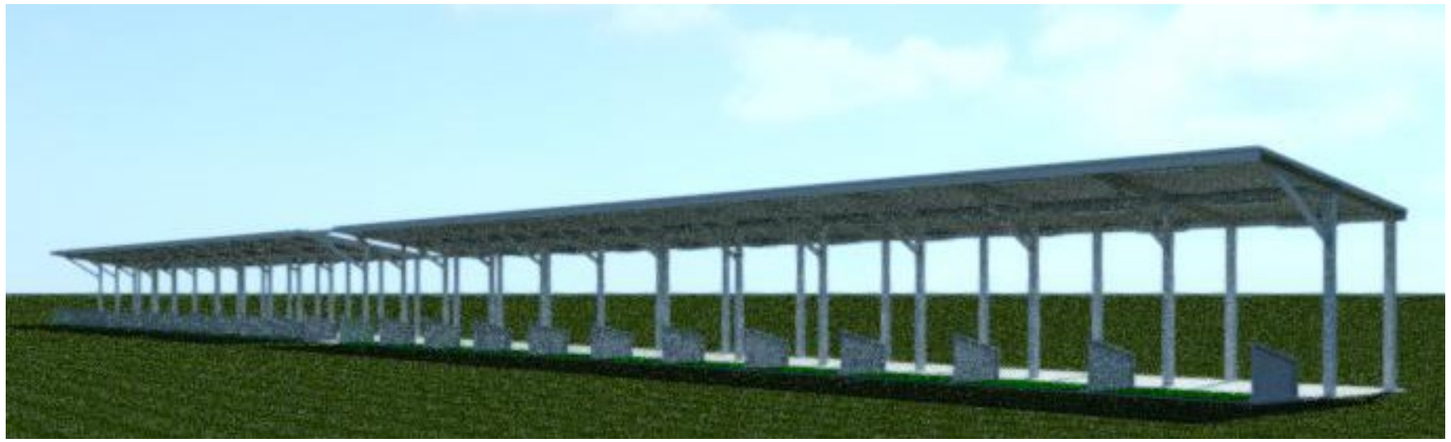

1 Concept Rendering 1

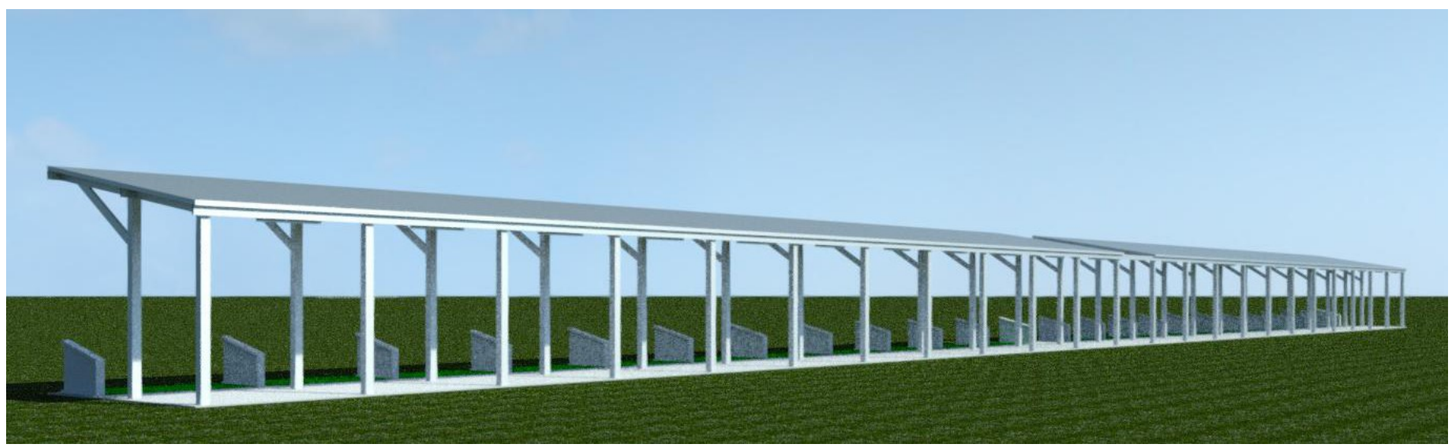

2 Concept Rendering 2

Cover The Tees

Driving Range Solutions

No.	Description	Date

Concept Design Pack

2 Post 22 Bay Open Air with 10ft Pass Through

Concept Renderings

Project Number	Project Number
Date	Issue Date
Drawn By	K.G.M.
Checked By	Checker

104

Scale

ITEM 8.A.
BOARD OF TRUSTEES MEETING
SAMUEL E. DEAN BOARD ROOM
BUTLER GOVERNMENT CENTER
1200 OAK BROOK ROAD
OAK BROOK, ILLINOIS
630-368-5000

AGENDA ITEM

Board of Trustees Regular Meeting
of
October 22, 2024

SUBJECT: 3601 & 3505 Adams Road – Subdivision Amendment

FROM: Rebecca Von Drasek, Development Services Director

BUDGET SOURCE/BUDGET IMPACT: N/A

RECOMMENDED MOTION: I move that the Village Board concur with the recommendation from the Planning & Zoning Commission to approve the proposed Final Plat for L2KM2 Subdivision Amendment, subject to the following conditions:

1. All other provisions of Resolution R-715 and covenants will remain in full force and effect.
2. Final engineering approval prior to recording of the Plat.
3. Add the condition "Notwithstanding the attached exhibits, the applicant shall meet all Village Ordinance requirements at the time of building permit application except as specifically varied or waived."

Background/History:

Doug Pertz, the owner of the 7.64 acre parcel known as the L2KM2 Subdivision is seeking approval of a final plat of subdivision in order to adjust the lots lines between the two existing parcels of the Michael E. Scheid Subdivision. Lot 1 will be 152,525 sq. ft. (3.5 acres) and Lot 2 of the L2KM2 Subdivision will be 180,280 sq. ft. (4.14 acres).

In 1999, the Michael E. Scheid Subdivision was approved under Resolution R-715. The subdivision, originally proposed in 1995 (S-833), created the two lots and approved a stormwater variance. The approvals created the Lot 2 flag lot and provided waivers from the provisions of Section 14-6-3 of Title 14, (Subdivision Regulations) relative to sidewalks, curbs and gutters, streetlights and street trees. The Ordinance S-833 (as referenced in the Staff Report) includes a condition related to maintaining the privately owned trees.

At their meeting on October 2, 2024, the Planning & Zoning Commission reviewed and

deliberated on the petition. By a vote of 7 to 0, the Planning & Zoning Commission recommended approval of the final plat for the Subdivision Amendment Final Plat as presented. No members of the public spoke to the commission for or against the requested consolidation Plat. The Planning & Zoning Commission discussed the Plat and asked about the reason(s) for the request. The questions were answered to the satisfaction of the Planning & Zoning Commission.

The case file has been included with the Planning & Zoning Commission recommendation letter, both providing additional information and details pertaining to the application.

Recommendation:

Staff recommends that the Village Board concur with the recommendation from the Planning & Zoning Commission to approve the proposed Final Plat for L2KM2 Subdivision and direct the Village Attorney to draft a Resolution for consideration at the next Village Board meeting.

Attachments:

1. 3601 & 3505 Exhibits for BOT

VILLAGE OF OAK BROOK Illinois

BUTLER GOVERNMENT CENTER
1200 OAK BROOK ROAD
OAK BROOK, ILLINOIS 60523

October 15, 2024

Village President and Board of Trustees
Village of Oak Brook
1200 Oak Brook Road
Oak Brook, IL 60523

Subject: L2KM2 Subdivision Amendment – 3601 & 3505 Adams Road

Dear Village President and Board of Trustees:

Background

At its meeting on October 2, 2024, the Planning & Zoning Commission completed its review and deliberations on a petition from Doug Pertz, owner of the properties located at 3601 & 3505 Adams Road, represented by Matt Galas. The L2KM2 Subdivision is seeking approval of a final plat of subdivision in order to adjust the lots lines between the two existing parcels of the Michael E. Scheid Subdivision. Lot 1 will be 152,525 sq. ft. (3.5 acres) and Lot 2 of the L2KM2 Subdivision will be 180,280 sq. ft. (4.14 acres).

In 1999, the Michael E. Scheid Subdivision was approved under Resolution R-715. The subdivision, originally proposed in 1995 (S-833), created the two lots and approved a stormwater variance. The approvals created the Lot 2 flag lot and provided waivers from the provisions of Section 14-6-3 of Title 14, (Subdivision Regulations) relative to sidewalks, curbs and gutters, streetlights and street trees.

The Commission was in receipt of the Village's consulting engineers' review and recommended approval of the proposed final plat.

See the plans and other materials in the case file for additional information regarding the request.

Public Comment

All interested parties were notified of the public meeting. No one spoke in support of or in opposition to the request.

Planning & Zoning Commission Recommendation

By a vote of 7 to 0, the Planning & Zoning Commission recommended approval of the final plat for subject to final engineering approval.

Very truly yours,

_____
Jeffrey Bulin
Acting Chairman
Planning & Zoning Commission

MINUTES OF THE OCTOBER 2, 2024
REGULAR MEETING OF THE
PLANNING & ZONING COMMISSION OF THE
VILLAGE OF OAK BROOK
APPROVED/AMENDED ON , 2024

1. CALL TO ORDER: CALL TO ORDER

The Meeting of the Planning & Zoning Commission was called to order by Acting Chairman Jeff Bulin at 6:30 p.m.

2. ROLL CALL: ROLL CALL

Rama Raman called the roll with the following persons:
PRESENT: Acting Chairman Jeff Bulin, Members Natalie Cappetta, Richard DiBernardo, Rahma Hasan, Baker Nimry, James Pontrelli (arrived at 6:37) and Kenneth Wilczak
IN ATTENDANCE: Trustee Edward Tiesenga, Village Attorney Michale Castaldo III, Director Rebecca Von Drasek and Village Planner Rama Raman

3. APPROVAL OF MINUTES MINUTES

REGULAR PLANNING & ZONING COMMISSION MEETING OF SEPTEMBER 4, 2024 SEPTEMBER 4, 2024

Motion by Member Hasan, seconded by Member Cappetta to approve the minutes of the September 4, 2024 Regular Planning & Zoning Commission meeting as written. VOICE VOTE: Motion Carried.

4. UNFINISHED BUSINESS UNFINISHED BUSINESS

There was no unfinished business.

5. NEW BUSINESS NEW BUSINESS

A. 3601 & 3505 ADAMS ROAD – SUBDIVISION AMENDMENT 3601 & 3505 ADAMS RD – SUBDIVISION AMENDMENT

Acting Chairman Bulin announced the commencement of the public hearing for the petitions and all witnesses testifying were sworn in.

Planner Raman provided an overview of the subdivision amendment.

Matt Galas on behalf of the property owner, Doug Pertz explained that the property was acquired in April and that although they are requesting amending the property

lines, the lots will remain two separate single-family lots. He noted that adjusting the lot line would provide a better scenario to build a home on the back lot and allow saving mature trees.

Member Cappetta mentioned that she lives behind the lot and had no objection to the proposed amendment.

Acting Chairman Bulin asked why the plans showed removing several trees from lot-1. He reminded Mr. Galas to preserve as many trees as possible.

Mr. Galas replied that there were no plans to take down any trees and the house plans have not been designed.

Member Pontrelli questioned any water runoff issues once the lots are amended.

Director Von Drasek explained that moving the lot line and shifting the house on 3505 Adams Road forward minimizes regrading of the lot.

Motioned by Member Hasan, seconded by Member Cappetta to recommend approval of the requested subdivision amendment, subject to the following conditions:

1. All other provisions of Resolution R-715 and covenants will remain in full force and effect.
2. Final engineering approval prior to recording of the Plat.
3. Add the condition "Notwithstanding the attached exhibits, the applicant shall meet all Village Ordinance requirements at the time of building permit application except as specifically varied or waived."

ROLL CALL:
Ayes: 7 – Acting Chairman Bulin, Members Cappetta, DiBernardo, Hasan, Nimry, Pontrelli and Wilczak. Motion carried.
Absent: 2 - Chairman Iyer and Vice Chairman Ziemer

5.

B. <u>100 OAKBROOK CENTER – RIVIAN EV - SETBACK VARIATIONS</u> 100 OBC – RIVIAN EV SETBACK VAR

Director Von Drasek gave a brief overview of the proposed petition.

Mary Goldberg, 56 Overlook Drive, Golf, IL, Senior Manager of Real Estate for Rivian provided a brief background on the Illinois based company. She indicated that existing EV charging stations may be subpar and that Rivian Adventure chargers are designed and built in-house, and she considered them an elevated product. The chargers would be open to any and all EVs if the petition were approved. When searching for the perfect destination, she felt Oak Brook was optimal due highway access and the premium amenities. There are existing EV chargers at Oakbrook Center, but she

INDEX

PAGE	***CONTENTS***
6	Staff Report dated September 24, 2024 and Previous Resolution/Ordinance
5-5.d	Engineering Reviews of L2KM2 Final Plat dated August 19 & September 20, 2024
4	Resident Letter dated September 12, 2024
3	Board of Trustees Referral Meeting Minutes dated September 24, 2024 (not included)
2	Referral Memo Village Board Agenda September 24, 2024
1-1.a	Subdivision Regulations – Plats Required Section 14-3-1 and 14-3-2

****

Application Materials

A	Subdivision Application
B-B.1	Surrounding Property Owners
C	Certification of Surrounding Property Owners
D-D.2	Subject Property Verification
E	Fee/Receipt for Final Plat
F	Final Plat of Subdivision Current Revision dated September 13, 2024
G	Surveys and Engineering Plans

VILLAGE OF OAK BROOK
Planning & Zoning Commission

STAFF REPORT

DATE: September 25, 2024

CASE NO: 2024-13-SR-FP

DESCRIPTION: Subdivision Amendment L2KM2 Subdivision – 7.64 acres – Final Plat

PETITIONERS: Doug Pertz – DJ Legacy Capital LLC & L2M2 Ohana Capital LLC
432 South Prairie, Elmhurst IL 60126

ADDRESS: 3601- 3505 Adams Road – 2 undeveloped residential lots

EXISTING ZONING: R-1, Single-Family Detached Residence District, R-2, Single-Family Detached Residence District

ZONING/USE OF SURROUNDING PROPERTY:

North: R-1 and R-2, Single-Family Detached Residence District, single-family home;

South: R-1 and R-2, Single-Family Detached Residence District, single-family home;

East: R-2, Single-Family Detached Residence District, single-family homes;

West: R-1, Single-Family Detached Residence District, single-family homes.

DISCUSSION: Doug Pertz, the owner of the 7.64 acre parcel known as the L2KM2 Subdivision is seeking approval of a final plat of subdivision in order to adjust the lots lines between the two existing parcels of the Michael E. Scheid Subdivision. Lot 1 will be 152,525 sq. ft. (3.5 acres) and Lot 2 of the L2KM2 Subdivision will be 180,280 sq. ft. (4.14 acres).

In 1999, the Michael E. Scheid Subdivision was approved under Resolution R-715 (attached). The subdivision, originally proposed in 1995 (S-833), created the two lots and approved a stormwater variance. The approvals created the Lot 2 flag lot and provided waivers from the provisions of Section 14-6-3 of Title 14, (Subdivision Regulations) relative to sidewalks, curbs and gutters, streetlights and street trees.

Staff Comments

Please note the following:

1. The property was annexed into the Village of Oak Brook in October of 1962.
2. The 1990 Village of Oak Brook Comprehensive Plan identifies the land use for the subject property as Single-Family Residential.

3. The proposal complies with the minimum lot size and setback requirements for the R-1 Single-Family Detached Residence District and no zoning variations are being requested.
4. The flag lot is preexisting from the 1990's approvals of the original subdivision.
5. The subdivision amendment includes a vacation of existing easements and replacement of easements related to the proposed parcel lines.
6. The Village Engineer has reviewed this submittal and his comments are summarized in the September 20, 2024 memorandum included in the case file.
7. A Subdivision Improvement Agreement (SIA) in accordance with Title 14-4-4 is not required for this subdivision as it is anticipated there will be no required stormwater detention.
8. This property is located in the regulatory floodplain. (See the memorandum from the Village Engineer).

Please see the materials provided by the petitioner in the case file for a more detailed description of this request.

RESPONSIBILITIES OF HEARING BODIES:

The Planning & Zoning (P&Z) Commission has the responsibility to make a recommendation on this the final plat of subdivision to the Village Board.

CONCLUSION:

If the Planning & Zoning Commission is of the opinion that the applicant has satisfied the requirements of the Subdivision Regulations for approval of the final plat, a recommendation would be in order to approve this request as presented, subject to the following:

1. All other provisions of Resolution R-715 and covenants will remain in full force and effect.
2. Final engineering approval prior to recording of the Plat.
3. Add the condition "Notwithstanding the attached exhibits, the applicant shall meet all Village Ordinance requirements at the time of building permit application except as specifically varied or waived."

Respectfully Submitted,

Rebecca Von Drasek
Director of Development Services

R-715

RESOLUTION 98-SD-FP-EX1-R-715

**A RESOLUTION AMENDING 95-SD-R-658
TO CHANGE THE NAME OF A SUBDIVISION FROM
JOHN R. MITCHELL SUBDIVISION TO MICHAEL E. SCHEID SUBDIVISION
AND APPROVING AN AMENDED FINAL PLAT**

(3601 Adams Road, Oak Brook, IL 60523)

WHEREAS, Resolution 95-SD-R-658 was approved on November 28, 1995 for the John R. Mitchell Subdivision, a two-lot subdivision located at 3601 Adams Road, Oak Brook, Illinois; and

WHEREAS, Michael E. Scheid has assumed the Mitchell Subdivision Final Plat application and acquired interest in all of the engineering and plat plans heretofore developed; and

WHEREAS, Michael E. Scheid wishes to change the name of the subdivision to the Michael E. Scheid Subdivision and to adjust the lot lines between the two lots to a minor extent; and

WHEREAS, the Village President and Board of Trustees considered the recommendation of staff and concur with the same, subject to certain conditions;

NOW, THEREFORE, BE IT RESOLVED BY THE PRESIDENT AND BOARD OF TRUSTEES OF THE VILLAGE OF OAK BROOK, DU PAGE AND COOK COUNTIES, ILLINOIS as follows:

Section 1: That the Michael E. Scheid Subdivision Final Plat consisting of two sheets and prepared by Bollinger, Lach & Associates, Inc., dated as last revised November 1, 1998, be and is hereby approved subject to the conditions enumerated in Section 2 of this Resolution.

Section 2: That the approval of the Final Plat of Michael E. Scheid Subdivision as given in Section 1 hereof be and is hereby expressly made subject to the following conditions:

(a) That the requirements for sidewalks, curb and gutters, street lights and street trees be waived.

(b) That the final plat and final engineering be revised and approved by the Village Engineer.

(c) That all plat requirements be completed within a period of six months from the passage of this resolution.

Section 3: That this Resolution is limited and restricted to the property located at 3601 Adams Road, Oak Brook, Illinois, which property is legally described in Exhibit A attached.

Section 4: This resolution shall be in full force and effect from and after its passage and approval as provided by law.

R-715

PASSED AND APPROVED this 8th day of December, 1998 by the President and Board of Trustees of the Village of Oak Brook, DuPage and Cook Counties, Illinois, according to a roll call vote as follows:

Ayes: Trustees Caleel, Kenny, McInerney, Savino and Shumate

Nays: None

Absent: Trustee Bartecki

Abstain: None

Karen M. Bushy
Village President pro tem

ATTEST:

Linda K. Gunsella
Village Clerk

R-715

EXHIBIT A
LEGAL DESCRIPTION
(3601 Adams Road, Oak Brook, Illinois 60523)

The North 347.45 feet, as measured on the East line and on the West line of the following described tract of land to wit: that part of the Southeast Quarter of Section 35, Township 39 North, Range 11 East of the Third Principal Meridian, described by commencing at the quarter section post in the East line of said Section 35, and running thence South 1056.0 feet to the Southeast corner of land formerly owned by D. Tallmadge; thence West 825.0 feet to the Northwest corner of land owned by Greenup H. Butler for a place of beginning; thence West 495.0 feet to the division line of said quarter, thence North along said division line 615.78 feet to land formerly owned by R. Reed and now owned by Edward Opler; thence East along said Reed (now Opler) South line 706.86 feet to the Northwest corner of land formerly owned by W. Burbank; thence South along said Burbank West line 615.78 feet to the Butlers North line; thence West 211.86 feet to the place of beginning; also the North 347.45 feet as measured on the East line and on the West line of the West 283.14 feet of the East 613.14 feet of the South 615.78 feet of the North 1056.0 feet of the Northeast Quarter of the Southeast Quarter of Section 35, Township 39 North, Range 11 East of the Third Principal Meridian in DuPage County, IL. PIN 06-35-401-002.

R-715

STATE OF ILLINOIS)
) SS.
COUNTIES OF COOK AND DU PAGE)

I, Linda K. Gonnella, do hereby certify that I am the duly elected and acting Village Clerk of the Village of Oak Brook, DuPage and Cook Counties, Illinois.

I DO FURTHER CERTIFY that on December 8, 1998, the corporate authorities of the above municipality passed and approved Resolution 98-SD-FP-EX1-R-715

A RESOLUTION AMENDING 95-SD-R-658 TO CHANGE THE NAME OF A SUBDIVISION FROM JOHN R. MITCHELL SUBDIVISION TO MICHAEL E. SCHEID SUBDIVISION AND APPROVING AN AMENDED FINAL PLAT (3601 Adams Road, Oak Brook, IL 60523)

I DO FURTHER CERTIFY that the original documents, of which the annexed copy is a true copy, is entrusted to my care for safekeeping and I am the keeper of the same.

I DO FURTHER CERTIFY that I am the keeper of the records, journals, entries, resolutions, ordinances and documents of the said Village of Oak Brook, DuPage and Cook Counties, Illinois.

IN WITNESS WHEREOF, I have hereunto set my hand and affixed the corporate seal of the Village of Oak Brook this 18th day of October, 1999.

VILLAGE OF OAK BROOK DU PAGE COUNTY, ILLINOIS

Linda K. Gonnella
Village Clerk
Village of Oak Brook
DuPage and Cook Counties, IL

R-715

J.P. "RICK" CARNEY
DUPAGE COUNTY RECORDER
OCT.28,1999 3:52 PM
OTHER 06-35-401-002
005 PAGES R1999-228915

(Above Space For Recorder's Office Only)

VILLAGE OF OAK BROOK
1200 Oak Brook Road
Oak Brook, Illinois 60523-2255

RECORDED DOCUMENT TITLE PAGE

Title of Document RESOLUTION 98-SD-FP-EX1-R-715 A RESOLUTION AMENDING 95-SD-R-658 TO CHANGE THE NAME OF A SUBDIVISION FROM JOHN R. MITCHELL SUBDIVISION TO MICHAEL E. SCHEID SUBDIVISION AND APPROVING AN AMENDED FINAL PLAT (3601 Adams Road, Oak Brook, IL 60523)

Property Address/es 3601 ADAMS ROAD, OAK BROOK, IL 60523
(If vacant land, state vacant land and list nearest cross streets, Oak Brook, IL 60523.)

Pin/s Number 06-35-401-002
Name & Address of Applicant MICHAEL E. SCHEID, 385 MAY STREET, ELMHURST, IL 60126

Name & Address of Responsible Party to Receive Recorded Document and Billing: MICHAEL E. SCHEID
385 MAY STREET, ELMHURST, IL 60126
G/L Account # to be Charged 10-1365

Prepared By: Village of Oak Brook
1200 Oak Brook Road
Oak Brook, Illinois 60523

Return To: Village of Oak Brook
1200 Oak Brook Road
Oak Brook, Illinois 60523

Name & Address of Recipient of Consideration (when applicable): N/A
G/L Account # to be Charged

W/R-715

ORDINANCE 95-ZO-V-DU-SWM+FP-S-833

AN ORDINANCE GRANTING A VARIANCE FROM THE

DU PAGE COUNTY COUNTYWIDE STORMWATER AND FLOOD PLAIN ORDINANCE

(3601 ADAMS ROAD)

WHEREAS, as a result of the flooding that occurred in DuPage County during the mid to late 1960's, DuPage County and all DuPage municipalities created the DuPage County Countywide Stormwater and Flood Plain Ordinance (the "Ordinance"); and

WHEREAS, the Ordinance was adopted by DuPage County in 1991 and subsequently by the Village of Oak Brook, as a full waiver community; and

WHEREAS, as a full waiver community, the Village has the responsibility for administration of the Ordinance within its corporate limits; and

WHEREAS, an application has been filed requesting a variance from the provisions of Article 9 of the DuPage County Countywide Stormwater and Flood Plain Ordinance, to exempt the applicant's property from the requirements for stormwater detention; and

WHEREAS, a public hearing on such application has been conducted on August 1, 1995 by the Zoning Board of Appeals of the Village sitting as the Village's Oversight Committee to oversee the implementation and enforcement of the Ordinance, pursuant to due and appropriate legal notice; and

WHEREAS, in its report dated August 3, 1995, the Zoning Board of Appeals made its findings and recommendation to approve the petition; the applicant's professional engineer testified that in his opinion, the omission of detention on this property would not increase flood risk for downstream properties to any appreciable extent; rather the abundance of trees on the property provides natural storage through absorption rather than run off; and

WHEREAS, the requested variance allows the preservation of the forested character of the subject property and strict enforcement of the DuPage Ordinance will create an undue hardship on the owner and would, according to the applicant's professional engineer, require the destruction of 1.4 acres of trees as required by the Ordinance; and

WHEREAS, the subject property is unique, as it is steeply sloped, highly wooded, and lies near Salt Creek, with a tributary of the creek running through it. Stormwater runoff into the tributary occurs rapidly, long before the peak period of flooding. If detention were to be provided, it would release runoff gradually and actually increase the runoff at the peak flow period; and

WHEREAS, the corporate authorities of the Village of Oak Brook deem the passage of this Ordinance to be in the best interest and in furtherance of the general welfare of the Village of Oak Brook;

NOW, THEREFORE, BE IT ORDAINED BY THE PRESIDENT AND BOARD OF TRUSTEES OF THE VILLAGE OF OAK BROOK, DU PAGE AND COOK COUNTIES, ILLINOIS as follows:

W/R-715

Section 1: That the provisions of the preamble hereinabove set forth are hereby adopted as though fully set forth herein.

Section 2: That a variance is hereby granted from the provisions of Article 9 of the DuPage County Countywide Stormwater and Flood Plain Ordinance to exempt the property at 3601 Adams Road, in the Mitchell Subdivision, which property is legally described as follows:

> The North 347.45 feet, as measured on the East line and on the West line of the following described tract of land to wit: that part of the Southeast Quarter of Section 35, Township 39 North, Range 11 East of the Third Principal Meridian, described by commencing at the quarter section post in the East line of said Section 35, and running thence South 1056.0 feet to the Southeast corner of land formerly owned by D. Tallmadge; thence West 825.0 feet to the Northwest corner of land owned by Greenup H. Butler for a place of beginning; thence West 495.0 feet to the division line of said quarter, thence North along said division line 615.78 feet to land formerly owned by R. Reed and now owned by Edward Opler; thence East along said Reed (now Opler) South line 706.86 feet to the Northwest corner of land formerly owned by W. Burbank; thence South along said Burbank West line 615.78 feet to the Butlers North line; thence West 211.86 feet to the place of beginning; also the North 347.45 feet as measured on the East line and on the West line of the West 283.14 feet of the East 613.14 feet of the South 615.78 feet of the North 1056.0 feet of the Northeast Quarter of the Southeast Quarter of Section 35, Township 39 North, Range 11 East of the Third Principal Meridian in DuPage County, IL. PIN 06-35-401-002.

Section 3: That the variance herein granted in Section 2 of this Ordinance is expressly subject to the following conditions:

(1) That the property be developed as a two-lot single-family detached subdivision.

(2) That the wooded character of both newly created lots be protected by covenants running with the land.

(3) That the impervious area of each lot be not more than 33% or one acre, whichever is less.

(4) That the owner provide an impact statement from a professional engineering firm which finds that the subdivision will have no undue, adverse impact on surrounding property.

Section 4: That this ordinance shall be in full force and effect from and after passage and approval pursuant to law.

PASSED THIS 28th day of November, 1995.

W/R-715

Ayes: Trustees Bartecki, Kenny, McInerney, Savino and Shumate

Nays: None

Absent: Trustee Pavovich

Abstain: None

APPROVED THIS 28th day of November, 1995.

Karen M. Bushy
Village President

ATTEST:

Linda K Connelly
Village Clerk

Approved as to Form:

Richard A. DMartens
Village Attorney

Published _____
Date Paper

Not Published XX

Applicant: John & Sue Mitchell
Address: 7030 Seminole Drive
Darien, IL 60561

PIN 06-35-401-002

A-4-4-44

PI No. 06-35-401-002

MICHAEL E. SCHEID SUBDIVISION

BEING A SUBDIVISION OF PART OF SECTION 35, TOWNSHIP 39 NORTH, RANGE 11 EAST OF THE THIRD PRINCIPAL MERIDIAN, IN DuPAGE COUNTY, ILLINOIS.

MICHAEL E. SCHEID SUBDIVISION
3601 ADAMS ROAD
OAK BROOK, IL 60523
PIN # 06-35-401-002

PREPARED AND SUBMITTED BY:
VILLAGE OF OAK BROOK
1200 OAK BROOK RD.
OAK BROOK,
IL 60523

RETURN TO:
VILLAGE OF OAK BROOK
1200 OAK BROOK RD.
OAK BROOK,
IL 60523

BOOK-194
PAGE-30

PLAT
R1999-228916
OCT. 28. 1999
3:52 PM

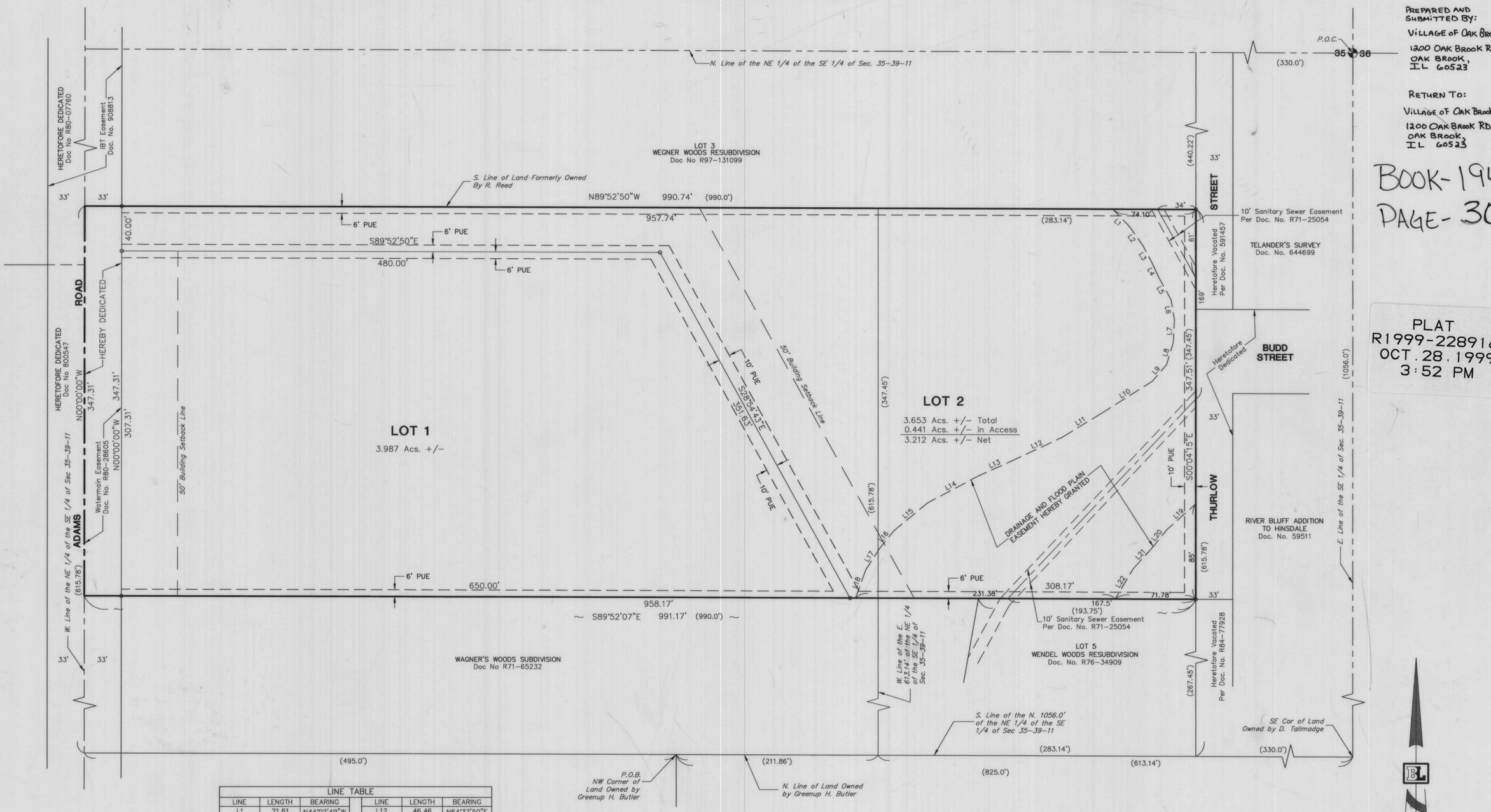

LINE TABLE					
LINE	LENGTH	BEARING	LINE	LENGTH	BEARING
L1	21.61	N44°02'49"W	L12	46.46	N64°37'50"E
L2	20.84	N35°13'16"W	L13	36.20	N65°39'10"E
L3	17.02	N28°05'55"W	L14	50.67	N62°00'35"E
L4	14.34	N24°48'38"W	L15	39.24	N50°19'32"E
L5	22.86	N28°50'05"W	L16	19.18	N38°40'04"E
L6	18.26	N09°31'40"W	L17	23.82	N33°00'47"E
L7	20.02	N02°47'31"E	L18	26.54	N19°45'04"E
L8	20.86	N16°38'42"E	L19	34.35	N48°16'53"E
L9	19.69	N40°55'49"E	L20	19.18	N38°40'04"E
L10	52.23	N57°36'07"E	L21	26.86	N42°00'24"E
L11	42.12	N58°38'49"E	L22	31.46	N30°43'52"E

GRAPHIC SCALE
40 0 20 40 80
(IN FEET)
1 inch = 40 ft.

LEGEND

o	Iron Pipe Set
PUE	Public Utility Easement
(0.00')	Denotes Record Data
0.00'	Denotes Measured Data

REVISED : 12-22-98
REVISED : 11-01-98
PREPARED : 10-30-98

R1999-228916

SHEET 1 OF 2 SHEETS

CONSULTING ENGINEERS & LAND SURVEYORS

Bollinger, Lach & Associates, Inc.
1010 JORIE BLVD OAK BROOK, IL 60523 630 990 1385

DRAWN: GBE | CHKD: | FB: | RF: | DISK: | JOB: 558-000

PI No. 06-35-401-002

A-4-4-44

MICHAEL E. SCHEID SUBDIVISION
3601 ADAMS ROAD
OAK BROOK, IL 60523
PIN# 06-35-401-002

MICHAEL E. SCHEID SUBDIVISION

BEING A SUBDIVISION OF PART OF SECTION 35, TOWNSHIP 39 NORTH, RANGE 11 EAST OF THE THIRD PRINCIPAL MERIDIAN, IN DuPAGE COUNTY, ILLINOIS.

DRAINAGE AND FLOOD PLAIN EASEMENT

A NON-EXCLUSIVE PERPETUAL EASEMENT IS HEREBY RESERVED FOR AND GRANTED TO THE VILLAGE OF OAK BROOK AND ITS SUCCESSORS AND ASSIGNS WITHIN THE AREA ON THE PLAT MARKED "DRAINAGE AND FLOOD PLAIN EASEMENT". SAID EASEMENT SHALL BE FOR DRAINAGE AND STORM WATER RUNOFF AND FOR TEMPORARILY STORING EXCESS STORM WATER RUNOFF AND FLOOD WATERS. THE OWNERS, SUCCESSORS AND ASSIGNS OF LOT 2 SHALL GRANT TO THE VILLAGE SUCH ACCESS AS NECESSARY ACROSS LOT 2 FOR INSPECTING THE DRAINAGE AND FLOOD PLAIN EASEMENT AREA. PLACEMENT OF ANY MATERIAL (HEREINAFTER CALLED "OBSTRUCTION") WITHIN THIS EASEMENT AREA IS PROHIBITED UNLESS SPECIFICALLY PERMITTED BY THE VILLAGE. IF PLACEMENT OF ANY MATERIAL IS ACCOMPLISHED WITHOUT VILLAGE APPROVAL, THE OWNER OF THE PROPERTY ENCOMPASSING THE EASEMENT AREA SHALL REMOVE SUCH OBSTRUCTION WITHIN TEN (10) DAYS AFTER WRITTEN NOTICE FROM THE VILLAGE. IF SUCH OWNER FAILS TO REMOVE SUCH OBSTRUCTION UPON TEN (10) DAYS NOTICE, THE VILLAGE SHALL HAVE THE RIGHT TO UNDERTAKE SUCH REMOVAL AND, UPON COMPLETION, TO BE REIMBURSED FOR ALL OUT-OF-POCKET COSTS AND EXPENSES INCURRED IN CONNECTION WITH SUCH REMOVAL WITHIN THIRTY (30) DAYS FROM THE DATE OF SUCH COSTS OR EXPENSES. FAILURE OF ANY SUCH OWNER TO MAKE REIMBURSEMENT SHALL AUTHORIZE THE VILLAGE TO PLACE LIENS AGAINST PROPERTY OF THE AFFECTED OWNER FOR ITS COSTS INCURRED THEREIN AND TO ENFORCE SAID LIENS THROUGH ANY APPROPRIATE AND AVAILABLE LEGAL PROCEEDINGS EITHER AT LAW OR IN EQUITY.

DRAINAGE CERTIFICATE

STATE OF ILLINOIS)
SS
COUNTY OF DUPAGE)

TO THE BEST OF OUR KNOWLEDGE AND BELIEF THE DRAINAGE OF SURFACE WATERS WILL NOT BE CHANGED BY THE CONSTRUCTION OF SUCH SUBDIVISION OR ANY PART THEREOF, OR, THAT IF SUCH SURFACE WATER DRAINAGE WILL BE CHANGED, REASONABLE PROVISION HAS BEEN MADE FOR COLLECTION AND DIVERSION OF SUCH SURFACE WATER INTO PUBLIC AREAS, OR DRAINS WHICH THE SUBDIVIDER HAS A RIGHT TO USE, AND THAT SUCH SURFACE WATERS WILL BE PLANNED FOR IN ACCORDANCE WITH GENERALLY ACCEPTED ENGINEERING PRACTICES SO AS TO REDUCE THE LIKELIHOOD OF DAMAGE TO THE ADJOINING PROPERTY BECAUSE OF THE CONSTRUCTION OF THE SUBDIVISION.

DATED THIS 22ND DAY OF JANUARY, A.D. 1999.

John M. Whitt — ENGINEER LINDLEY & SONS, INC.

Michael E. Scheid — OWNER OR ATTORNEY

JOHN M. WHITT 40146

SANITARY DISTRICT CERTIFICATE

STATE OF ILLINOIS)
SS
COUNTY OF DUPAGE)

I, Carl T. Blomgren, SECRETARY OF THE HINSDALE SANITARY DISTRICT, DUPAGE COUNTY, ILLINOIS, HEREBY CERTIFY THAT THERE ARE NO DELINQUENT OR UNPAID CURRENT OR FORFEITED SPECIAL ASSESSMENTS OR ANY DEFERRED INSTALLMENTS THEREOF THAT HAVE BEEN CONFIRMED AGAINST THE TRACT OF LAND INCLUDED IN THE PLAT.

DATED AT Burr Ridge, ILLINOIS, THIS ___ DAY OF January, A.D. 1999.

SECRETARY

HINSDALE SANITARY DISTRICT CORPORATE SEAL DUPAGE COUNTY, ILLINOIS

COUNTY CLERK CERTIFICATE

STATE OF ILLINOIS)
SS
COUNTY OF DUPAGE)

I, Gary A King, COUNTY CLERK OF DUPAGE COUNTY, ILLINOIS DO HEREBY CERTIFY THAT THERE ARE NO DELINQUENT GENERAL TAXES, NO UNPAID FORFEITED TAXES, AND NO REDEEMABLE TAX SALES AGAINST ANY OF THE LAND INCLUDED IN THE ANNEXED PLAT.

GIVEN UNDER MY HAND AND SEAL AT WHEATON, DUPAGE COUNTY, ILLINOIS, THIS 28th DAY OF October, A.D. 1999.

Gary A King — COUNTY CLERK

COUNTY RECORDER'S CERTIFICATE

STATE OF ILLINOIS)
SS
COUNTY OF DUPAGE)

THIS INSTRUMENT R1999-228916 WAS FILED FOR RECORD IN THE RECORDER'S OFFICE OF DUPAGE COUNTY, ILLINOIS ON THE 28th DAY OF October A.D. 1999 AT 3:52 O'CLOCK P.M. AND WAS RECORDED IN BOOK 194 OF PLATS PAGE 30.

J P Carney — RECORDER OF DEEDS

SUBJECT PROPERTY SCHOOL DISTRICTS

STATE OF ILLINOIS
SS
COUNTY OF DuPage

TO THE BEST OF MY KNOWLEDGE AND BELIEF, THE PROPERTY DESCRIBED HEREON IS SITUATED WITHIN GRADE SCHOOL DISTRICT 53, HIGH SCHOOL DISTRICT 86 AND COMMUNITY COLLEGE DISTRICT 502 (COLLEGE OF DuPAGE)

DATED THIS 22ND DAY OF January, 1999.

BY: Michael E. Scheid — OWNER

STATE OF ILLINOIS
SS
COUNTY OF DuPage

I, THE UNDERSIGNED, A NOTARY PUBLIC IN AND FOR THE COUNTY IN THE STATE AFORESAID, DO HEREBY CERTIFY THAT Michael E. Scheid, PERSONALLY KNOWN TO ME TO BE THE SAME PERSON WHOSE NAME IS SUBSCRIBED TO THE FOREGOING INSTRUMENT, APPEARED BEFORE ME THIS DAY IN PERSON AND ACKNOWLEDGED THAT THEY SIGNED AND DELIVERED THE ABOVE INSTRUMENT AS THEIR OWN FREE AND VOLUNTARY ACT AND DEED FOR THE USES AND PURPOSES THEREIN SET FORTH.

GIVEN UNDER MY HAND AND NOTARIAL SEAL THIS 22nd DAY OF January, 1999.

Susan M. Zelenka — NOTARY PUBLIC

"OFFICIAL SEAL"
SUSAN M ZELENKA
Notary Public, State of Illinois
My Commission Expires 02/08/02

CERTIFICATE AS TO SPECIAL ASSESSMENTS

STATE OF ILLINOIS)
SS
COUNTY OF DUPAGE)

I, Darrell Langlois, VILLAGE TREASURER OF THE VILLAGE OF OAK BROOK, DO HEREBY CERTIFY THAT THERE ARE NO DELINQUENT OR UNPAID CURRENT OR FORFEITED SPECIAL ASSESSMENTS OR ANY DEFERRED INSTALLMENTS THEREOF THAT HAVE BEEN APPORTIONED AGAINST THE TRACT OF LAND INCLUDED IN THE PLAT.

DATED AT OAK BROOK, DUPAGE COUNTY, ILLINOIS THIS 24th DAY OF August, A.D. 1999.

Darrell J Langlois — TREASURER

VILLAGE CLERK'S CERTIFICATE

STATE OF ILLINOIS)
SS
COUNTY OF DUPAGE)

I, Linda K Gonnella, VILLAGE CLERK OF THE VILLAGE OF OAK BROOK, ILLINOIS, HEREBY CERTIFY THAT THE ANNEXED PLAT WAS PRESENTED TO AND BY RESOLUTION DULY APPROVED BY THE VILLAGE BOARD OF SAID VILLAGE AT ITS MEETING HELD ON December 8, A.D. 1998, AND THAT THE REQUIRED BOND OR OTHER GUARANTEE HAS BEEN POSTED FOR THE COMPLETION OF THE IMPROVEMENTS REQUIRED BY THE REGULATIONS OF SAID VILLAGE.

IN WITNESS WHEREOF I HAVE HERETO SET MY HAND AND THE SEAL OF THE VILLAGE OF OAK BROOK, ILLINOIS, THIS 24th DAY OF August, A.D. 1999.

Linda K Gonnella — VILLAGE CLERK

VILLAGE OF OAK BROOK DU PAGE COUNTY, ILLINOIS

PLAN COMMISSION CERTIFICATE

STATE OF ILLINOIS)
SS
COUNTY OF DUPAGE)

APPROVED BY THE PLAN COMMISSION OF THE VILLAGE OF OAK BROOK, DUPAGE COUNTY, ILLINOIS, THIS 16TH DAY OF OCTOBER, A.D. 1995.

CHAIRMAN

VILLAGE ENGINEER'S CERTIFICATE

STATE OF ILLINOIS)
SS
COUNTY OF DUPAGE)

I, DALE L. DURFEY, JR., VILLAGE ENGINEER OF THE VILLAGE OF OAK BROOK, ILLINOIS, HEREBY CERTIFY THAT THE LAND IMPROVEMENTS DESCRIBED IN THE ANNEXED PLAT AND THE PLANS AND SPECIFICATIONS THEREFOR MEET THE MINIMUM REQUIREMENTS OF SAID VILLAGE AND HAVE BEEN APPROVED BY ALL PUBLIC AUTHORITIES HAVING JURISDICTION THEREOF.

DATED AT OAK BROOK, DUPAGE COUNTY, ILLINOIS THIS 7TH DAY OF OCTOBER, A.D. 1999.

Dale L Durfey Jr — VILLAGE ENGINEER

DALE L. DURFEY, JR. 34462 REGISTERED PROFESSIONAL ENGINEER OF ILLINOIS

OWNER'S CERTIFICATE

STATE OF ILLINOIS) SS COUNTY OF DUPAGE)

THIS IS TO CERTIFY THAT Chicago Title and Trust Co IS THE OWNER OF ALL OF THE LAND DESCRIBED IN THE ANNEXED PLAT AND HAS CAUSED THE SAME TO BE SURVEYED AND SUBDIVIDED, AS INDICATED THEREON, FOR THE USES AND PURPOSES THEREIN SET FORTH, AND DOES HEREBY ACKNOWLEDGE AND ADOPT THE SAME UNDER THE STYLE AND TITLE THEREON INDICATED.

THE UNDERSIGNED HEREBY DEDICATES FOR PUBLIC USE THE LANDS SHOWN ON THIS PLAT FOR THOROUGHFARES, STREETS, ALLEYS AND PUBLIC SERVICES; AND HEREBY ALSO RESERVES FOR AND GRANTS EASEMENTS FOR PUBLIC USE AND FOR THE INSTALLATION OF VARIOUS PUBLIC UTILITIES AS DESIGNATED AND/OR AS STATED IN THE UTILITY EASEMENT PROVISIONS WHICH ARE STATED HEREON.

ALL EASEMENTS INDICATED AS PUBLIC UTILITY EASEMENTS (PUE) ON THIS PLAT ARE RESERVED FOR AND GRANTED TO THE VILLAGE OF OAK BROOK AND TO THOSE PUBLIC UTILITY COMPANIES OPERATING UNDER FRANCHISE FROM THE VILLAGE OF OAK BROOK, INCLUDING BUT NOT LIMITED TO HINSDALE SANITARY DISTRICT, ILLINOIS BELL TELEPHONE COMPANY, NORTHERN ILLINOIS GAS COMPANY, COMMONWEALTH EDISON COMPANY, AND THEIR SUCCESSORS AND ASSIGNS FOR THE PERPETUAL RIGHT, PRIVILEGE AND AUTHORITY TO CONSTRUCT, RECONSTRUCT, REPAIR, INSPECT, MAINTAIN AND OPERATE VARIOUS UTILITY, TRANSMISSION AND DISTRIBUTION SYSTEMS INCLUDING STORM AND/OR SANITARY SEWERS TOGETHER WITH ANY AND ALL NECESSARY MANHOLES, CATCH BASINS, CONNECTIONS, APPLIANCES AND OTHER STRUCTURES AND APPURTENANCES AS MAY BE DEEMED NECESSARY BY SAID VILLAGE, OVER, UPON, ALONG, UNDER AND THROUGH SAID INDICATED EASEMENTS, TOGETHER WITH RIGHT OF ACCESS ACROSS THE PROPERTY, FOR NECESSARY MEN AND EQUIPMENT TO DO ANY OF THE ABOVE WORK AND THE RIGHT IS ALSO GRANTED TO CUT DOWN, TRIM, OR REMOVE ANY TREES, SHRUBS AND OTHER PLANTS ON THE EASEMENT THAT INTERFERE WITH THE OPERATION OF SEWERS OR OTHER UTILITIES. NO PERMANENT BUILDINGS SHALL BE PLACED ON SAID EASEMENTS, BUT SAME MAY BE USED FOR GARDENS, SHRUBS, LANDSCAPING AND OTHER PURPOSES THAT DO NOT THEN OR LATER INTERFERE WITH THE AFORESAID USES OR RIGHTS. WHENEVER THE VILLAGE OR AFFECTED UTILITY COMPANY DETERMINE THAT ANY TREES, SHRUBS, OTHER VEGETATION OR OBJECTS (HEREINAFTER COLLECTIVELY KNOWN AS "OBSTRUCTION") ON SAID EASEMENTS INTERFERE WITH THE AFORESAID USES OR RIGHTS, THE VILLAGE OR UTILITY COMPANY HAS THE RIGHT, BUT NOT THE OBLIGATION TO REMOVE THE OBSTRUCTION AT THE OWNER'S EXPENSE. THE VILLAGE OR AFFECTED UTILITY COMPANY SHALL APPLY GRASS SEED WHERE THE OBSTRUCTION HAS BEEN REMOVED, BUT IS NOT REQUIRED TO REPLACE OR REPAIR ANY OBSTRUCTION. LOCATION OF UTILITY INSTALLATIONS WITHIN THE EASEMENT SHALL BE SUBJECT TO THE APPROVAL OF THE VILLAGE OF OAK BROOK, AS TO DESIGN AND LOCATION. ALL INSTALLATIONS ARE SUBJECT TO THE ORDINANCES OF THE VILLAGE OF OAK BROOK.

DATED THIS 6 DAY OF January, A.D. 1999.

BY: John T. Shutack ATTEST: Beneficiary of Trust # 1088680

BY: ______ ATTEST: ______

STATE OF ILLINOIS
SS
COUNTY OF DU PAGE

I, THE UNDERSIGNED, A NOTARY PUBLIC IN AND FOR THE COUNTY IN THE STATE AFORESAID, DO HEREBY CERTIFY THAT JOHN T SHUTACK Beneficiary of Trust # 1088680 PERSONALLY KNOWN TO ME TO BE THE SAME PERSON WHOSE NAME IS SUBSCRIBED TO THE FOREGOING INSTRUMENT, APPEARED BEFORE ME THIS DAY IN PERSON AND ACKNOWLEDGED THAT THEY SIGNED AND DELIVERED THE ABOVE INSTRUMENT AS THEIR OWN FREE AND VOLUNTARY ACT AND DEED FOR THE USES AND PURPOSES THEREIN SET FORTH.

GIVEN UNDER MY HAND AND NOTARIAL SEAL THIS 6TH DAY OF JANUARY, 1999.

Barbara Miller — NOTARY PUBLIC

"OFFICIAL SEAL"
BARBARA MILLER
Notary Public, State of Illinois
My Commission Expires 6/29/99

STATE OF ILLINOIS)
SS
COUNTY OF DUPAGE)

THIS IS TO CERTIFY THAT WE, BOLLINGER, LACH & ASSOCIATES, INC., ILLINOIS, PROFESSIONAL LAND SURVEYOR CORPORATION NO. 30, HAVE SURVEYED AND SUBDIVIDED THE FOLLOWING DESCRIBED PROPERTY:

THE NORTH 347.45 FEET, AS MEASURED ON THE EAST LINE AND ON THE WEST LINE OF THE FOLLOWING DESCRIBED TRACT OF LAND TO WIT: THAT PART OF THE SOUTHEAST QUARTER OF SECTION THIRTY FIVE (35), TOWNSHIP THIRTY NINE (39) NORTH, RANGE ELEVEN (11) EAST OF THE THIRD PRINCIPAL MERIDIAN, DESCRIBED BY COMMENCING AT THE QUARTER SECTION POST IN THE EAST LINE OF SAID SECTION THIRTY-FIVE (35), AND RUNNING THENCE SOUTH 1056.0 FEET TO THE SOUTHEAST CORNER OF LAND FORMALLY OWNED BY D. TALLMADGE; THENCE WEST 825.0 FEET TO THE NORTHWEST CORNER OF LAND OWNED BY GREENUP H. BUTLER FOR A PLACE OF BEGINNING; THENCE WEST 495.0 FEET TO THE DIVISION LINE OF SAID QUARTER; THENCE NORTH ALONG SAID DIVISION LINE 615.78 FEET TO LAND FORMERLY OWNED BY R. REED AND NOW OWNED BY EDWARD OPLER; THENCE EAST ALONG SAID REED (NOW OPLER) SOUTH LINE 706.86 FEET TO THE NORTHWEST CORNER OF LAND FORMERLY OWNED BY W. BURBANK; THENCE SOUTH ALONG SAID BURBANK WEST LINE 615.78 FEET TO THE BUTLERS NORTH LINE; THENCE WEST 211.86 FEET TO THE PLACE OF BEGINNING; ALSO THE NORTH 347.45 FEET AS MEASURED ON THE EAST LINE AND ON THE WEST LINE OF THE WEST 283.14 FEET OF THE EAST 613.14 FEET OF THE SOUTH 615.78 FEET OF THE NORTH 1056.0 FEET OF THE NORTHEAST QUARTER OF THE SOUTHEAST QUARTER OF SECTION 35, TOWNSHIP 39 NORTH, RANGE 11 EAST OF THE THIRD PRINCIPAL MERIDIAN, IN DUPAGE COUNTY, ILLINOIS.

SAID PARCEL OF LAND HEREIN DESCRIBED CONTAINS 7.903 ACRES, MORE OR LESS.

AS SHOWN IN THE ANNEXED PLAT WHICH IS A CORRECT REPRESENTATION OF SAID SURVEY AND SUBDIVISION. ALL DISTANCES ARE SHOWN IN FEET AND DECIMALS THEREOF. WE FURTHER CERTIFY THAT ALL REGULATIONS ENACTED BY THE PRESIDENT AND BOARD OF TRUSTEES OF THE VILLAGE OF OAK BROOK RELATIVE TO PLATS AND SUBDIVISIONS HAVE BEEN COMPLIED WITH IN THE PREPARATION OF THIS PLAT. WE FURTHER CERTIFY THAT THE LAND IS WITHIN THE VILLAGE OF OAK BROOK WHICH HAS ADOPTED A VILLAGE COMPREHENSIVE PLAN AND MAP AND IS EXERCISING THE SPECIAL POWERS AUTHORIZED BY DIVISION 12 OF ARTICLE 11 OF THE ILLINOIS MUNICIPAL CODE AS AMENDED. WE FURTHER CERTIFY THAT PART OF THE PROPERTY SHOWN IN THIS PLAT IS LOCATED WITHIN A SPECIAL FLOOD HAZARD AREA AS IDENTIFIED BY THE FEDERAL EMERGENCY MANAGEMENT AGENCY, AS SHOWN ON COMMUNITY PANEL NUMBER 170214 0004 B, EFFECTIVE DATE: FEBRUARY 18, 1981.

GIVEN UNDER OUR HAND AND SEAL AT OAK BROOK, ILLINOIS, THIS 23rd DAY OF December, A.D. 1998

BOLLINGER, LACH & ASSOCIATES, INC.
ILLINOIS PROFESSIONAL LAND SURVEYOR
CORPORATION NO. 30.

BOLLINGER, LACH AND ASSOC. INC. PROFESSIONAL LAND SURVEYOR CORPORATION NO. 30 ILLINOIS

REVISED : 12-22-98
REVISED : 11-01-98
PREPARED : 10-30-98

R1999-228916

SHEET 2 OF 2 SHEETS	CONSULTING ENGINEERS & LAND SURVEYORS	Bollinger,Lach & Associates,Inc. 1010 JORIE BLVD OAK BROOK, IL 60523 630 990 1385				
DRAWN: GBE	CHKD:	FB:	RF:	DISK:	JOB: 558-000	

September 20, 2024

Ms. Rebecca Von Drasek
Development Services Director
Village of Oak Brook
1200 Oak Brook Road
Oak Brook, Illinois 60523

Project	Case No.	Review No.	Status
3601 Adams Road	2024 13 SR FP	2	Not Approved

EZA Engineering received the following permit submittal documents on September 13, 2024:

Document	Prepared By	Sheets	Date
L2KM2 Subdivision	Ridgeline Consultants	3	9-13-24
Preliminary Engineering Plan	Ridgeline Consultants	4	8-6-24

The above documents have been reviewed for compliance with the Village Code of Oak Brook (Village Code) and the Village of Oak Brook Stormwater and Flood Plain Ordinance (VOBSFPO). Please consider the following comments:

GENERAL COMMENTS

1. This application may be considered for a Final Plat of Subdivision without the typical requirement for a Preliminary Plat of Subdivision. A response to this comment is not necessary.
2. In accordance with Title 14-6-3.D.4 and Title 9-9-2.A.1, the proposed new impervious area for the development site will not exceed 25,000 SF. Therefore, stormwater detention is not required as part of this subdivision. The applicant should be aware that future improvements beyond what is shown on the preliminary engineering plans may require stormwater detention to be provided for the entire subdivision. A response to this comment is not necessary.
3. (2nd Request) The development site is located within a regulatory floodplain. Provide the applicable FIRM and FIS profile with the approximate location of the development site indicated on each. The BFE for the development site shall be indicated on the preliminary engineering plans, FIRM, and FIS profile.
4. A Subdivision Improvement Agreement (SIA) in accordance with Title 14-4-4 is not required for this subdivision as it is anticipated there will be no required land improvements (i.e. stormwater detention). Any improvements within the subdivision will require a standard building/engineering permit and are subject to all applicable provisions of the Village Code.

FINAL PLAT OF SUBDIVISION (L2KM2 SUBDIVISION)

5. Title 14-4-2.C.2 (and 14-6-2.B.8) – When compared to the topographic survey, the proposed limits of the Drainage and Floodplain Easement do not align with the indicated BFE of 668.4 as shown on the Preliminary Engineering Plans. Revise accordingly.
6. Title 14-6-2.B.1 – Please note that flag lots shall not be permitted unless after review by the Village Engineer, Planning and Zoning Commission, and Board of Trustees, a determination is made that the land in question cannot be reasonably developed in any other way. A response to this comment is not necessary.

If you have any questions, please contact me at jamie@ezaeng.com or (847) 257-5414.

Sincerely,
EZA ENGINEERING PLLC

James Patterson, P.E.

August 19, 2024

Ms. Rebecca Von Drasek
Development Services Director
Village of Oak Brook
1200 Oak Brook Road
Oak Brook, Illinois 60523

Project	Case No.	Review No.	Status
3601 Adams Road	2024 13 SR FP	1	Not Approved

EZA Engineering received the following permit submittal documents on August 7, 2024:

Document	Prepared By	Sheets	Date
L2KM2 Subdivision	Ridgeline Consultants	2	8-2-24
Boundary and Topographic Survey	Ridgeline Consultants	2	8-6-24

The above documents have been reviewed for compliance with the Village Code of Oak Brook (Village Code) and the Village of Oak Brook Stormwater and Flood Plain Ordinance (VOBSFPO). Please consider the following comments:

GENERAL COMMENTS

1. This application may be considered for a Final Plat of Subdivision without the typical requirement for a Preliminary Plat of Subdivision if preliminary engineering plans are submitted. The preliminary engineering plans are required if the proposed waiver to the stormwater detention requirement will be recommended for approval by the Village Engineer.
2. The development site is located within a regulatory floodplain. Provide the applicable FIRM and FIS profile with the approximate location of the development site indicated on each. The BFE for the development site shall be indicated on the preliminary engineering plans, FIRM, and FIS profile.
3. A Subdivision Improvement Agreement (SIA) in accordance with Title 14-4-4 is not required for this subdivision as it is anticipated there will be no required land improvements (i.e. stormwater detention). Any improvements within the subdivision will require a standard building/engineering permit and are subject to all applicable provisions of the Village Code.
4. Per an August 14, 2024 email from Matt Galas, the dimensions of Lot 1 and Lot 2 will be changing. Please implement the revisions in the next submittal.

FINAL PLAT OF SUBDIVISION (L2KM2 SUBDIVISION)

5. Title 14-4-2.B.1 – Include the term **FINAL PLAT** in the title of the document.
6. Title 14-4-2.B.2 – Provide a full and detailed description of the land embraced in the plat. This can be the same as the legal description provided in the Surveyor's Certificate.
7. Title 14-4-2.C.2 – Revise the font (size, bold) along the south property line of Lot 1 for consistency with the rest of the plat. Generally, the dimensions and bearings of the proposed lots are bold. The existing lots are not.

8. Title 14-4-2.C.2 (and 14-6-2.B.8) – Update the limits of the Drainage and Floodplain Easement recorded under Doc. No. R1999-228916 in accordance with the updated floodplain limits (see comment #2 above). The same easement provisions can be used on this plat.
9. Title 14-4-2.C.2 – An existing 20' Public Utility Easement (centered on the shared property line between existing Lot 1 and Lot 2) shall be vacated. Grant a proposed 20' Public Utility Easement (centered on the proposed shared property line between proposed Lot 1 and Lot 2). Please note that a concept plan provided to Village staff for detention waiver purposes showed a proposed residence within the existing easement.
10. Title 14-4-2.C.2 – "Vacate" and reestablish the proposed building setback lines.
11. Title 14-4-2.D.1 – Update the lot numbers and school district numbers referenced.
12. Title 14-4-2.D.2 – Remove the second Notary's Certificate from sheet 2 (lower left corner).
13. Title 14-4-2.D.3 – Update the Land Surveyor license number (no. 4071) for Jianfeng Hua, PLS. The certificate references surveyor no. 2580. Please note the surveyor's seal shall be placed adjacent to the certificate prior to recording.
14. Title 14-4-2.D.8 – Revise the title of this Certificate to **PLANNING & ZONING COMMISSION CERTIFICATE**. The certificate language shall be revised to read, "APPROVED BY THE **PLANNING & ZONING COMMISSION** OF THE VILLAGE OF OAK BROOK…"
15. Title 14-6-2.B.1 – Please note that flag lots shall not be permitted unless after review by the Village Engineer, Planning and Zoning Commission, and Board of Trustees, a determination is made that the land in question cannot be reasonably developed in any other way. A response to this comment is not necessary.

If you have any questions, please contact me at jamie@ezaeng.com or (847) 257-5414.

Sincerely,
EZA ENGINEERING PLLC

James Patterson, P.E.

VILLAGE OF
OAK BROOK
Illinois

BUTLER GOVERNMENT CENTER
1200 OAK BROOK ROAD
OAK BROOK, ILLINOIS 60523

September 12, 2024

Dear Resident:

The Oak Brook Planning & Zoning Commission and the Village Board will be considering a final plat of subdivision at the meetings scheduled on the reverse side of this notice.

The application has been filed by:	Doug Pertz 432 South Prairie Elmhurst, IL 60126
The property in question is located at:	3601 & 3505 Adams Road
Relationship of applicant to property:	Owner
Name of Subdivision	L2KM2 Subdivision

Also shown on the reverse side of this notice is a map* of the area to assist you in determining your relationship to the property in question.

The Applicant is seeking the approval of a final plat to amend the property line between the two existing parcels.

If you desire more detailed information, please contact the Development Services Department at 630-368-5106 or 630-368-5103 to make arrangements to review the application, typically 8:00 a.m. - 4:00 p.m., Monday through Friday, with the exception of holidays.

Sincerely,

Rebecca Von Drasek
Director, Development Services Department

In accord with the provisions of the Americans with Disabilities Act, any individual who is in need of a reasonable accommodation in order to participate in or benefit from attendance at a public meeting of the Village of Oak Brook should contact the Butler Government Center (Village Hall), at 630-368-5010 as soon as possible before the meeting date.

All meetings are held in the Butler Government Center of the Village of Oak Brook, located at 1200 Oak Brook Road (31st Street and Spring Road), Oak Brook, Illinois.

Planning & Zoning Commission Meeting . . . . . .6:30 p.m., Wednesday, October 2, 2024

Board of Trustees Meeting . . . . . 7:00 p.m., Tuesday, October 22, 2024**
**Tentative Follows the completion of the
Planning & Zoning Commission meeting.

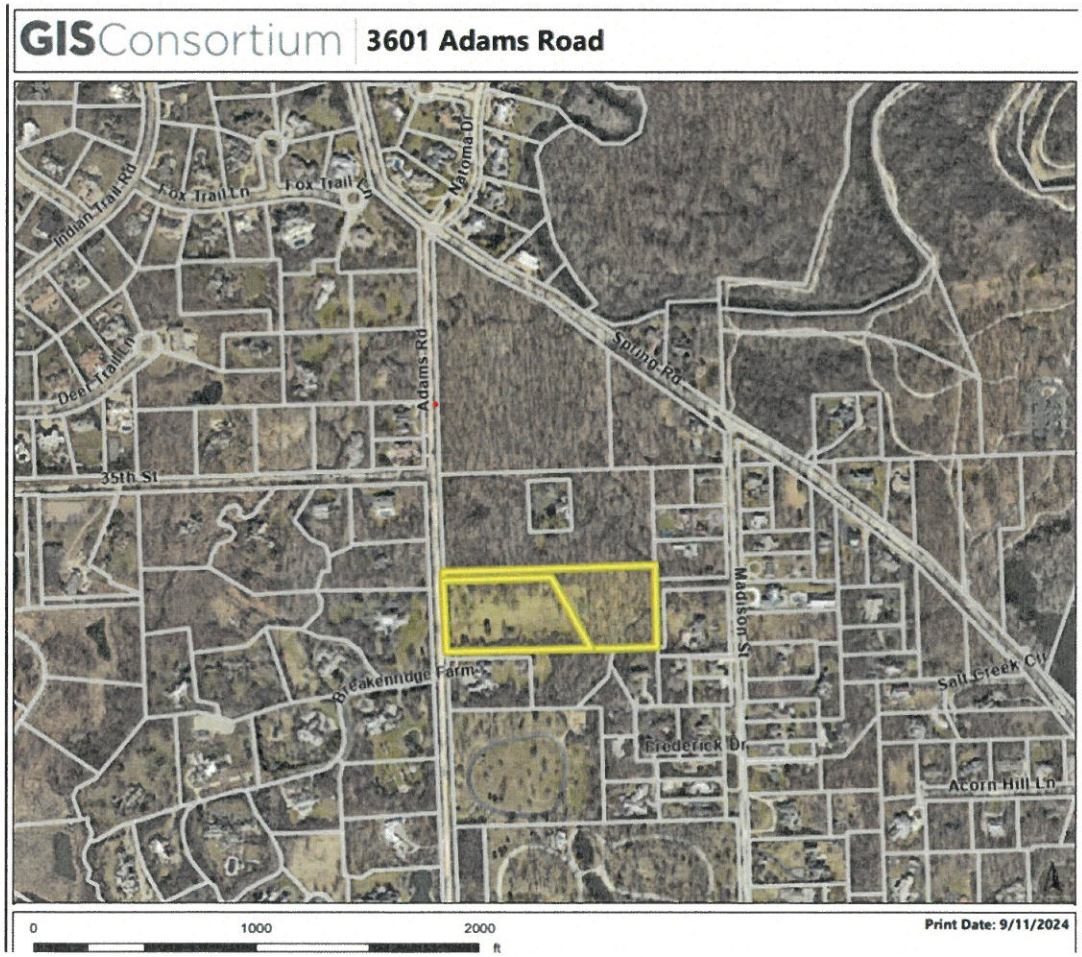

*Note: The map provided is only an approximation of the area in question and is intended to be used only as a visual aid to determine your relationship to the property

ITEM 5.D.1.
BOARD OF TRUSTEES MEETING
SAMUEL E. DEAN BOARD ROOM
BUTLER GOVERNMENT CENTER
1200 OAK BROOK ROAD
OAK BROOK, ILLINOIS
630-368-5000

AGENDA ITEM

Board of Trustees Regular Meeting
of
September 24, 2024

SUBJECT: 3601 & 3505 Adams Road – Final Plat - Subdivision Amendment

FROM: Rebecca Von Drasek, Development Services Director

BUDGET SOURCE/BUDGET IMPACT: N/A

RECOMMENDED MOTION: I move to refer the request for the final plat for a subdivision amendment to the Planning & Zoning Commission for review and recommendation.

Background/History:
The applicant and owners of the property, Doug Pertz and DJ Lagacy Capital, LLC. has submitted a petition requesting approval of a final plat to amend the lot-line between the two existing vacant lots. 3601 Adams Road is zoned R-1 and 3505 Adams Road is zoned R-1/R-2 District.

The request to amend the two (2) properties will retain a 7.64 acre lot. The owner intends to build a new residence. The minimum required lot area in the R-1 district is 87,100 square feet. The proposal for 3601 Adams Road is 152,624 square feet and 3505 Adams Road 180,181 square feet. The proposal appears to comply with the Subdivision and Zoning Ordinance regulations.

Several additional documents have been included with this referral to provide the Board with more specific information related to the request.

Recommendation:
Staff recommends that the Village Board refer the final plat to the Planning & Zoning Commission for a public meeting, review, and a recommendation.

Attachments:
1. REF_BOT_9-24-24

14-3-1: PLATS REQUIRED:

A. Plats Prerequisite To Subdividing Lands: Before subdividing any tract or parcel of land in the village and the unincorporated areas within one and one-half ($1\frac{1}{2}$) miles of the village limits, an owner or subdivider shall submit a preliminary plat and a final plat to be acted upon by the village authorities in accordance with the following requirements. Prior to preparation of preliminary plat drawings, it is suggested that the subdivider consult with the plan commission and other village officials to determine conformity to the official plan, zoning ordinance and compliance with this and other applicable village ordinances.

B. Subdivisions Of Not More Than Five Lots:

1. When an application for approval of a subdivision plat containing not more than five (5) lots and located within the village limits is submitted, and is accompanied by an affidavit that such plat comprises the entire contiguous undeveloped land area in which the applicant has any interest, the village clerk shall refer such plat to the village board and if, upon its consideration thereof and after receiving a report from the plan commission which includes a finding that the plat contains the entire contiguous undeveloped land in which the applicant has any interest, it finds that the intent and purpose of this title is not violated, the village board may approve such plat without further procedure.

2. The plat of such a subdivision submitted by the subdivider for approval shall meet all requirements for a final plat as required by these regulations. (Ord. G-708, 12-10-2002)

14-4-2: FINAL PLAT REQUIREMENTS:

A. General: The final plat shall be drawn with black waterproof drawing ink on transparent linen tracing cloth, or equal, in a manner that clear and legible transparent or contact prints can be made.

B. Identification And Description:

1. Proposed name of subdivision.

2. A full and detailed description of the land embraced in the plat, showing the township and range in which such land is situated, and the sections and parts of sections platted, and in the case of replatting or resubdividing, a description of the part of, and the name of, the original plat which is replatted or resubdivided, containing the name of the town, city, village or addition platted, the name of the proprietor required to sign the plat and the surveyor making it. If there is any excepted parcel within the plat boundary it must be accurately described by metes, bounds and courses.

3. Scale of plat, one inch equals one hundred feet (1" = 100') or other scale approved by the village engineer.

4. North point (indicating true north).

5. Date of preparation.

C. Delineation Of Final Plat:

1. Boundary of the plat based on an accurate traverse, with all angular and linear dimensions shown.

2. All blocks, lots, streets, alleys, crosswalks, easements and setback lines within or adjacent to the plat, all of which shall have all angular and linear dimensions given and all radii, internal angles, bearings, points of curvature, tangents and lengths of all curves so that no dimensions or data are missing which are required for the future relocation of any of the corners or boundaries of blocks, lots, streets,etc., as listed above. All dimensions shall be given to the nearest hundredth of a foot.

3. True angles and distances to the nearest established official monuments, not less than three (3) of which shall be accurately described on the plat.

4. Municipal, township or section lines accurately tied to the lines of the subdivision by distances and angles.

5. Block and lot numbers of all blocks and lots. Names of all existing streets and all streets in the subdivision.

6. Accurate outlines, legal descriptions of any areas to be dedicated or reserved for public use or for the exclusive use of property owners within the subdivision.

7. Location of all iron stakes and all permanent monuments required by this chapter.

8. Any protective covenants.

9. Statements covering easement provisions.

10. All other information required by state statutes.

In addition to all other requirements herein contained, there shall be submitted with the final plat a document over the signature of the engineer or surveyor, who prepared such plat, indicating the total square footage of each lot shown on the plat.

SUBDIVISION APPLICATION

VILLAGE OF OAK BROOK Illinois

1200 OAK BROOK ROAD
OAK BROOK, IL 60523
630-368-5106 or 630-368-5146

- [x] **PRELIMINARY PLAT OF SUBDIVISION**
- [ ] **FINAL PLAT OF SUBDIVISION**
- [ ] **FINAL PLAT OF CONSOLIDATION AND/OR PLAT OF VACATION**
- [ ] **ASSESSMENT PLAT SUBDIVISION**
- [ ] **SUBDIVISION AMENDMENT AND/OR VARIATION**

NOTE: SEE DOCUMENT SUBMITTAL GUIDELINES ATTACHED TO THE APPLICATION.

SUBDIVISION TITLE L2KM2 Subdivision

DATE FILED

GENERAL LOCATION AND LEGAL ADDRESS OF PROPERTY TO BE SUBDIVIDED
3601 Adams Road, Oak Brook, IL 60523
3505 Adams Road, Oak Brook, IL 60523

ARE YOU SEEKING ANY VARIATION (RELIEF) TO THE SUBDIVISION REGULATIONS? YES [ ] NO [x]

If **YES**, list the specific section in the Subdivision Regulations and attach a detailed explanation of the relief you are seeking:

PERMANENT PARCEL NO. 06-35-401-031, 06-35-401-032

NAME OF APPLICANT (and Email Address) Doug Pertz (matt.galas@gmail.com) PHONE 847-204-6880

ADDRESS 432 South Prairie CITY Elmhurst STATE IL ZIP 60126

RELATIONSHIP of APPLICANT TO PROPERTY Owner

OWNER OF RECORD DJ LEGACY CAPITAL LLC L2KM2 OHANA CAPITAL LLC PHONE 847-204-6880

ADDRESS PO Box 96042 CITY Southlake STATE ____ ZIP ____

BENEFICIARY (IES) OF TRUST ____ PHONE ____

ADDRESS ____ CITY ____ STATE ____ ZIP ____

I (we) certify that all of the above statements and the statements contained in any papers or plans submitted herewith are true to the best of my (our) knowledge and belief. I (we) give permission to the Village to install public hearing sign(s) on the lot frontages of the above subject property as described in the Village Code. In addition to the above fees, **applicant agrees to reimburse the Village** for publication costs within 30 days of billing.

Signature of Owner — Date 8/6/24

Signature of Applicant — Date 8/6/24

OWNERS AFFIDAVIT FOR SUBDIVISIONS OF NOT MORE THAN FIVE (5) LOTS

This plat contains the entire contiguous undeveloped land area in which I have any interest.

Signature of Owner — Date 8/6/24

IDENTIFY STRUCTURES AND OTHER IMPROVEMENTS ON THE PROPERTY (Use additional paper if needed

SIZING BY LAND USE CATEGORY	RESIDENTIAL	COMMERCIAL	OPEN SPACE	OTHER	TOTAL
NUMBER of LOTS	2				2
NUMBER of ACRES	7.64				7.64
NUMBER of SQUARE FEET	332,805				332,805

Names of Surrounding Property Owners

Following are the names and addresses of all surrounding property owners from the property in question for a distance of approximately 250 feet in all directions. **Provide a mailing label for each Property Owner listed**. The number of feet occupied by all public roads, streets, alleys, and public ways has been excluded in computing the 250-foot requirement. Said names are as recorded in the office of the County Recorder of Deeds (or the Registrar of Titles of the County) and as appear from the authentic tax records of this County within 30 days of the filing of this application. (Attach additional sheets if necessary)

NAME OF PROPERTY OWNER	MAILING ADDRESS OF PROPERTY OWNER	PROPERTY ADDRESS	PERMANENT INDEX NUMBER
See attached "Exhibit A - Names of Surrounding Property Owners"			

NOTICE TO APPLICANT

REFER TO OAK BROOK CODE: TITLE 14 - SUBDIVISION REGULATIONS

DO NOT SUBMIT ANY proposed plat of subdivision until you are directed to do so. **ALL Subdivision application forms, Subdivision plats and engineering plans (if required), and other documents are to be emailed to Cathy at:** cchiarelli@oak-brook.org **for a preliminary review along with the contact person information who will be making any plat revisions.**

After comments and revisions have been completed by the Village Engineer at least 10 days before the Plan Commission meeting, you will be directed to submit, the following: The original Applications must be completed, signed and ***accompanied with the following***: Proper fee (payable to the Village of Oak Brook), Two (2) folded copies of the proposed subdivision **(pursuant to the Plat Act maximum sheet size permitted is 30" x 36")**, 2 copies of Plat of Survey with Legal Description, Common Address and P.I.N. noted. Include a PDF of all plats and plans of each, which is to be emailed to cchiarelli@oak-brook.org) Completed Subject Property Verification, Surrounding Property Owners form. If the applicant is NOT the property owner, a Letter of Standing is required with the written consent / authorization from the property owner. ***See Submittal Guideline for a complete list of requirements***.

Fees and documents must be received prior to the 2nd to the last Friday of the second preceding month for Planning & Zoning Commission review on the first Wednesday of the each month. An incomplete submittal will NOT be accepted and may be returned to the applicant. Please check all items applicable::

PRELIMINARY PLAT	$750	$50.00 per lot or $750.00 minimum**
FINAL PLAT(G-289, 3/24/81)	____	$750.00 – NO IMPROVEMENTS**(Plus Plan Review & Inspection Fees, if required)
FINAL PLAT – with Improvements	____	$750.00 plus plan review fees – See Section 1-14-1-E.3 for amount (G-706 11/2002)
AMENDMENT or VARIATION	____	$750.00*
ASSESSMENT PLAT (12/11/79)	____	No Charge
Public Hearing Signs	$100	$50.00 per sign – 1 sign required for each Street Frontage/Per Parcel

*Fees do not include publication costs, which are paid for separately

** $125 fee for each time extension Fees - Title 1 Chapter 14 of this code.

All meetings are held in the Samuel E. Dean Board Room of the Butler Government Center, 1200 Oak Brook Road

DO NOT WRITE IN THIS SPACE BELOW FOR VILLAGE USE ONLY

Date Filed 8/23/24 Fee Paid $ 850.00 Receipt No. ____ Received By C. Chiarelli

HEARING DATES: Board of Trustees (Referral) 9/24/24 P&Z Commission 10/2/24 Board of Trustees ____

SIGNED - VILLAGE CLERK Natasha Sarpini Date 8/25/24

Exhibit A - Names of Surrounding Property Owners

Name of Property Owner	Mailing Address of Property Owner	Property Address	Parcel Number
John E Allen	3502 Adams Rd, Oak Brook, IL 60523	3502 Adams Rd, Oak Brook, IL 60523	635400018
Laura L Kelly	3516 Adams Rd, Oak Brook, IL 60523	3516 Adams Rd, Oak Brook, IL 60523	635400019
Oliver & Diane Drabkin	19111 Collins Ave Unit 3908, Sunny Isles Beac	3600 Adams Rd, Oak Brook, IL 60523	635400006
CTLTC 0001102179	10 S. LaSalle St, Suite 2750, Chicago, IL 6060	25 Breakenridge Rd, Oak Brook, IL 60523	635404002
RKJK Family Trust	3501 Adams St, Oak Brook, IL 60523	3501 Adams St, Oak Brook, IL 60523	635401029
RKJK Family Trust	3501 Adams St, Oak Brook, IL 60523	3501 Adams St, Oak Brook, IL 60523	635401030
Mark & Mary Ann Kaufman	3605 - 15 Adams Rd, Oak Brook, IL 60523	3605 Adams Ad, Oak Brook, IL 60523	635401014
Mark & Mary Ann Kaufman	3605 - 15 Adams Rd, Oak Brook, IL 60523	3605 Adams Ad, Oak Brook, IL 60523	635401015
Jacob & Alice Lillioja	3616 Frederick Dr, Oak Brook, IL 60523	3616 Frederick Dr, Oak Brook, IL 60523	635401018
Donna Cappetta	3612 Frederick Rd, Oak Brook, IL 60523	3612 Frederick Rd, Oak Brook, IL 60523	635401017
Dennis J Sarelas	3601 Madison Ave, Oak Brook, IL 60523	3610 Madison St, Oak Brook, IL 60523	635403036
T & M Daniel McCabe	3608 Madison St, Oak Brook, IL 60523	3608 Madison St, Oak Brook, IL 60523	635403032
Rebecca Lynn Arbor	3614 Madison St, Oak Brook, IL 60523	3614 Madison St, Oak Brook, IL 60523	635403037
Giancarlo & Y Turano II	3602 Madison St, Oak Brook, IL 60523	3602 Madison St, Oak Brook, IL 60523	635403035
J Bruce & Lois Miller	3518 Madison St, Oak Brook, IL 60523	3518 Madison St, Oak Brook, IL 60523	635402005
Ashley & Chris Wurzer	3516 Madison St, Oak Brook, IL 60523	3516 Madison St, Oak Brook, IL 60523	635402004

CERTIFICATION

Surrounding Property Owners

I (we) certify that the names and addresses of all the surrounding property owners including mailing labels submitted with this application are located within a minimum distance of 250 feet in all directions from the perimeter of the subject property and that the number of feet occupied by all public roads, streets, alleys, and public ways has been **excluded** in computing the 250-foot requirement.

Said names and addresses are as recorded in the office of the County Recorder of Deeds (or the Registrar of Titles of the County) and as appear from the authentic tax records of this County. The property owners as listed have been obtained from the Township Assessors office **within 30 days** of the filing of this application.

The surrounding property owners list as submitted herewith and supporting attachments are true to the best of my (our) knowledge and belief.

I (we) give permission to the Village to install public hearing sign(s) on the lot frontages of the subject property as described in the Village Code. In addition to the required application fees, applicant/owner agrees to reimburse the Village for publication costs, recording fees, and any other associated costs or fees within 30 days of billing.

Doug A Pertz		Doug A Pertz	
Printed Name of Property Owner		Printed Name of Applicant	
Signature of Owner	8/6/24 Date	Signature of Applicant	8/6/24 Date

BILL TO INFORMATION:

Matt Galas	Matt Galas	847-204-6880
Print Name/Company	Print Contact Person Name	Contact Phone
432 South Prairie Ave, Elmhurst, IL 60126		
Address To be Billed		Alternate Phone

NOTE: If the applicant/owner has not complied with these requirements and the Surrounding Property Owners List is incomplete and notification has not been sent to a neighboring property owner within the 250-foot requirement less than 10 days prior to the scheduled Plan Commission meeting, the hearing on this matter will be postponed to the next regular Plan Commission meeting, or until such time as a completed list of all neighbors within the 250-foot requirement has been submitted and have been sent proper notification as noted.

SUBJECT PROPERTY VERIFICATION

(Complete a separate form for each P.I.N.)

1. Permanent Index Number (P.I.N. from Real Estate Tax Bill): 06-35-401-031 06-35-401-032
2. Common Address: 3601 Adams Road, Oak Brook, IL 60523 3505 Adams Road, Oak Brook, IL 60523
3. Provide the Legal Description for each lot as noted on the Plat of Survey as an attachment.
4. Provide the proposed Legal Description for each lot as an attachment.
5. Email the Current and Proposed Legal Description in a Word document to cchiarelli@oak-brook.org

PLEASE SEE ATTACHED LEGAL DESCRIPTIONS FOR EACH ORIGINAL PARCEL AND FOR THE RESULTING PARCEL

The Permanent Index Number, Common Address and Legal information provided has been verified as follows:

06-35-401-031 3601 Adams Road, Oak Brook, IL 60523
06-35-401-032 3505 Adams Road, Oak Brook, IL 60523

DuPage County Records/Research Room At: 630-407-5401 Contact Person: Stephanie

Only First name of Contact is required. Date called: 7/30/2024 11:54am

I verify that the information provided above is accurate.

Doug A Pertz
Printed Name

Signature

Date 8/6/2024

Relationship to Applicant: Applicant

LEGAL DESCRIPTION:

LOT 2 IN MICHAEL E. SCHEID SUBDIVISION, BEING A SUBDIVISION OF PART OF SECTION 35, TOWNSHIP 39 NORTH, RANGE 11, EAST OF THE THIRD PRINCIPAL MERIDIAN, ACCORDING TO THE PLAT THEREOF RECORDED OCTOBER 28, 1999 AS DOCUMENT R1999-228916, IN DUPAGE COUNTY, ILLINOIS.

COMMONLY KNOWN AS 3505 ADAMS ROAD, OAKBROOK, ILLINOIS.

LEGAL DESCRIPTION:

LOT 1 IN MICHAEL E. SCHEID SUBDIVISION, BEING A SUBDIVISION OF PART OF SECTION 35, TOWNSHIP 39 NORTH, RANGE 11, EAST OF THE THIRD PRINCIPAL MERIDIAN, ACCORDING TO THE PLAT THEREOF RECORDED OCTOBER 28, 1999 AS DOCUMENT R1999-228916, IN DUPAGE COUNTY, ILLINOIS.

COMMONLY KNOWN AS 3601 ADAMS ROAD, OAKBROOK, ILLINOIS.

Please Deposit Check in: Zoning Account 10-4302

For:

3601 Adams – Subdivision Amendment

NOTE: 2 check(s) – Total ***$ 850***

Variations Application ***$750***
Public Hearing Signs (1) ***$100***

VILLAGE OF OAK BROOK
1200 OAK BROOK ROAD
OAK BROOK, IL 60523

MISCELLANEOUS PAYMENT RECPT#: 749010
DATE: 08/23/24 TIME: 14:35:52
CLERK: jwozniak DEPT:
CUSTOMER#:

COMMENT: 3601 ADAMS-SUB. AMEN

REVENUE:
1 10 43020 850.00
ZONING/SUBDIV APPLICATION
ZONING/SUBDIVISION
CASH:
99 1105 850.00
CASH -PLD

AMOUNT PAID: 850.00

PAID BY: MATTHEW AND LINDSAY
PAYMENT METH: CHECK
2225

REFERENCE:

AMT TENDERED: 850.00
AMT APPLIED: 850.00
CHANGE: .00

FINAL PLAT OF SUBDIVISION

L2KM2 SUBDIVISION

LOTS 1 AND 2 IN MICHAEL E. SCHEID SUBDIVISION, BEING A SUBDIVISION OF PART OF SECTION 35, TOWNSHIP 39 NORTH, RANGE 11, EAST OF THE THIRD PRINCIPAL MERIDIAN, ACCORDING TO THE PLAT THEREOF RECORDED OCTOBER 28, 1999 AS DOCUMENT NO. R1999-228916, IN DUPAGE COUNTY, ILLINOIS

PARCEL INDEX NUMBERS

06-35-401-031
06-35-401-032

THIS PLAT HAS BEEN SUBMITTED FOR RECORDING BY AND RETURN TO:
NAME: VILLAGE OF OAK BROOK
ADDRESS: 1200 OAK BROOK ROAD
OAK BROOK, IL 60523

North
Scale 1" = 40'

40' 0' 40' 80'

SYMBOL & LINE TYPE LEGEND

- = BUILDING LINE
- = EASEMENT LINE
- = IRON PIPE FOUND
- = PROPERTY LINE
- = RIGHT OF WAY LINE
- = SECTION LINE
- = SUBDIVISION BOUNDARY LINE

NOTES:

1) ALL MEASURED BEARINGS SHOWN HEREON ARE BASED ON NAD 83 ILLINOIS COORDINATE SYSTEM, EAST ZONE (2011 CORRECTION) AS DETERMINED BY USE OF GPS EQUIPMENT USING TRIMBLES VRS NETWORK AND EQUIPMENT ALONG WITH THE RECORDED PLAT OF SUBDIVISION.
2) SURVEY FIELD WORK COMPLETED ON MAY 17, 2024.
3) ALL MONUMENT TIES ARE MEASURED PERPENDICULAR TO THE PROPERTY LINE(S).
4) THIS SURVEY IS BASED ON INFORMATION NOTED IN CHICAGO TITLE INSURANCE COMPANY'S TITLE COMMITMENT NO. 24001729LT DATED FEBRUARY 29, 2024.

ABBREVIATION LEGEND

E = EAST
E'LY = EASTERLY
M = MEASURED
N = NORTH
N'LY = NORTHERLY
PC = POINT OF CURVATURE
PT = POINT OF TANGENCY
P.U.E. = PUBLIC UTILITY EASEMENT
R = RECORD
S = SOUTH
S'LY = SOUTHERLY
W = WEST
W'LY = WESTERLY

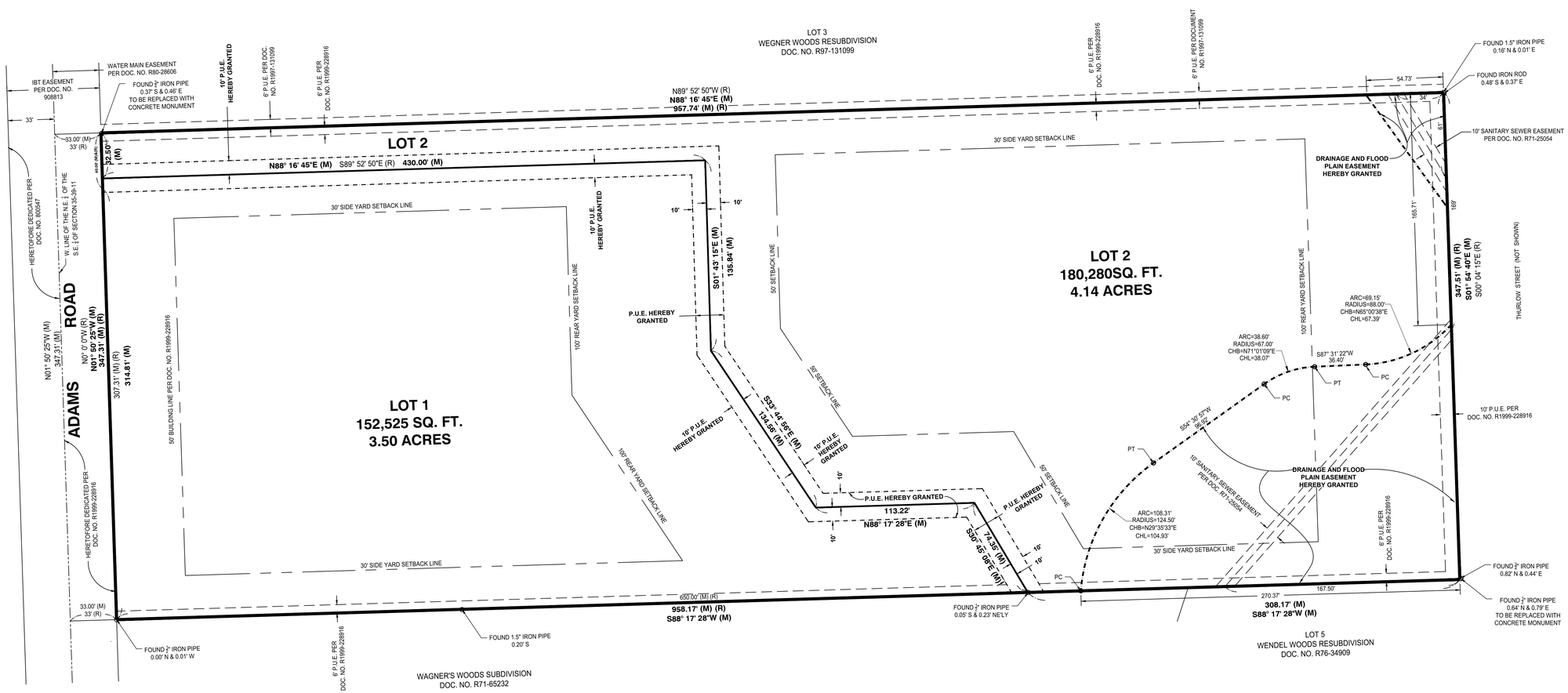

REVISION:	DATE:	DESC	BOOK:	DWG. SIZE: D
#1	8/15/24	RECONFIGURE LOTS	DRAWN: TLC (MH)	CHECKED: JH
#2	8/22/24	REVISE PER REVIEW LETTER DATED 8/19/24	REFERENCE:	
#3	9/13/24	REMOVE MORTGAGE CERTIFICATE	DATE: 08/02/2024	
			PROJECT NO.	2024-0175

Ridgeline Consultants LLC
Illinois Professional Design Firm No. 184-004766
1661 Aucutt Road, Montgomery, IL 60538
PH: 630.801.7927 FAX: 630.701.1385
James Hoban P.L.S. 4017 Expiration Date 11/30/2024
Stacy L. Stewart P.L.S. 3415 Expiration Date 11/30/2024

PREPARED FOR: MATT GALAS

PROPERTY ADDRESS: 3601 & 3505 ADAMS ROAD
OAKBROOK, ILLINOIS

SHEET 1 OF 3

EASEMENT VACATION

PROPERTY DESCRIPTION:
LOTS 1 AND 2 IN MICHAEL E. SCHEID SUBDIVISION, BEING A SUBDIVISION OF PART OF SECTION 35, TOWNSHIP 39 NORTH, RANGE 11, EAST OF THE THIRD PRINCIPAL MERIDIAN, ACCORDING TO THE PLAT THEREOF RECORDED OCTOBER 28, 1999 AS DOCUMENT NO. R1999-228916, IN DUPAGE COUNTY, ILLINOIS

PARCEL INDEX NUMBERS
06-35-401-031
06-35-401-032

SYMBOL & LINE TYPE LEGEND

- = BUILDING LINE
- = EASEMENT LINE
- = IRON PIPE FOUND
- = PROPERTY LINE
- = RIGHT OF WAY LINE
- = SECTION LINE
- = SUBDIVISION BOUNDARY LINE
- = PUBLIC UTILITY EASEMENT HEREBY VACATED
  DRAINAGE & FLOOD PLAIN EASEMENT HEREBY VACATED

ABBREVIATION LEGEND

E = EAST
E'LY = EASTERLY
M = MEASURED
N = NORTH
N'LY = NORTHERLY
P.U.E. = PUBLIC UTILITY EASEMENT
R = RECORD
S = SOUTH
S'LY = SOUTHERLY
W = WEST
W'LY = WESTERLY

North
Scale 1" = 40'

40' 0' 40' 80'

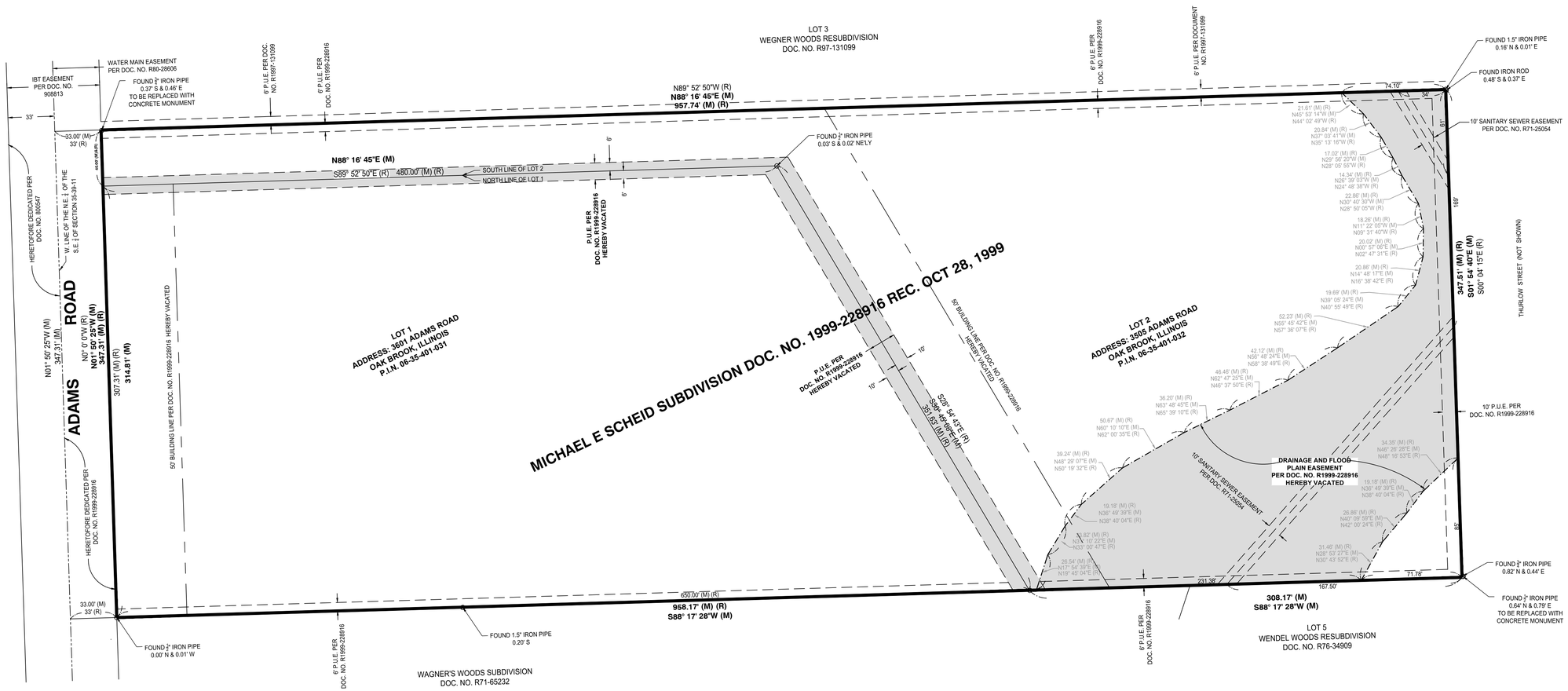

REVISION	DATE	DESC
#1	8/15/24	RECONFIGURE LOTS
#2	8/22/24	REVISE PER REVIEW LETTER DATED 8/19/24
#3	9/13/24	REMOVE MORTGAGE CERTIFICATE

BOOK:
DRAWN: TLC (MH)
REFERENCE:
DATE: 08/02/2024
DWG. SIZE: D
CHECKED: JH
PROJECT NO. 2024-0175

Ridgeline Consultants LLC
Illinois Professional Design Firm No. 184-004766
1661 Aucutt Road, Montgomery, IL 60538
PH: 630.801.7927 FAX: 630.701.1385
Jay Hoffman, P.L.S. 3477 Expiration Date 11/30/2024
Stacy L. Stewart P.L.S. 3415 Expiration Date 11/30/2024

PREPARED FOR: MATT GALAS
PROPERTY ADDRESS: 3601 & 3505 ADAMS ROAD
OAKBROOK, ILLINOIS

SHEET 2 OF 3

FINAL PLAT OF SUBDIVISION

L2KM2 SUBDIVISION

LOTS 1 AND 2 IN MICHAEL E. SCHEID SUBDIVISION, BEING A SUBDIVISION OF PART OF SECTION 35, TOWNSHIP 39 NORTH, RANGE 11, EAST OF THE THIRD PRINCIPAL MERIDIAN, ACCORDING TO THE PLAT THEREOF RECORDED OCTOBER 28, 1999 AS DOCUMENT NO. R1999-228916, IN DUPAGE COUNTY, ILLINOIS

OWNER'S CERTIFICATE

STATE OF ILLINOIS)
)SS
COUNTY OF DUPAGE)

THIS IS TO CERTIFY THAT THE UNDERSIGNED IS THE OWNER OF THE LAND DESCRIBED IN THE ANNEXED PLAT, AND HAS CAUSED THE SAME TO BE SURVEYED AND SUBDIVIDED, AS INDICATED THEREON, FOR THE USES AND PURPOSES THEREIN SET FORTH, AND DOES HEREBY ACKNOWLEDGE AND ADOPT THE SAME UNDER THE STYLE AND TITLE THEREON INDICATED.

THE UNDERSIGNED HEREBY DEDICATES FOR PUBLIC USE THE LANDS SHOWN ON THIS PLAT FOR THOROUGHFARES, STREETS, ALLEYS AND PUBLIC SERVICES; AND HEREBY ALSO RESERVES FOR AND GRANTS EASEMENTS FOR PUBLIC USE AND FOR THE INSTALLATION OF VARIOUS PUBLIC UTILITIES AS DESIGNATED AND/OR AS STATED IN THE UTILITY EASEMENT PROVISIONS WHICH ARE STATED HEREON.

ALL EASEMENTS INDICATED AS PUBLIC UTILITY EASEMENTS ON THIS PLAT ARE RESERVED FOR AND GRANTED TO THE VILLAGE OF OAK BROOK AND TO THOSE PUBLIC AND PRIVATE UTILITY COMPANIES OPERATING WITHIN THE VILLAGE INCLUDING, BUT NOT LIMITED TO, AMERITECH, COMMONWEALTH EDISON COMPANY, NORTHERN ILLINOIS GAS COMPANY, FLAGG CREEK WATER RECLAMATION DISTRICT, AND THEIR SUCCESSORS AND ASSIGNS FOR THE PERPETUAL RIGHT, PRIVILEGE AND AUTHORITY TO INSTALL, CONSTRUCT, RECONSTRUCT, INSPECT, REPLACE, ALTER, ENLARGE, REMOVE, REPAIR, CLEAN, OPERATE AND MAINTAIN VARIOUS UTILITY, TRANSMISSION, DISTRIBUTION, COLLECTION AND DRAINAGE SYSTEMS TOGETHER WITH ANY AND ALL NECESSARY BUFFALO BOXES, CONNECTIONS, HYDRANTS, MANHOLES, CATCH BASINS, PIPES, SANITARY OR STORM SEWERS, SWALES, WATER MAINS, CABLES, WIRES, CONDUITS, TRANSFORMERS, PEDESTALS, AND WITHOUT LIMITATION SUCH OTHER APPURTENANCES OR DEVICES AS MAY BE DEEMED NECESSARY BY SAID VILLAGE OR UTILITY COMPANY UPON, ALONG, UNDER AND THROUGH SAID INDICATED EASEMENTS, TOGETHER WITH RIGHT OF ACCESS ACROSS THE PROPERTY FOR NECESSARY WORKERS AND EQUIPMENT TO DO ANY OF THE ABOVE WORK AND THE RIGHT IS ALSO GRANTED TO CUT DOWN, TRIM OR REMOVE ANY TREES, SHRUBS OR OTHER PLANTS ON THE EASEMENT THAT INTERFERE WITH THE OPERATION OF SEWERS OR OTHER UTILITIES. NO PERMANENT BUILDINGS OR STRUCTURES SHALL BE PLACED ON SAID EASEMENTS, EXCEPT AS REFERENCED ABOVE, BUT SAME MAY BE USED FOR GARDENS, SHRUBS, LANDSCAPING AND OTHER PURPOSES THAT DO NOT THEN OR LATER INTERFERE WITH THE AFORESAID USES OR RIGHTS. WHENEVER THE VILLAGE OR AFFECTED UTILITY COMPANY DETERMINES THAT ANY TREE, SHRUBS, VEGETATION, OR OTHER STRUCTURES OR OBJECTS (HEREIN COLLECTIVELY KNOWN AS "OBSTRUCTION") ON SAID EASEMENTS INTERFERE WITH THE AFORESAID USES OR RIGHTS, THE VILLAGE OR UTILITY COMPANY HAS THE RIGHT, BUT NOT THE OBLIGATION, TO REMOVE THE OBSTRUCTION AT THE PROPERTY OWNER'S EXPENSE. THE VILLAGE OR AFFECTED UTILITY COMPANY WILL APPLY GRASS SEED WHERE THE OBSTRUCTION HAS BEEN REMOVED, BUT IS NOT REQUIRED TO REPLACE OR REPAIR ANY OBSTRUCTION. ALL INSTALLATIONS ARE SUBJECT TO THE ORDINANCES OF THE VILLAGE OF OAK BROOK.

_____

_____
ADDRESS

DATED THIS ____ DAY OF _____, 20___.

NOTARY'S CERTIFICATE

STATE OF ILLINOIS)
)SS
COUNTY OF DUPAGE)

I, _____, A NOTARY PUBLIC IN AND FOR SAID COUNTY, IN THE STATE AFORESAID, DO HEREBY CERTIFY THAT _____ PERSONALLY KNOWN TO ME TO BE THE SAME PERSONS WHOSE NAMES ARE SUBSCRIBED TO THE AFORESAID INSTRUMENT AS SUCH OWNERS, APPEARED BEFORE ME THIS DAY IN PERSON AND ACKNOWLEDGED THAT THEY SIGNED THE ANNEXED PLAT AS THEIR OWN FREE AND VOLUNTARY ACT FOR THE USES AND PURPOSES THEREIN SET FORTH.

GIVEN UNDER MY HAND AND NOTARIAL SEAL THIS ____ DAY OF _____, 20___.

_____
NOTARY PUBLIC

SCHOOL DISTRICT CERTIFICATE

STATE OF ILLINOIS)
)SS
COUNTY OF DUPAGE)

THIS IS TO CERTIFY THAT I, _____, AS OWNER OF THE PROPERTY DESCRIBED AS THE _____ SUBDIVISION AND LEGALLY DESCRIBED ON THIS PLAT OF THE SAME NAME, HAVE DETERMINED, TO THE BEST OF MY KNOWLEDGE, THE SCHOOL DISTRICTS IN WHICH EACH OF THE FOLLOWING LOTS LIES:

SCHOOL DISTRICTS
LOT NUMBERS 1 - 2
ELEMENTARY DISTRICT #53
HIGH SCHOOL DISTRICT #86
COMMUNITY COLLEGE - COLLEGE OF DUPAGE #502

DATED THIS ____ DAY OF _____, 20___.

_____

_____
ADDRESS

DRAINAGE AND FLOOD PLAIN EASEMENT PROVISION

A NON-EXCLUSIVE PERPETUAL EASEMENT IS HEREBY RESERVED FOR AND GRANTED TO THE VILLAGE OF OAK BROOK AND ITS SUCCESSORS AND ASSIGNS WITHIN THE AREA ON THE PLAT MARKED "DRAINAGE AND FLOOD PLAIN EASEMENT". SAID EASEMENT SHALL BE FOR DRAINAGE AND STORM WATER RUNOFF AND FOR TEMPORARILY STORING EXCESS STORM WATER RUNOFF AND FLOOD WATERS. THE OWNERS, SUCCESSORS AND ASSIGNS OF LOTS 1 AND 2 SHALL GRANT TO THE VILLAGE SUCH ACCESS AS NECESSARY ACROSS LOTS 1 AND 2 FOR INSPECTING THE DRAINAGE AND FLOOD PLAIN EASEMENT AREA. PLACEMENT OF ANY MATERIAL (HEREINAFTER CALLED "OBSTRUCTION") WITHIN THIS EASEMENT AREA IS PROHIBITED UNLESS SPECIFICALLY PERMITTED BY THE VILLAGE. IF PLACEMENT OF ANY MATERIAL IS ACCOMPLISHED WITHOUT VILLAGE APPROVAL, THE OWNER OF THE PROPERTY ENCOMPASSING THE EASEMENT AREA SHALL REMOVE SUCH OBSTRUCTION WITHIN TEN (10) DAYS AFTER WRITTEN NOTICE FROM THE VILLAGE. IF SUCH OWNER FAILS TO REMOVE SUCH OBSTRUCTION UPON TEN (10) DAYS NOTICE, THE VILLAGE SHALL HAVE THE RIGHT TO UNDERTAKE SUCH REMOVAL AND, UPON COMPLETION, TO BE REIMBURSED FOR ALL OUT-OF-POCKET COSTS AND EXPENSES INCURRED IN CONNECTION WITH SUCH REMOVAL WITHIN THIRTY (30) DAYS FROM THE DATE OF SUCH COSTS OR EXPENSES. FAILURE OF ANY SUCH OWNER TO MAKE REIMBURSEMENT SHALL AUTHORIZE THE VILLAGE TO PLACE LIENS AGAINST PROPERTY OF THE AFFECTED OWNER FOR ITS COSTS INCURRED THEREIN AND TO ENFORCE SAID LIENS THROUGH ANY APPROPRIATE AND AVAILABLE LEGAL PROCEEDINGS EITHER AT LAW OR IN EQUITY.

DRAINAGE CERTIFICATE

STATE OF ILLINOIS)
)SS
COUNTY OF KANE)

TO THE BEST OF OUR KNOWLEDGE AND BELIEF, THE DRAINAGE OF SURFACE WATERS WILL NOT BE CHANGED BY THE CONSTRUCTION OF SUCH SUBDIVISION OR ANY PART THEREOF, OR, THAT IF SUCH SURFACE WATER DRAINAGE WILL BE CHANGED, REASONABLE PROVISION HAS BEEN MADE FOR COLLECTION AND DIVERSION OF SUCH SURFACE WATERS INTO PUBLIC AREAS, OR DRAINS WHICH THE SUBDIVIDER HAS A RIGHT TO USE, AND THAT SUCH SURFACE WATERS WILL BE PLANNED FOR IN ACCORDANCE WITH GENERALLY ACCEPTED ENGINEERING PRACTICES SO AS TO REDUCE THE LIKELIHOOD OF DAMAGE TO THE ADJOINING PROPERTY BECAUSE OF THE CONSTRUCTION OF THE SUBDIVISION.

DATED THIS ____ DAY OF _____, 20___.

_____
ENGINEER

_____
OWNER OR ATTORNEY

PLANNING & ZONING COMMISSION CERTIFICATE

STATE OF ILLINOIS)
)SS
COUNTY OF DUPAGE)

APPROVED BY THE PLANNING & ZONING COMMISSION OF THE VILLAGE OF OAK BROOK, DUPAGE COUNTY, ILLINOIS, THIS ____ DAY OF _____, 20___.

_____
CHAIRMAN

VILLAGE ENGINEER'S CERTIFICATE

STATE OF ILLINOIS)
)SS
COUNTY OF DUPAGE)

I, _____, VILLAGE ENGINEER OF THE VILLAGE OF OAK BROOK, ILLINOIS, HEREBY CERTIFY THAT THE LAND IMPROVEMENTS DESCRIBED IN THE ANNEXED PLAT AND THE PLANS AND SPECIFICATIONS THEREFOR MEET THE MINIMUM REQUIREMENTS OF SAID VILLAGE AND HAVE BEEN APPROVED BY ALL PUBLIC AUTHORITIES HAVING JURISDICTION THEREOF.

DATED AT OAK BROOK, DUPAGE COUNTY, ILLINOIS, THIS ____ DAY OF _____, 20___.

_____
VILLAGE ENGINEER

SANITARY DISTRICT CERTIFICATE

STATE OF ILLINOIS)
)SS
COUNTY OF DUPAGE)

I, _____, SECRETARY OF THE _____ SANITARY DISTRICT, DUPAGE COUNTY, ILLINOIS, HEREBY CERTIFY THAT THERE ARE NO DELINQUENT OR UNPAID CURRENT OR FORFEITED SPECIAL ASSESSMENTS OR ANY DEFERRED INSTALLMENTS THEREOF THAT HAVE BEEN CONFIRMED AGAINST THE TRACT OF LAND INCLUDED IN THE PLAT.

DATED AT _____, ILLINOIS, THIS ____ DAY OF _____, 20___.

_____
SECRETARY

VILLAGE CLERK'S CERTIFICATE

STATE OF ILLINOIS)
)SS
COUNTY OF DUPAGE)

I, _____, VILLAGE CLERK OF THE VILLAGE OF OAK BROOK, ILLINOIS, HEREBY CERTIFY THAT THE ANNEXED PLAT WAS PRESENTED TO AND BY RESOLUTION DULY APPROVED BY THE VILLAGE BOARD OF SAID VILLAGE AT ITS MEETING HELD ON _____, 20___, AND THAT THE REQUIRED BOND OR OTHER GUARANTEE HAS BEEN POSTED FOR THE COMPLETION OF THE IMPROVEMENTS REQUIRED BY THE REGULATIONS OF SAID VILLAGE.

IN WITNESS WHEREOF I HAVE HERETO SET MY HAND AND THE SEAL OF THE VILLAGE OF OAK BROOK, ILLINOIS, THIS ____ DAY OF _____, 20___.

_____
VILLAGE CLERK

COMMONWEALTH EDISON COMPANY HEREBY CONSENTS TO SAID VACATION OF EASEMENTS ON THE _____ DAY OF _____, A.D., 20_____.

BY:_____
AGENT FOR COMMONWEALTH EDISON

ATTEST:_____

AT&T HEREBY CONSENTS TO SAID VACATION OF EASEMENTS ON THE _____ DAY OF _____, A.D., 20_____.

BY:_____
AGENT FOR AT&T
ATTEST:_____

NICOR GAS HEREBY CONSENTS TO SAID VACATION OF EASEMENTS ON THE _____ DAY OF _____, A.D., 20_____.

BY:_____
AGENT FOR NICOR

ATTEST:_____

COMCAST HEREBY CONSENTS TO SAID VACATION OF EASEMENTS ON THE _____ DAY OF _____, A.D., 20_____.

BY:_____
AGENT FOR COMCAST
ATTEST:_____

CROWN CASTLE HEREBY CONSENTS TO SAID VACATION OF EASEMENTS ON THE _____ DAY OF _____, A.D., 20_____.

BY:_____
AGENT FOR CROWN CASTLE
ATTEST:_____

VILLAGE OF OAK BROOK HEREBY CONSENTS TO SAID VACATION OF EASEMENTS ON THE _____ DAY OF _____, A.D., 20_____.

BY:_____
AGENT FOR VILLAGE OF OAK BROOK
ATTEST:_____

CERTIFICATE AS TO SPECIAL ASSESSMENTS

STATE OF ILLINOIS)
)SS
COUNTY OF DUPAGE)

I, _____, VILLAGE TREASURER OF THE VILLAGE OF OAK BROOK DO HEREBY CERTIFY THAT THERE ARE NO DELINQUENT OR UNPAID CURRENT OR FORFEITED SPECIAL ASSESSMENTS OR ANY DEFERRED INSTALLMENTS THEREOF THAT HAVE BEEN APPORTIONED AGAINST THE TRACT OF LAND INCLUDED IN THE PLAT.

DATED AT OAK BROOK, DUPAGE COUNTY, ILLINOIS, THIS ____ DAY OF _____, 20___.

_____
TREASURER

COUNTY CLERK CERTIFICATE

STATE OF ILLINOIS)
)SS
COUNTY OF DUPAGE)

I, _____ _____ COUNTY CLERK OF DUPAGE COUNTY, ILLINOIS, DO HEREBY CERTIFY THAT THERE ARE NO DELINQUENT GENERAL TAXES, NO UNPAID FORFEITED TAXES, AND NO REDEEMABLE TAX SALES AGAINST ANY OF THE LAND INCLUDED IN THE ANNEXED PLAT.
GIVEN UNDER MY HAND AND SEAL AT WHEATON, DUPAGE COUNTY, ILLINOIS, THIS ____ DAY OF _____, 20___.

_____
COUNTY CLERK

COUNTY RECORDER'S CERTIFICATE

STATE OF ILLINOIS)
)SS
COUNTY OF DUPAGE)

THIS INSTRUMENT _____ WAS FILED FOR RECORD IN THE RECORDER'S OFFICE OF DUPAGE COUNTY, ILLINOIS, ON THE ____ DAY OF _____, 20___, AT _____ O'CLOCK ___ M., AND WAS RECORDED IN BOOK _____ OF PLATS ON PAGE _____.

_____
RECORDER OF DEEDS

SURVEYOR'S CERTIFICATE

STATE OF ILLINOIS)
)SS
COUNTY OF KANE)

THIS IS TO CERTIFY THAT I, JIANFENG HUA, REGISTERED ILLINOIS LAND SURVEYOR NO. 4071, HAVE SURVEYED AND SUBDIVIDED THE FOLLOWING DESCRIBED PROPERTY:

LOTS 1 AND 2 IN MICHAEL E. SCHEID SUBDIVISION, BEING A SUBDIVISION OF PART OF SECTION 35, TOWNSHIP 39 NORTH, RANGE 11, EAST OF THE THIRD PRINCIPAL MERIDIAN, ACCORDING TO THE PLAT THEREOF RECORDED OCTOBER 28, 1999 AS DOCUMENT NO. R1999-228916, IN DUPAGE COUNTY, ILLINOIS

AS SHOWN BY THE ANNEXED PLAT, WHICH IS A CORRECT REPRESENTATION OF SAID SURVEY AND SUBDIVISION. ALL DISTANCES ARE SHOWN IN FEET AND DECIMALS THEREOF. I FURTHER CERTIFY THAT ALL REGULATIONS ENACTED BY THE PRESIDENT AND BOARD OF TRUSTEES OF THE VILLAGE OF OAK BROOK RELATIVE TO PLATS AND SUBDIVISIONS HAVE BEEN COMPLIED WITH IN PREPARATION OF THIS PLAT. I FURTHER CERTIFY THAT THE LAND IS WITHIN THE VILLAGE OF OAK BROOK (OR WITHIN 1 1/2 MILES OF THE CORPORATE LIMITS OF THE VILLAGE OF OAK BROOK) WHICH HAS ADOPTED A VILLAGE COMPREHENSIVE PLAN AND MAP AND IS EXERCISING THE POWERS AUTHORIZED BY DIVISION 12 OF ARTICLE 11 OF THE ILLINOIS MUNICIPAL CODE AS AMENDED.

I FURTHER STATE THAT THE PROPERTY IN THIS SUBDIVISION FALLS IN A SPECIAL FLOOD HAZARD AREA AS IDENTIFIED BY THE FEDERAL EMERGENCY MANAGEMENT AGENCY, AS SET FORTH ON THE FLOOD INSURANCE RATE MAP COMMUNITY PANEL NUMBER 17043C0179J EFFECTIVE DATE AUGUST 1, 2019.

GIVEN UNDER MY HAND AND SEAL AT _____, ILLINOIS, THIS ____ DAY OF _____, 20___.

_____
JIANFENG HUA
ILLINOIS PROFESSIONAL LAND SURVEYOR #4071
LICENSE EXPIRATION / RENEWAL DATE 11-30-2024

REVISION	DATE	DESC
#1	8/15/24	RECONFIGURE LOTS
#2	8/22/24	REVISE PER REVIEW LETTER DATED 8/19/24
#3	9/13/24	REMOVE MORTGAGE CERTIFICATE

BOOK:
DRAWN: TLC [MH]
REFERENCE:
DATE: 08/02/2024
DWG. SIZE: D
CHECKED: JH
PROJECT NO. 2024-0175

Ridgeline Consultants LLC
Illinois Professional Design Firm No. 184-004786
1661 Aucutt Road, Montgomery, IL 60538
PH: 630.801.7927 FAX: 630.701.1382
Jianfeng Hua, P.L.S. 4071 Expiration Date 11/30/2024
Stacy L. Stewart P.L.S. 3415 Expiration Date 11/30/2024

PREPARED FOR: MATT GALAS
PROPERTY ADDRESS: 3601 & 3505 ADAMS ROAD OAKBROOK, ILLINOIS

SHEET 3 OF 3

Boundary/Topographic Survey and Demolition Plan

PROPERTY DESCRIPTION:

LOTS 1 AND 2 IN MICHAEL E. SCHEID SUBDIVISION, BEING A SUBDIVISION OF PART OF SECTION 35, TOWNSHIP 39 NORTH, RANGE 11, EAST OF THE THIRD PRINCIPAL MERIDIAN, ACCORDING TO THE PLAT THEREOF RECORDED OCTOBER 28, 1999 AS DOCUMENT NO. R1999-228916, IN DUPAGE COUNTY, ILLINOIS

North
Scale 1" = 20'

20' 0' 20' 40'

ABBREVIATION LEGEND

BSL = BUILDING SETBACK LINE
C/L = CENTERLINE
CPP = CORRUGATED PLASTIC PIPE
DIP = DUCTILE IRON PIPE
E = EAST
E'LY = EASTERLY
FEX = FENCE CORNER
FFE = FINISHED FLOOR ELEVATION
(M) = MEASURED DISTANCE
MT = MULTI TRUNK
N = NORTH
N'LY = NORTHERLY
P.U.E. = PUBLIC UTILITY EASEMENT
(R) = RECORD DISTANCE
RCP = REINFORCED CONCRETE PIPE
R.O.W. = RIGHT OF WAY
S = SOUTH
S'LY = SOUTHERLY
T/F = TOP OF FOUNDATION ELEVATION
T/PIPE = TOP OF PIPE
W = WEST
W'LY = WESTERLY

SYMBOL LEGEND

= ASPHALT
= B BOX
= BRICK
= BUBBLER
= CONCRETE
= DECIDUOUS TREE
= GAS VALVE
= GAS WARNING POST
= GRAVEL
= HYDRANT
= MAIL BOX
= PINE TREE
= SANITARY MANHOLE
= SIGN
= WATER MANHOLE
= WATER VALVE
= WOOD
= WOOD UTILITY POLE

LINE TYPE LEGEND

ADJACENT LOT LINE =
BOUNDARY LINE =
BUILDING SETBACK =
EASEMENT =
FENCE =
CENTERLINE BETWEEN POLES WITH OVERHEAD WIRES =
SANITARY SEWER =
STORM SEWER =
TREE OR BRUSH LINE =
WATER MAIN =

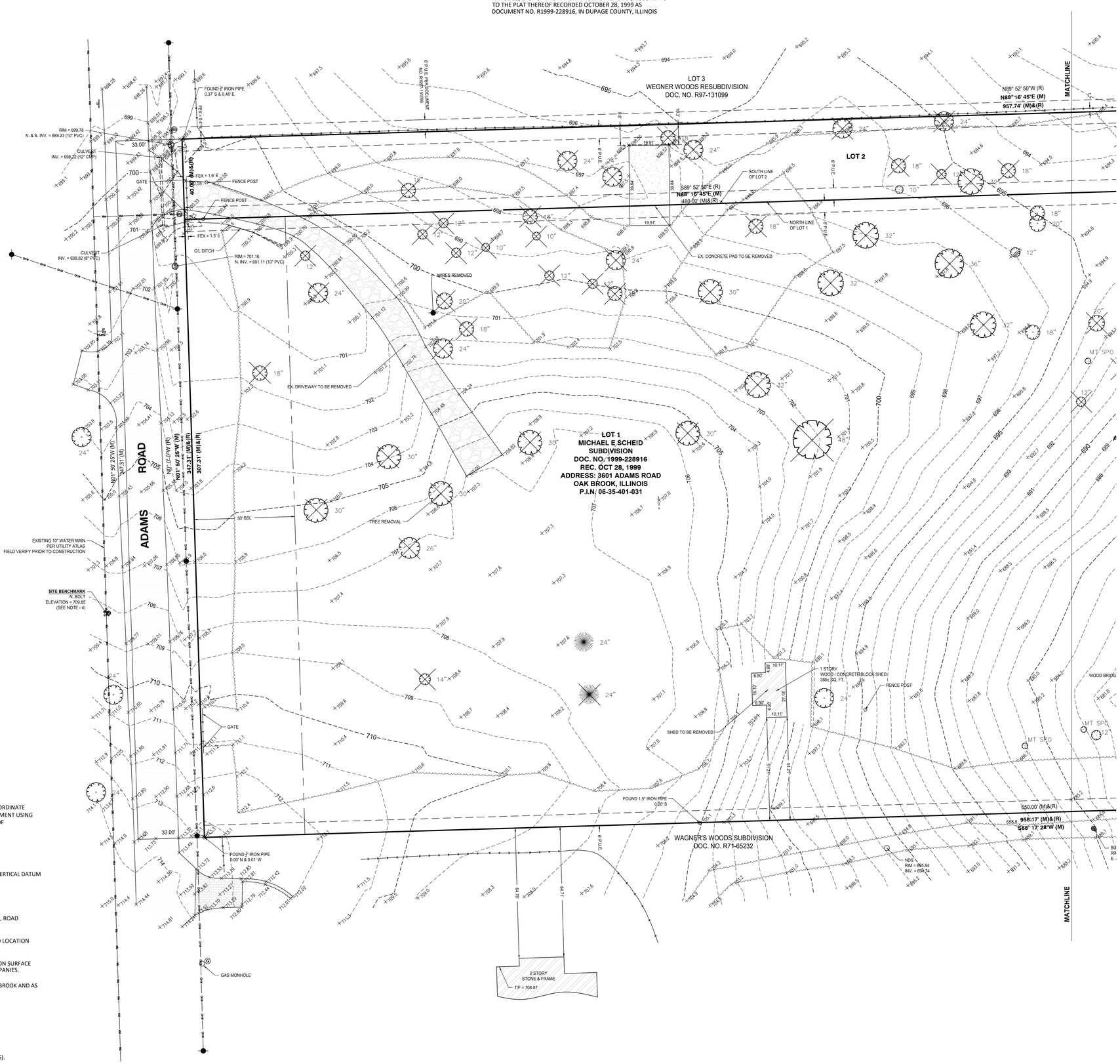

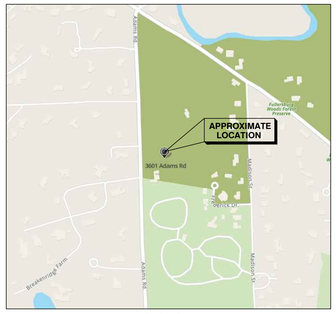

Vicinity Map
(No Scale)

NOTES:

1) ALL MEASURED BEARINGS SHOWN HEREON ARE BASED ON NAD 83 ILLINOIS COORDINATE SYSTEM, EAST ZONE (2011 CORRECTION) AS DETERMINED BY USE OF GPS EQUIPMENT USING TRIMBLES VRS NETWORK AND EQUIPMENT ALONG WITH THE RECORDED PLAT OF SUBDIVISION.

2) CONTOUR INTERVAL = 1.0'

3) ELEVATIONS HEREON REFER TO NAVD 88 DATUM.

4) SOURCE BENCHMARK: VERTICAL ELEVATIONS SHOWN HEREON ARE IN NAVD 88 VERTICAL DATUM AS ESTABLISHED PER NGS OPUS-RS SOLUTION REPORT.

SITE BENCHMARK: N. BOLT ON FIRE HYDRANT. (AS SHOWN ON DRAWING)
ELEVATION = 709.85

5) A CURRENT TITLE REPORT WAS NOT FURNISHED, THEREFORE, ALL RESTRICTIONS, ROAD DEDICATIONS, ROAD VACATIONS, AND EASEMENTS MAY NOT BE SHOWN.

6) ALL UTILITIES MAY NOT BE SHOWN. CALL J.U.L.I.E. AT 1-800-892-0123 FOR FIELD LOCATION OF UNDERGROUND UTILITY LINES PRIOR TO ANY DIGGING OR CONSTRUCTION.

7) LOCATION OF ALL UTILITIES AND SUBSTRUCTURES ARE APPROXIMATELY BASED ON SURFACE EVIDENCE AND EXISTING PLANS, AS PROVIDED BY THE CLIENT AND UTILITY COMPANIES.

8) THIS PROPERTY MAY BE WITHIN THE CORPORATE LIMITS OF THE VILLAGE OF OAK BROOK AND AS SUCH IS SUBJECT TO ZONING AND BUILDING RESTRICTIONS.

9) SURVEY FIELD WORK COMPLETED ON 5-17-2024.

10) ALL TREES LESS THAN 10 INCHES IN DIAMETER MAY NOT SHOWN HEREON.

11) PARCELS CONTAIN APPROXIMATELY 332,805 SQUARE FEET OR 7.64 ACRES.

12) ALL MONUMENT TIES ARE MEASURED PERPENDICULAR TO THE PROPERTY LINE(S).

REVISION	DATE	DESC
#1	8/1/24	REVISED DIMENSION ON NORTH LINE OF LOT 1
#2	8/4/24	REVISED PROPERTY ADDRESS

BOOK:
DRAWN: TM/DMH
DATE: 5-20-2024
DWG. SIZE: E1
CHECKED: JH
PROJECT NO. 2024-0175

Ridgeline Consultants LLC
Illinois Professional Design Firm No. 184-004766
1000 Jorie Blvd, Suite 100 Oak Brook, IL 60523
PH: 630.801.7927 FAX: 630.701.1383
Jeffrey A. Hansen P.L.S. 3435 Expiration Date 11/30/2024
Stacy L. Stewart P.L.S. 3415 Expiration Date 11/30/2024

PREPARED FOR:
MATT GALAS
PROPERTY ADDRESS:
3601 & 3505 ADAMS ROAD
OAK BROOK, ILLINOIS

SHEET 1 OF 4

Boundary/Topographic Survey and Demolition Plan

North
Scale 1" = 20'

20' 0' 20' 40'

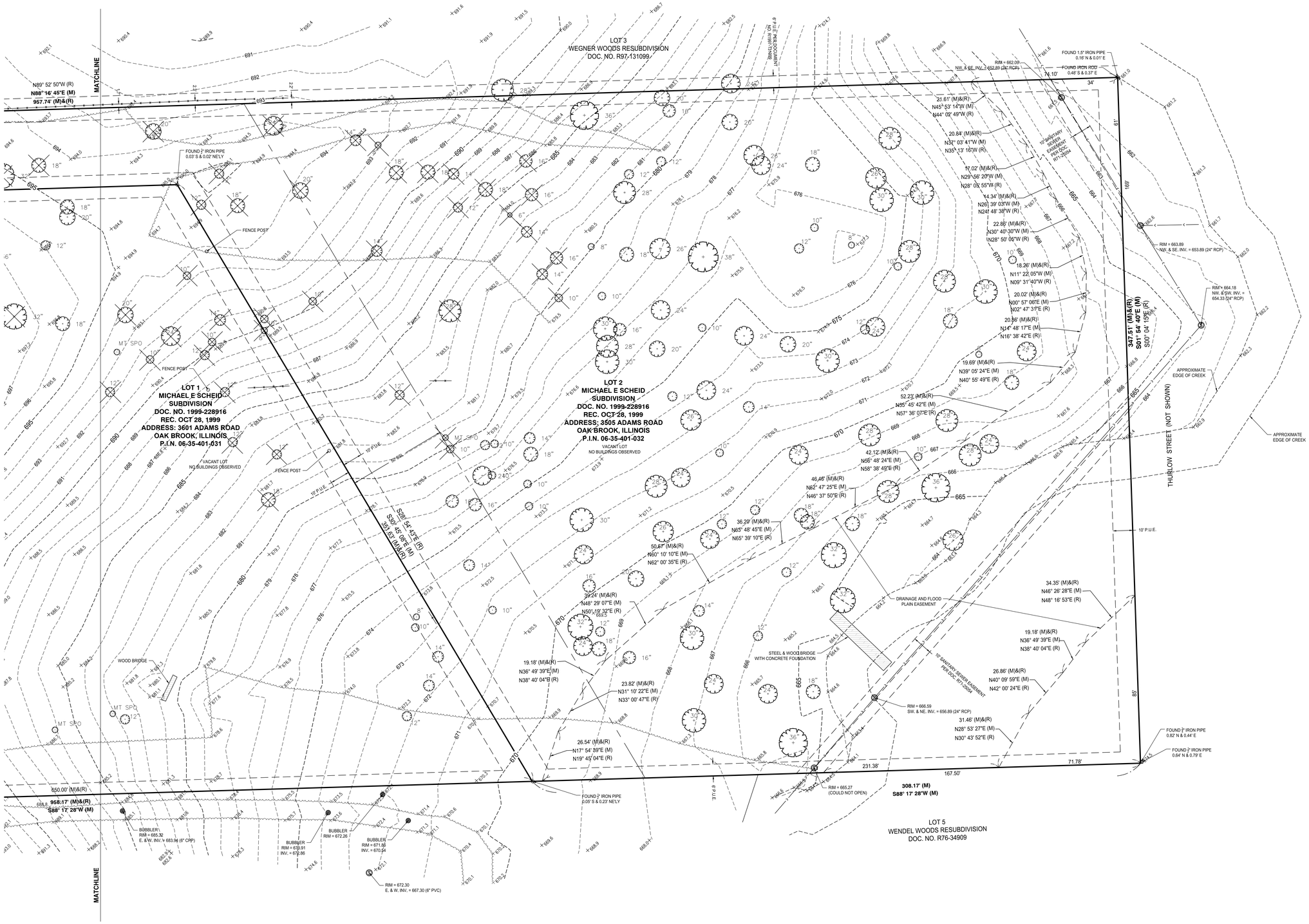

REVISION	DATE	DESC
#1	8/1/24	REVISED DIMENSION ON NORTHLINE OF LOT 1
#2	8/05/24	REVISED PROPERTY ADDRESS
#3		
#4		

BOOK:
DRAWN: TMSMITH
DWG. SIZE: E1
CHECKED: JH
REVISED DATE:
DATE: 5-20-2024
PROJECT NO. 2024-0175

Ridgeline Consultants LLC
Illinois Professional Design Firm No. 184-004766
1011 Plaza Drive, Suite 200, Schaumburg, IL 60173
PH: 630.851.7927 FAX: 630.701.1383
Jeffrey A. Hansen, President, Illinois P.L.S. No. 3416
Stacy L. Stewart P.L.S. 3415 Expiration Date 11/30/2024

PREPARED FOR: MATT GALAS
PROPERTY ADDRESS: 3601 & 3505 ADAMS ROAD OAK BROOK, ILLINOIS

SHEET 2 OF 4

Preliminary Engineering Plan

IMPERVIOUS AREA TABLE - LOT 1					
EXISTING CONDITION*			PROPOSED CONDITION		
IMPERVIOUS	15,705 SF	10.3%	IMPERVIOUS	17,368 SF	11.4%
EX. BUILDING	4,518 SF		PR. BUILDING	6,470 SF	
EX. DRIVEWAY	7,441 SF		PR. DRIVEWAY	8,001 SF	
EX. CONCRETE WALK	283 SF		PR. POOL	600 SF	
EX. POOL	2,758 SF		PR. TERRACE	2,297 SF	
EX. ACCESSORY BUILDING	295 SF				
EX. GARAGE	346 SF				
EX. FLAGSTONE AREA	64 SF				
PERVIOUS	136,820 SF	89.7%	PERVIOUS	135,157 SF	88.6%
TOTAL	152,525 SF	100.0%	TOTAL	152,525 SF	100.0%
NET NEW IMPERVIOUS AREA = 1,663 SF < 2500 SF THRESHOLD OF PCBMP REQUIREMENT, PCBMP IS NOT REQUIRED.					

* EXISTING IMPERVIOUS AREA IS MEASURED FROM TRACING 1956 AERIAL IMAGE WHICH APPEARS TO BE CONSISTENT WITH 1993 AERIAL IMAGE WHICH IS TOO BLURRED TO BE TRACED.

PROPERTY DESCRIPTION:

LOTS 1 AND 2 IN MICHAEL E. SCHEID SUBDIVISION, BEING A SUBDIVISION OF PART OF SECTION 35, TOWNSHIP 39 NORTH, RANGE 11, EAST OF THE THIRD PRINCIPAL MERIDIAN, ACCORDING TO THE PLAT THEREOF RECORDED OCTOBER 28, 1999 AS DOCUMENT NO. R1999-228916, IN DUPAGE COUNTY, ILLINOIS

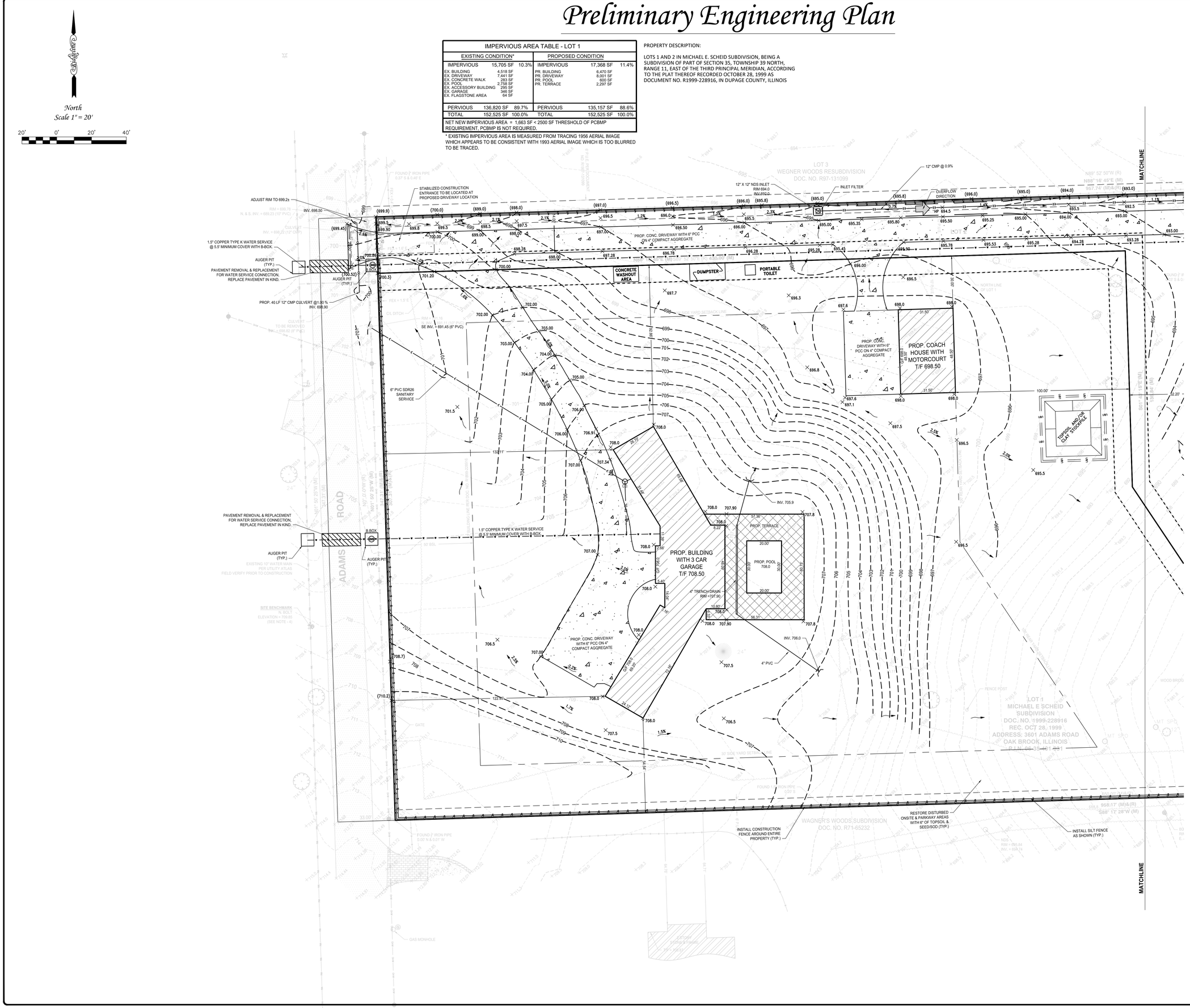

STATE OF ILLINOIS)
COUNTY OF KANE) SS

I, JIUN-GUANG LIN OF RIDGELINE CONSULTANTS, LLC, DO HEREBY RENDER MY OPINION THAT THE DEVELOPMENT MEETS THE MINIMUM CRITERIA FOR STORMWATER MANAGEMENT IN ACCORDANCE WITH DUPAGE COUNTY STORMWATER MANAGEMENT ORDINANCE.

DATED AT MONTGOMERY, ILLINOIS ON SEPTEMBER 13TH, 2024.

JIUN-GUANG LIN
062-057024
LICENSED PROFESSIONAL ENGINEER
STATE OF ILLINOIS

Expires 11/30/2025

ILLINOIS PE LICENCE NO. 062-057024

PLANS PREPARED FOR:
MATT GALAS
PHONE: (847)-204-6880
432 SOUTH PRAIRIE AVE.
ELMHURST IL 60126

REVISION	DATE	DESC.

BOOK:
DRAWN: CWR
REVIEWED:
DATE: 9-13-2024
DWG. SIZE: E1
CHECKED: JGL
PROJECT NO. 2024-0175

Ridgeline Consultants LLC
Illinois Professional Design Firm No. 184-004766
1800 Wilson Blvd, Suite 200, Montgomery, IL 60538
Ph: 630.801.7027 FAX: 630.701.1383
Jiun-Guang Lin, P.E. Expiration Date 11/30/2024
Stacy L. Stewart P.L.S. 3416 Expiration Date 11/30/2024

Ridgeline CONSULTANTS
CONSULTING ENGINEERS · LAND SURVEYORS

PREPARED FOR:
MATT GALAS
PROPERTY ADDRESS:
3601 & 3505 ADAMS ROAD
OAK BROOK, ILLINOIS

SHEET 3 OF 4

Preliminary Engineering Plan

North
Scale 1" = 20'

20' 0' 20' 40'

IMPERVIOUS AREA TABLE - LOT 2					
EXISTING CONDITION*			PROPOSED CONDITION		
IMPERVIOUS	747 SF	0.4%	IMPERVIOUS	21,921 SF	12.2%
EX. GARAGE	452 SF		PR. BUILDING/GARAGE	6,170 SF	
EX. DRIVEWAY	295 SF		PR. DRIVEWAY	13,376 SF	
			PR. TERRACE/WALL	2,375 SF	
PERVIOUS	179,533 SF	99.6%	PERVIOUS	158,359 SF	87.8%
TOTAL	180,280 SF	100.0%	TOTAL	180,280 SF	100.0%

NET NEW IMPERVIOUS AREA = 21,921 SF > 2500 SF THRESHOLD OF PCBMP REQUIREMENT, PCBMP IS REQUIRED.
REQUIRED PCBMP VOLUME: 21,921 X 1.25" =2,285 CF
PROVIDED PCBMP VOLUME VIA TWO 40' X 20' X 4'(D) DRYWELLS = 2304 CF (36% POROSITY ASSUMED)

* EXISTING IMPERVIOUS AREA IS MEASURED FROM TRACING 1956 AERIAL IMAGE WHICH APPEARS TO BE CONSISTENT WITH 1993 AERIAL IMAGE WHICH IS TOO BLURRED TO BE TRACED.

REVISION	DATE	DESC.

BOOK:	
DRAWN: CJW	DWG. SIZE: E1
REVIEW: MGC	CHECKED: JKL
DATE: 9-13-2024	
PROJECT NO.	2024-0175

Ridgeline Consultants LLC
Illinois Professional Design Firm No. 184-004766
Illinois Professional Land Surveyor No. 184-003924
PH: 630.801.7927 FAX: 630.701.1383
Jason Kleinschmidt, President, PLS, CFM
Stacy L. Stewart P.L.S. 3416 Expiration Date 11/30/2024

PREPARED FOR:
MATT GALAS
PROPERTY ADDRESS: 3601 & 3505 ADAMS ROAD
OAK BROOK, ILLINOIS

SHEET 4 OF 4

Boundary and Topographic Survey

PROPERTY DESCRIPTION:

LOTS 1 AND 2 IN MICHAEL E. SCHEID SUBDIVISION, BEING A SUBDIVISION OF PART OF SECTION 35, TOWNSHIP 39 NORTH, RANGE 11, EAST OF THE THIRD PRINCIPAL MERIDIAN, ACCORDING TO THE PLAT THEREOF RECORDED OCTOBER 28, 1999 AS DOCUMENT NO. R1999-228916, IN DUPAGE COUNTY, ILLINOIS

North
Scale 1" = 20'

20' 0' 20' 40'

ABBREVIATION LEGEND

BSL = BUILDING SETBACK LINE
C/L = CENTERLINE
CPP = CORRUGATED PLASTIC PIPE
DIP = DUCTILE IRON PIPE
E = EAST
E'LY = EASTERLY
FEX = FENCE CORNER
FFE = FINISHED FLOOR ELEVATION
(M) = MEASURED DISTANCE
MT = MULTI TRUNK
N = NORTH
N'LY = NORTHERLY
P.U.E. = PUBLIC UTILITY EASEMENT
(R) = RECORD DISTANCE
RCP = REINFORCED CONCRETE PIPE
R.O.W. = RIGHT OF WAY
S = SOUTH
S'LY = SOUTHERLY
T/F = TOP OF FOUNDATION ELEVATION
T/PIPE = TOP OF PIPE
W = WEST
W'LY = WESTERLY

SYMBOL LEGEND

= ASPHALT
= B BOX
= BRICK
= BUBBLER
= CONCRETE
= DECIDUOUS TREE
= GAS VALVE
= GAS WARNING POST
= GRAVEL
= HYDRANT
= MAIL BOX
= PINE TREE
= SANITARY MANHOLE
= SIGN
= WATER MANHOLE
= WATER VALVE
= WOOD
= WOOD UTILITY POLE

LINE TYPE LEGEND

ADJACENT LOT LINE =
BOUNDARY LINE =
BUILDING SETBACK =
EASEMENT =
FENCE =
CENTERLINE BETWEEN POLES WITH OVERHEAD WIRES =
SANITARY SEWER =
STORM SEWER =
TREE OR BRUSH LINE =
WATER MAIN =

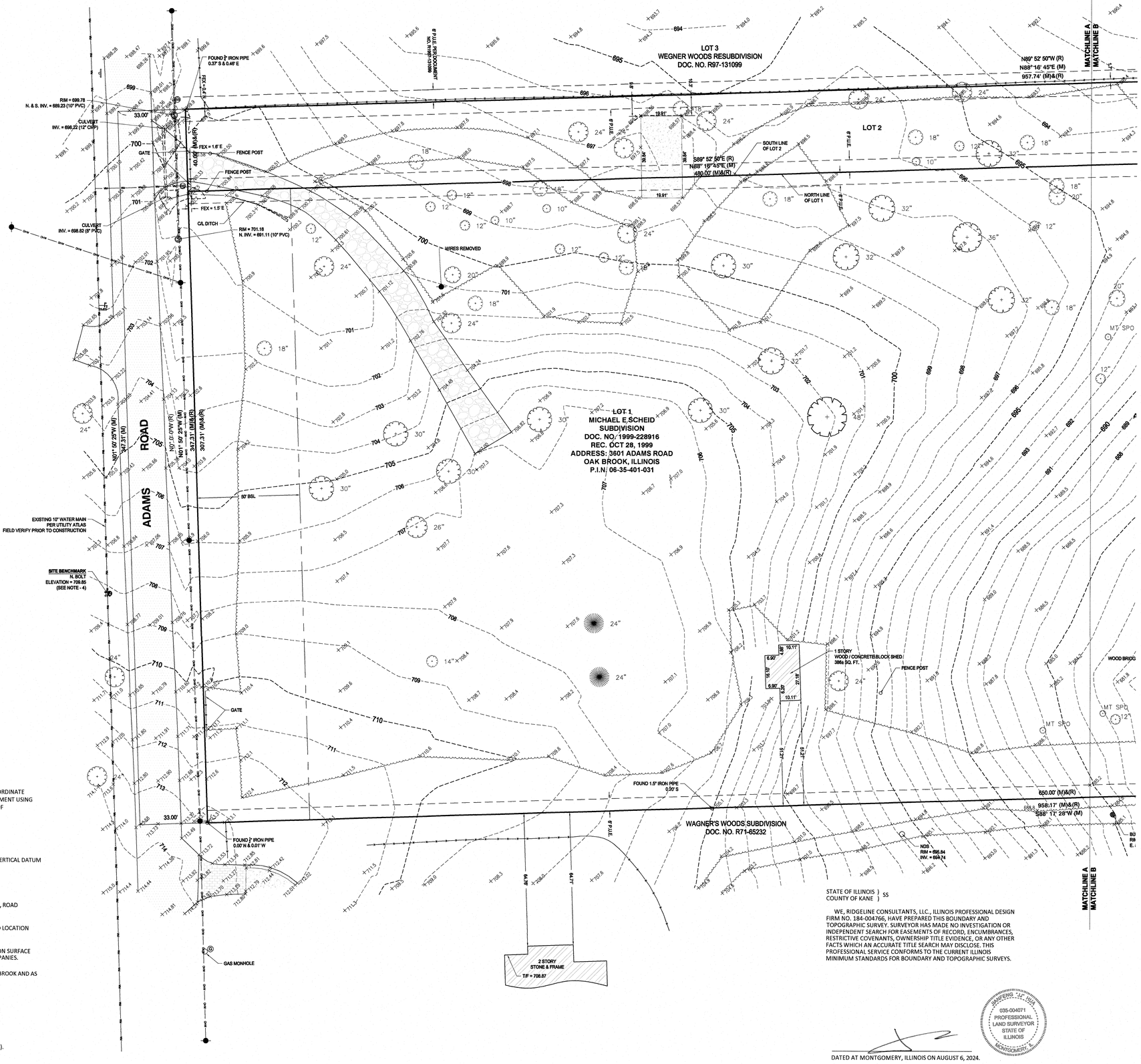

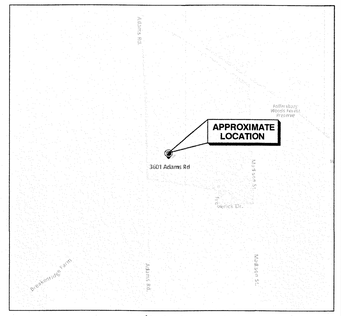

Vicinity Map
(No Scale)

NOTES:

1) ALL MEASURED BEARINGS SHOWN HEREON ARE BASED ON NAD 83 ILLINOIS COORDINATE SYSTEM, EAST ZONE (2011 CORRECTION) AS DETERMINED BY USE OF GPS EQUIPMENT USING TRIMBLES VRS NETWORK AND EQUIPMENT ALONG WITH THE RECORDED PLAT OF SUBDIVISION.

2) CONTOUR INTERVAL = 1.0'

3) ELEVATIONS HEREON REFER TO NAVD 88 DATUM.

4) SOURCE BENCHMARK: VERTICAL ELEVATIONS SHOWN HEREON ARE IN NAVD 88 VERTICAL DATUM AS ESTABLISHED PER NGS OPUS-RS SOLUTION REPORT.

SITE BENCHMARK: N. BOLT ON FIRE HYDRANT. (AS SHOWN ON DRAWING)
ELEVATION = 709.85

5) A CURRENT TITLE REPORT WAS NOT FURNISHED, THEREFORE, ALL RESTRICTIONS, ROAD DEDICATIONS, ROAD VACATIONS, AND EASEMENTS MAY NOT BE SHOWN.

6) ALL UTILITIES MAY NOT BE SHOWN. CALL J.U.L.I.E. AT 1-800-892-0123 FOR FIELD LOCATION OF UNDERGROUND UTILITY LINES PRIOR TO ANY DIGGING OR CONSTRUCTION.

7) LOCATION OF ALL UTILITIES AND SUBSTRUCTURES ARE APPROXIMATELY BASED ON SURFACE EVIDENCE AND EXISTING PLANS, AS PROVIDED BY THE CLIENT AND UTILITY COMPANIES.

8) THIS PROPERTY MAY BE WITHIN THE CORPORATE LIMITS OF THE VILLAGE OF OAK BROOK AND AS SUCH IS SUBJECT TO ZONING AND BUILDING RESTRICTIONS.

9) SURVEY FIELD WORK COMPLETED ON 5-17-2024.

10) ALL TREES LESS THAN 10 INCHES IN DIAMETER MAY NOT SHOWN HEREON.

11) PARCELS CONTAIN APPROXIMATELY 332,805 SQUARE FEET OR 7.64 ACRES.

12) ALL MONUMENT TIES ARE MEASURED PERPENDICULAR TO THE PROPERTY LINE(S).

STATE OF ILLINOIS }
COUNTY OF KANE } SS

WE, RIDGELINE CONSULTANTS, LLC., ILLINOIS PROFESSIONAL DESIGN FIRM NO. 184-004766, HAVE PREPARED THIS BOUNDARY AND TOPOGRAPHIC SURVEY. SURVEYOR HAS MADE NO INVESTIGATION OR INDEPENDENT SEARCH FOR EASEMENTS OF RECORD, ENCUMBRANCES, RESTRICTIVE COVENANTS, OWNERSHIP TITLE EVIDENCE, OR ANY OTHER FACTS WHICH AN ACCURATE TITLE SEARCH MAY DISCLOSE. THIS PROFESSIONAL SERVICE CONFORMS TO THE CURRENT ILLINOIS MINIMUM STANDARDS FOR BOUNDARY AND TOPOGRAPHIC SURVEYS.

DATED AT MONTGOMERY, ILLINOIS ON AUGUST 6, 2024.

JIANFENG "JF" HUA
035-004071
PROFESSIONAL LAND SURVEYOR
STATE OF ILLINOIS
MONTGOMERY, IL

REVISION	DATE	DESC
#1	8/1/24	REVISED DIMENSION ON NORTH LINE OF LOT 1
#2	8/6/24	REVISED PROPERTY ADDRESS
#3		
#4		

BOOK:
DWG. SIZE: E1
DRAWN: TM/MM
CHECKED: JH
REVISED:
DATE: 5-20-2024
PROJECT NO. 2024-0175

Ridgeline Consultants LLC
1555 Professional Design Firm No. 184-004766
Montgomery, Illinois 60538
PH: 630.801.7607 FAX: 630.701.1380
Jianfeng Hua P.L.S. 3527 Expiration Date 11/30/2024
Stacy L. Stewart P.L.S. 3416 Expiration Date 11/30/2024

Ridgeline CONSULTANTS
CONSULTING ENGINEERS • LAND SURVEYORS

PREPARED FOR: MATT GALAS
PROPERTY ADDRESS: 3601 & 3505 ADAMS ROAD OAK BROOK, ILLINOIS

SHEET 1 OF 2

Boundary and Topographic Survey

North
Scale 1" = 20'

20' 0' 20' 40'

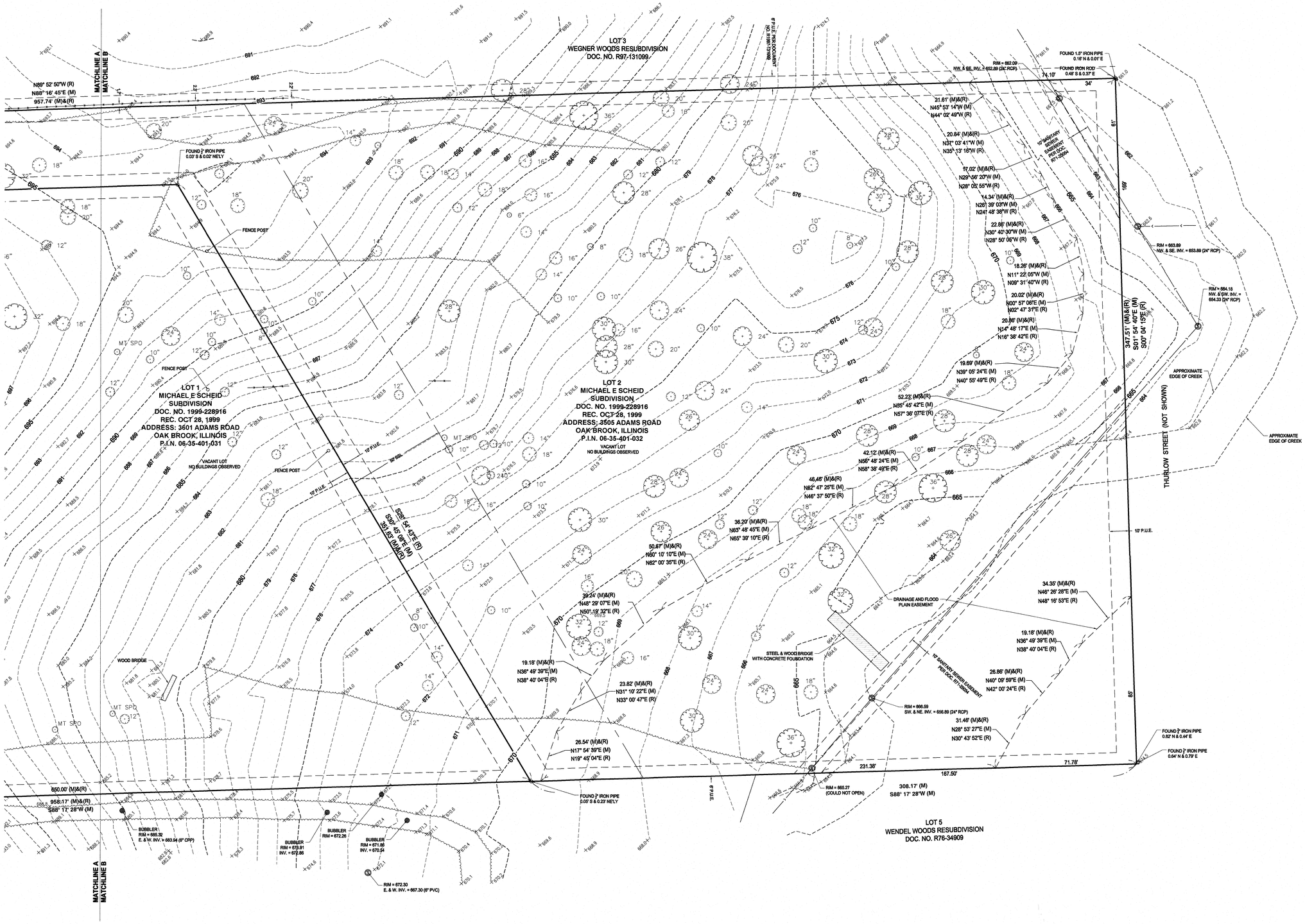

REVISION	DATE	DESC
#1	8/7/24	REVISED DIMENSION ON NORTH LINE OF LOT 1
#2	9/5/24	REVISED PROPERTY ADDRESS

BOOK:	DWG. SIZE: E1
DRAWN: TM/DMH	CHECKED: JH
REFERENCE:	
DATE: 6-20-2024	
PROJECT NO.	2024-0175

Ridgeline Consultants LLC
1000 Professional Design Firm No. 184-005795
Mailing: 1000 Professional Drive, Suite 1
Ph: 630.851.7007 FAX: 630.701.1380
Jeffrey Hamburg P.L.S. 3477 Expiration Date 11/30/2024
Stacy L. Stewart P.L.S. 3416 Expiration Date 11/30/2024

Ridgeline CONSULTANTS
CONSULTING ENGINEERS • LAND SURVEYORS

PREPARED FOR:
MATT GALAS

PROPERTY ADDRESS:
3601 & 3505 ADAMS ROAD
OAK BROOK, ILLINOIS

SHEET 2 OF 2

ITEM 8.B.
BOARD OF TRUSTEES MEETING
SAMUEL E. DEAN BOARD ROOM
BUTLER GOVERNMENT CENTER
1200 OAK BROOK ROAD
OAK BROOK, ILLINOIS
630-368-5000

AGENDA ITEM

Board of Trustees Regular Meeting
of
October 22, 2024

SUBJECT: 100 Oakbrook Center – Rivian EV – Setback Variation

FROM: Rebecca Von Drasek, Development Services Director

BUDGET SOURCE/BUDGET IMPACT: N/A

RECOMMENDED MOTION: I move that the Village Board review the recommendation from the Planning & Zoning Commission for the requested variation from Section 13-7B-3.B.1.a of the Zoning Regulations to permit and allow EV Chargers and associated equipment near Rt 83 on the Oakbrook Center property.

A positive recommendation would be subject to the following:

1. The design and placement of the proposed EV charging dispensers, equipment cabinets, transformers, and landscaping shall be in substantial conformance with the plans as submitted and approved.
2. Add the condition "Notwithstanding the attached exhibits, the applicant shall meet all Village Ordinance requirements at the time of building permit application except as specifically varied or waived."

Background/History:

At their meeting on October 2, 2024, the Planning & Zoning Commission (P&Z) held the required public hearing on a petition submitted by SSC, on behalf of Rivian, with the permission of Brookfield Properties. The request is to install nine (9) charging dispensers and one (1) trailer stall within the 300' setback from Rt 83 on the west side of Oakbrook Center. The property is zoned B-2, Regional Shopping Center District, and is improved with a mall.

The applicant is seeking the variation in order to build the Commercial Automobile Charing Facility within 45'1" of Rt. 83. The Code prohibits structures within 300' of Rt. 83, as proposed the improvements do not comply with the Village Code.

The petitioner's application material has been provided and includes the case file with the P&Z minutes for a detailed description and rationale justifying the request. All interested parties were mailed proper notification for the public hearing. One member of the public spoke against the variation request at the public hearing.

By a vote of 5 to 2, the Planning & Zoning Commission recommended approval of the Variation.

The petitioner has submitted an additional rendering for the Board's review which depicts the property with and without the improvements.

Recommendation:
If the Board concurs with the P&Z Commission a motion to approve the Variation should be subject to the following:

1. The design and placement of the proposed EV charging dispensers, equipment cabinets, transformers, and landscaping shall be in substantial conformance with the plans as submitted and approved.
2. Add the condition "Notwithstanding the attached exhibits, the applicant shall meet all Village Ordinance requirements at the time of building permit application except as specifically varied or waived."

If the Board determines that the petitioner has not satisfied the required standards for a Variation, a super-majority vote is required to deny the request.

Attachments:
1. Rivian EV Exhibits for BOT

VILLAGE OF OAK BROOK Illinois

BUTLER GOVERNMENT CENTER
1200 OAK BROOK ROAD
OAK BROOK, ILLINOIS 60523

October 15, 2024

Village President and Board of Trustees
Village of Oak Brook
1200 Oak Brook Road
Oak Brook, IL 60523

Subject: 100 Oakbrook Center – Rivian EV – Variation – To allow EV charging equipment within the 300' setback from Rt. 83.

Dear Village President and Board of Trustees:

Background

At its meeting on October 2, 2024 the Planning & Zoning Commission held the required public hearing on a petition from Rivian EV who has a lease agreement with Oakbrook Center for the installation of a commercial automobile charging facility, including nine (9) charging dispensers and one (1) trailer stall. Rivian proposes to install the equipment within the 300' setback from Rt. 83. The requested relief to the Zoning Regulations are to the following:

Section: 13-7B-3(B)(1)(a)

B. Yards:

1. No structure, other than signs as provided for in subsection 13-7B-4A of this article shall be erected or maintained within the following distances:

a. Three hundred feet (300') from the right-of-way of 22nd Street or Route 83 (Kingery Expressway)

The property is located in the B-2 Regional Shopping Center District and the applicant is seeking the variation in order to install the equipment enclosure at an approximate setback of 45'1" from the West property line. The charging dispenser closest to the property line will be setback approximately 56-feet.

Public Comment

All interested parties were notified of the public meeting. One resident spoke in opposition of the request.

Planning & Zoning Commission Discussion and Recommendation

The Planning & Zoning Commission recognized the hardship and unique circumstances for EV charging stations. They reviewed and deliberated on the proposed variation. The applicant addressed the standards in writing on pages C-C.1 of the case file and by their testimony at the public hearing.

By a vote of 5 to 2, the Planning & Zoning Commission recommended approval of the requested variation to allow the Rivian EV charging equipment within the 300' setback from Rt. 83.

1. The design and placement of the proposed EV charging dispensers, equipment cabinets, transformers, and landscaping shall be in substantial conformance with the plans as submitted and approved.
2. Add the condition "Notwithstanding the attached exhibits, the applicant shall meet all Village Ordinance requirements at the time of building permit application except as specifically varied or waived."

Very truly yours,

_____
Jeff Bulin
Acting Chairman
Planning & Zoning Commission

lines, the lots will remain two separate single-family lots. He noted that adjusting the lot line would provide a better scenario to build a home on the back lot and allow saving mature trees.

Member Cappetta mentioned that she lives behind the lot and had no objection to the proposed amendment.

Acting Chairman Bulin asked why the plans showed removing several trees from lot-1. He reminded Mr. Galas to preserve as many trees as possible.

Mr. Galas replied that there were no plans to take down any trees and the house plans have not been designed.

Member Pontrelli questioned any water runoff issues once the lots are amended.

Director Von Drasek explained that moving the lot line and shifting the house on 3505 Adams Road forward minimizes regrading of the lot.

Motioned by Member Hasan, seconded by Member Cappetta to recommend approval of the requested subdivision amendment, subject to the following conditions:

1. All other provisions of Resolution R-715 and covenants will remain in full force and effect.
2. Final engineering approval prior to recording of the Plat.
3. Add the condition "Notwithstanding the attached exhibits, the applicant shall meet all Village Ordinance requirements at the time of building permit application except as specifically varied or waived."

ROLL CALL:

Ayes: 7 – Acting Chairman Bulin, Members Cappetta, DiBernardo, Hasan, Nimry, Pontrelli and Wilczak. Motion carried.

Absent: 2 - Chairman Iyer and Vice Chairman Ziemer

5.

B. 100 OAKBROOK CENTER – RIVIAN EV - SETBACK VARIATIONS

100 OBC – RIVIAN EV SETBACK VAR

Director Von Drasek gave a brief overview of the proposed petition.

Mary Goldberg, 56 Overlook Drive, Golf, IL, Senior Manager of Real Estate for Rivian provided a brief background on the Illinois based company. She indicated that existing EV charging stations may be subpar and that Rivian Adventure chargers are designed and built in-house, and she considered them an elevated product. The chargers would be open to any and all EVs if the petition were approved. When searching for the perfect destination, she felt Oak Brook was optimal due highway access and the premium amenities. There are existing EV chargers at Oakbrook Center, but she

explained those are much slower chargers (3 to 5 hours) than those proposed Rivian EV fast chargers (30 to 45 minutes).

Ms. Goldberg presented several slides with the site plan, existing project examples and the proposed renderings for 6 charging stations. She stated that Rivian had a close relationship with Brookfield Properties malls across the country and was excited and eager to be at Oakbrook Center.

Member Wilczak had concerns due to a fuel line proximity to the Rivian equipment and asked if Rivian has been in contact with the pipeline owner.

Ms. Goldberg said that they were very aware of the fuel line and do not anticipate any issues. She said they would look into reaching out to the owner of the pipeline.

Member Cappetta asked about the total number of charging stations if they were to expand due to demand.

Ms. Goldberg said there would be a total of nine (9). There would be six initial stations and three pre-line conduits for future stalls.

Member Cappetta felt that the petition did not meets many of the variation standards and asked if there would be a fee for using the stations.

Members discussed the variation standards and the need for the EV charging stations.

Ms. Goldberg stated there would be a fee. She said she drove through the Oak Brook area and noticed all EV charging stations were occupied other than one being broken. She explained that the Rivian charging stations were not a revenue generating business, Rivian is in the car building business. Charging stations are necessary and hopefully entices EV car owners.

Acting Chairman did not feel the charging stations and equipment would change the view from Rt. 83 and that the landscape plan was appropriate.

Member Wilczak asked about the power supply and was again concerned about the pipeline.

Director Von Drasek mentioned that a state permit would be required during a building permit review.

Member Pontrelli questioned the back side of the charging stations having no sign or advertising. He proposed prohibiting any advertising signage.

Ms. Goldberg stated the back side will remain blank and that they were not trying to advertise, and only create an amenity.

Motioned by Member Hasan, seconded by Member Nimry to recommend the approval for the requested variations, subject to the following conditions:

1. The design and placement of the proposed EV charging dispensers, equipment cabinets, transformers, and landscaping shall be in substantial conformance with the plans as submitted and approved and no future signs will be added.

2. Add the condition "Notwithstanding the attached exhibits, the applicant shall meet all Village Ordinance requirements at the time of building permit application except as specifically varied or waived."

ROLL CALL:

Ayes:	5		Acting Chairman Bulin, Members Cappetta, Hasan, Pontrelli and DiBernardo and Nimry. Motion carried.
Nays:	2		Members Cappetta and Wilczak
Absent:	2	-	Chairman Iyer and Vice Chairman Ziemer

Acting Chairman Bulin announced that the public hearing was concluded.

5.

C. 2222 35TH STREET – MAP AMENDMENT

2222 35TH ST MAP AMENDMENT

Rob Day, representative for Midwest Club HOA explained that 2222 35th Street was originally envisioned to be part of Midwest Club but the property owners refused to sell it over many years. When the property was advertised for sale, Midwest Club HOA made an offer and were contingent to purchase it. They were waiting to have the Map Amendment approved from R-1 to R-3 District. He explained the fine details including the desire to annex into Midwest Club, subdivide into three lots and close the existing entrance on 35th Street.

Attorney Castaldo III mentioned that Mr. Day did not have authority to discuss the property until the contingencies were resolved and recommended tabling the petition. If the petition returned, it would have to be re-noticed.

Director Von Drasek noted that when the petition was received, there was a contingent contract which has now been revoked.

Motioned by Member Hasan, seconded by Member Nimry to table to petition and re-notice if the petitioner re-applies.

ROLL CALL:

Ayes:	7	–	Acting Chairman Bulin, Members Cappetta, DiBernardo, Hasan, Nimry, Pontrelli and Wilczak. Motion carried.
Absent:	2	-	Chairman Iyer and Vice Chairman Ziemer

6. OTHER BUSINESS

OTHER BUSINESS

There was no other business.

7. PUBLIC COMMENT

PUBLIC COMMENT

Mustafa Ali, 3 Pembroke Lane said he wants to install a ground-mount solar panel for his home and asked that the commission not reject it within the code amendments. He referenced an Illinois State Statute regarding solar panels. He also mentioned a stop sign proposals in his subdivision and noted that he was opposed to them and suggested a traffic study. He was also opposed to the Rivian EV charging stations.

Members discussed speeding in subdivisions.

8. ADJOURNMENT:

ADJOURNMENT

Motion by Member Hasan, seconded by Member Cappetta to adjourn the meeting at 7:02PM. VOICE VOTE: Motion carried.

ATTEST:

/s/ Rebecca Von Drasek
Rebecca Von Drasek
Director of Development Services

DRAFT

INDEX

PAGE	*CONTENTS*
6-6.c	Staff Report dated September 24, 2024
5-5.b	Village Engineer Comments dated September 27, 2024
4	Certificate of Publication dated September 13, 2024
3.3.a	Resident Letter dated September 12, 2024
	Board of Trustees Meeting Minutes dated September 24, 2024 (Not Attached)
2	Referral Memo – Board of Trustees Agenda dated September 24, 2024
1	Zoning Regulations – Setback Regulations –13-7B-3.B.1.a

****

Application Materials

A	Petition Application
B-B.2	Letter of Explanation & Property Owner Approval
C-C.1	Variation Standards
D-D.1	Certification of Surrounding Property Owners and List
E	Subject Property Verification
F	Beneficial Interests
G	Fee Receipt
H	Exhibits – Site Plan, Elevations, Equipment Details, Etc.

VILLAGE OF OAK BROOK
Planning and Zoning Commission

STAFF REPORT

DATE: September 27, 2024

CASE NOS: 2024-14-ZO-VAR

DESCRIPTION: Variation – To allow EV charging equipment within the 300' setback from IL State Route 83.

PETITIONER: Rivian c/o SSC

ADDRESS: 100 Oakbrook Center

EXISTING ZONING: B-2, Regional Shopping Center District

ZONING/USE OF SURROUNDING PROPERTY:

North: B-2, Regional Shopping Center District

South: Same

East: Same

West: Rt 83, City of Oakbrook Terrace

DISCUSSION:
Rivian has submitted a petition seeking approval of a variation from the zoning regulations to permit and allow EV charging equipment within the 300' setback from Rt. 83.

In particular, the applicant is seeking variation to the following section of the setback Regulations:

- *Section: 13-7B-3(B)(1)(a)*
  B. Yards:
  1. No structure, other than signs as provided for in subsection 13-7B-4A of this article shall be erected or maintained within the following distances:
  a. Three hundred feet (300') from the right-of-way of 22nd Street or Route 83 (Kingery Expressway);

Rivian, an electric vehicle manufacturer has a lease agreement with Oakbrook Center for the installation of a Commercial Automobile Charging Facility, including nine (9) charging dispensers and (1) trailer stall. Rivian proposes to install equipment cabinets and a transformer in the parking lot within the 300' setback from Rt. 83. The equipment enclosure is shown at a setback of 45'1"

from the West property line. The charging dispenser closest to the property line will be setback approximately 56-feet.

Staff Comments:

1. The Village Zoning Ordinance update will include definitions of these types of facilities. The Village's regulations have not yet fully incorporated this technology into the Building, Fire, and Zoning Code. Staff has treated other EV facilities as ancillary equipment and permitted them in many locations within the Village. Similar services are offered on the Oakbrook Center property within the parking field and garages and throughout the Village (i.e. village hall, library, the Oaks of Oak Brook, and the Promenade).

2. The proposal would remove 5 parking spaces. Previous documents from the Oakbrook Center indicate a surplus of 368 parking spaces.

3. The landscaping island would be about 1,090 sq. ft. in area for the equipment enclosure.

4. The mechanical equipment is about 6'6", the enclosure will be 8'3" in height. Landscaping will be provided to visually softening the enclosure.

5. The enclosure materials are proposed to match the monument sign at the intersection of Route 83 and the Oakbrook Center Entrance.

6. There are two previously approved Planned Developments, Pinstripes and RH, which allowed buildings within the setbacks of the B-2 District.

7. The requested Variation is specific to these proposed improvements, future proposals will require a Planned Development or Variation to construct anything within the B-2 District's setback.

8. Parking lot improvements (i.e. ComEd, Blistex, etc.) have not generally been considered Planned Developments.

9. The applicant has provided images depicting the signage and illumination included on the dispensers.

10. The Village Engineer has reviewed the improvements and stated that the project appears to comply with the Stormwater regulations.

11. The applicant will meet all other applicable regulations.

Please see the materials provided by the petitioner in the case file for a more detailed description of this request.

RESPONSIBILITIES OF HEARING BODIES:
The Planning and Zoning Commission (P&Z) has the responsibility to make a recommendation on requests for variation. Please include in your consideration your findings with respect to the standards specified in the Zoning Ordinance for a variation. The materials submitted by the applicant specifically address these standards (see the case file). Those standards are:

"Section 13-14-6 D". Standards:

1. The Zoning Board of Appeals shall not recommend a variation of the provisions of this Title as authorized in this Section unless it shall have made findings of fact based upon the evidence presented to it on the following specific issues that:

a. The property in question cannot yield a reasonable return if permitted to be used only under the conditions allowed by the regulations governing the district in which it is located.

b. The plight of the owner is due to unique circumstances.

c. The variation, if granted, will not alter the essential character of the locality.

2. For the purpose of supplementing the above standards, the Zoning Board of Appeals, in making the determination whether there are practical difficulties or particular hardships, shall also take into consideration the extent to which the following facts, favorable to the applicant, have been established by the evidence that:

a. The particular physical surroundings, shape, or topographical conditions of the specific property involved would bring a particular hardship upon the owner as distinguished from a mere inconvenience if the strict letter of the regulation were to be carried out.

b. The condition upon which the petition for variation is based would not be applicable generally to the other property within the same zoning classification.

c. The granting of the variation will not be detrimental to the public welfare or injurious to other property or improvements in the neighborhood in which the property is located.

d. The proposed variation will not impair an adequate supply of light and air to adjacent property, or substantially increase the danger of fire, or otherwise endanger the public safety or substantially diminish or impair property values within the neighborhood.

e. That the purpose of the variation is not based exclusively upon a desire to make more money out of the property.

f. That the alleged difficulty or hardship has not been created by any person presently having an interest in the property."

CONCLUSION:
If the P&Z Commission is of the opinion that the applicant has satisfied the requirements for the requested variations to the B-2 District Regulations for the property located at 100 Oakbrook Center, a recommendation would be in order to approve the request subject to the following conditions:

1. The design and placement of the proposed EV charging dispensers, equipment cabinets, transformers, and landscaping shall be in substantial conformance with the plans as submitted and approved.
2. Add the condition "Notwithstanding the attached exhibits, the applicant shall meet all Village Ordinance requirements at the time of building permit application except as specifically varied or waived."

However, if you determine that the petitioner has not satisfied the required standards for a variation, the request should be denied.

Findings of fact, which are the basis of the P&Z determination, should be stated as part of either motion. The recommendation may state any conditions reasonably related to the petition, which the P&Z Commission deems necessary to protect the public interest.

Respectfully Submitted,

Rama Raman

Rama Raman
Village Planner

Rebecca Von Drasek
Development Services Director

Rebecca Von Drasek, MPA

From: James Patterson
Sent: Friday, September 27, 2024 8:50 AM
To: Rebecca Von Drasek, MPA
Subject: FW: Variation Application - Rivian EV Charging Stations - 100 Oak Brook Center

James Patterson, P.E., CFM
Consulting Engineer
Village of Oak Brook
1200 Oak Brook Rd
Phone: 630-368-5144
Email: jpatterson@oak-brook.org
Web: https://www.oak-brook.org/ds
Follow us:

This electronic message and any attached files contain information intended for the exclusive use of the individual(s) or entity to whom it is addressed and may contain information that is proprietary, confidential and/or exempt from disclosure under applicable law, including protected health information (PHI). If you are not the intended recipient or the employee or agent, you are hereby notified that any viewing, copying, disclosure or distribution of the information may be subject to legal restriction or sanction and is strictly prohibited. If you have received this communication in error, please notify the sender by return electronic message or telephone, and destroy the original message without making any copies. Unless otherwise stated, any opinions expressed in this electronic message are those of the author and are not endorsed by the Village.

Electronic messages sent to and from the Village of Oak Brook may be subject to discovery under the IL Freedom of Information Act.

Think Green! Please consider our environment before printing this electronic message.

From: James Patterson
Sent: Friday, August 23, 2024 9:01 AM
To: Rama Raman <rraman@oak-brook.org>
Subject: RE: Variation Application - Rivian EV Charging Stations - 100 Oak Brook Center

Hi Rama,

Per our conversation this morning, I am not concerned about the impervious area calculations for this variation. Oakbrook Center has a five figure (in SF) surplus of impervious area before PCBMPs would be required. We will update this number if/when the permit application is made.

Thank you,

James Patterson, P.E., CFM
Consulting Engineer
Village of Oak Brook
1200 Oak Brook Rd
Phone: 630-368-5144
Email: jpatterson@oak-brook.org
Web: https://www.oak-brook.org/ds
Follow us:

This electronic message and any attached files contain information intended for the exclusive use of the individual(s) or entity to whom it is addressed and may contain information that is proprietary, confidential and/or exempt from disclosure under applicable law, including protected health information (PHI). If you are not the intended recipient or the employee or agent, you are hereby notified that any viewing, copying, disclosure or distribution of the information may be subject to legal restriction or sanction and is strictly prohibited. If you have received this communication in error, please notify the

sender by return electronic message or telephone, and destroy the original message without making any copies. Unless otherwise stated, any opinions expressed in this electronic message are those of the author and are not endorsed by the Village.

Electronic messages sent to and from the Village of Oak Brook may be subject to discovery under the IL Freedom of Information Act.

Think Green! Please consider our environment before printing this electronic message.

From: Rama Raman <rraman@oak-brook.org>
Sent: Thursday, August 22, 2024 3:21 PM
To: James Patterson <jpatterson@oak-brook.org>
Subject: FW: Variation Application - Rivian EV Charging Stations - 100 Oak Brook Center

Hi Jamie,

Please review sheet 1 of 1 from the attached (Rivian_IL-00002-Oak Brook_CD100_Rev3_042324).

Thank you!

Sincerely,

Rama Raman

Rama Raman MURP
Village Planner
Village of Oak Brook
1200 Oak Brook Rd Oak Brook, IL 60523
Phone: 630-368-5120
Email: rraman@oak-brook.org
Web: http://www.oak-brook.org Follow us:

This electronic message and any attached files contain information intended for the exclusive use of the individual(s) or entity to whom it is addressed and may contain information that is proprietary, confidential and/or exempt from disclosure under applicable law, including protected health information (PHI). If you are not the intended recipient or the employee or agent, you are hereby notified that any viewing, copying, disclosure or distribution of the information may be subject to legal restriction or sanction and is strictly prohibited. If you have received this communication in error, please notify the sender by return electronic message or telephone, and destroy the original message without making any copies. Unless otherwise stated, any opinions expressed in this electronic message are those of the author and are not endorsed by the Village.

Electronic messages sent to and from the Village of Oak Brook may be subject to discovery under the IL Freedom of Information Act.

Think Green! Please consider our environment before printing this electronic message.

From: Emily Roseberry <ERoseberry@ssc.us.com>
Sent: Thursday, August 22, 2024 12:40 PM
To: Cathy Chiarelli <cchiarelli@oak-brook.org>; Rebecca Von Drasek, MPA <rvondrasek@oak-brook.org>
Cc: Rama Raman <rraman@oak-brook.org>
Subject: Variation Application - Rivian EV Charging Stations - 100 Oak Brook Center

CAUTION: This email message originated from outside of the Village's email system. Do not click links or open attachments unless you recognize the sender and know the content is safe.

Good Afternoon,

On behalf of Rivian, I would like to submit an application for Variation of the 300' setback from RT 83 for proposed Rivian EV charging station in the parking lot of Oakbrook Center shopping mall. Please find attached:

- Variation Application, includes:
  - Legal Description
  - Disclosure of Beneficial Interests form (N/A- property not in trust)
  - Surrounding Property Owner Certification
  - Response to the Standards
- Legal Description Word Doc
- Standing Statement (property owner authorization)
- Copy of current real estate tax bill
- Surrounding Property Owner List from York Township assessor's office
- Surrounding Property Owner mailing labels
- Construction Drawings, include:
  - Plat of Survey
  - Site Plans
  - Elevation Plans

Please let me know if you need anything else to accept and process this application for the October 2nd Planning & Zoning Commission meeting.

Thank you so much,

Emily Roseberry | SSC | Permitting Coordinator
7171 W. 95th Street, Suite 600
Overland Park, KS 66212
p 913.438.7700 ext. 2272
f 913.438.7777
c 913.645.5269
www.ssc.us.com

This message is a confidential and privileged communication and is intended for the recipient(s) only. Should you receive this message in error, please contact me immediately as indicated above and delete the message. Any other use of this message is prohibited.

NOTICE IS HEREBY GIVEN that a public hearing before the Planning & Zoning Commission of the Village of Oak Brook, DuPage and Cook Counties, Illinois, will be held on Wednesday, October 2, 2024 at 6:30 p.m. in the Samuel E. Dean Board Room of the Butler Government Center, Village of Oak Brook, 1200 Oak Brook Road (31st Street and Spring Road), Oak Brook, Illinois 60523 for the purpose of considering an application from SSC, Inc 7171 W. 95th Street #600, Overland KS 66212, acting as Agent for Rivian EV. The applicant is seeking a variation as provided for under Title 13 of the Zoning Ordinance of the Village of Oak Brook, Illinois, Ordinance G-60 as amended.

The applicant is seeking approval of a variation to allow the placement of equipment within the 300-foot setback from Route 83, at address 100 Oakbrook Center with the PIN as follows:

PARCEL NUMBER: 06-23-300-045

The petitioner's application including all supporting documents is on file with the Development Services Department. Persons wishing to examine the application documents may arrange to do so with the Development Services Department, Village of Oak Brook, 1200 Oak Brook Road, Oak Brook, IL 60523, telephone 630-368-5106.

In accord with the provisions of the American with Disabilities Act, any individual who is in need of a reasonable accommodation in order to participate in or benefit from attendance at this public meeting should contact the Butler Government Center (Village Hall), at 630-368-5010 as soon as possible before the meeting date.

Netasha Scarpiniti
Village Clerk

Published at the direction of the Corporate Authorities and the Planning & Zoning Commission of the Village of Oak Brook, DuPage and Cook Counties, Illinois

Published in Daily Herald September 13, 2024 (260336)

CERTIFICATE OF PUBLICATION

Paddock Publications, Inc.

Northwest Suburbs

Daily Herald

Corporation organized and existing under and by virtue of the laws of the State of Illinois, DOES HEREBY CERTIFY that it is the publisher of the **Northwest Suburbs DAILY HERALD**. That said **Northwest Suburbs DAILY HERALD** is a secular newspaper, published in Arlington Heights, Cook County, State of Illinois, and has been in general circulation daily throughout Cook County, continuously for more than 50 weeks prior to the first Publication of the attached notice, and a newspaper as defined by 715 ILCS 5/5.

I further certify that the **Northwest Suburbs DAILY HERALD** is a newspaper as defined in "an Act to revise the law in relation to notices" as amended in 1992 Illinois Compiled Statutes, Chapter 715, Act 5, Section 1 and 5. That a notice of which the annexed printed slip is a true copy, was published 09/13/2024 in said **Northwest Suburbs DAILY HERALD**. This notice was also placed on a statewide public notice website as required by 5 ILCS 5/2.1.

BY Paula Baltzer
Designee of the Publisher of the Daily Herald

Control # 260336

PADDOCK PUBLICATIONS, INC. Corporate SEAL ILLINOIS

VILLAGE OF
OAK BROOK
Illinois

BUTLER GOVERNMENT CENTER
1200 OAK BROOK ROAD
OAK BROOK, ILLINOIS 60523

September 12, 2024

Dear Resident:

The Oak Brook Planning & Zoning Commission and the Village Board will be considering a variation to the Zoning Regulations. All meetings scheduled are on the reverse side of this notice.

The application has been filed by:	Rivian EV
Agent:	SSC, Inc. 7171 W. 95th Street #600 Overland Park, KS 66212
The property is located at:	100 Oakbrook Center 22nd Street, Oak Brook

Also shown on the reverse side of this notice is a map** of the area to assist you in determining your relationship to the property in question.

The petitioner is seeking the approval of a variation to allow the placement of equipment within the 300-foot setback from Route 83.

If you desire more detailed information, please contact the Development Services Department at 630-368-5106 or 630-368-5103 between 8 AM-4 PM, Monday through Friday, except for holidays.

Sincerely,

Rebecca Von Drasek
Director, Development Services Department

In accord with the provisions of the Americans with Disabilities Act, any individual who is in need of a reasonable accommodation in order to participate in or benefit from attendance at a public meeting of the Village of Oak Brook should contact the Butler Government Center (Village Hall), at 630-368-5010 as soon as possible before the meeting date.

All meetings are held in the Butler Government Center of the Village of Oak Brook, located at 1200 Oak Brook Road (31st Street and Spring Road), Oak Brook, Illinois.

Planning & Zoning Commission*.....6:30 p.m., Wednesday, October 2, 2024

Board of Trustees Meeting..... 7:00 p.m., Tuesday, October 22, 2024***

*Public Hearing Body – Variation

***Tentative – Follows the completion of the Planning & Zoning Commission public hearing

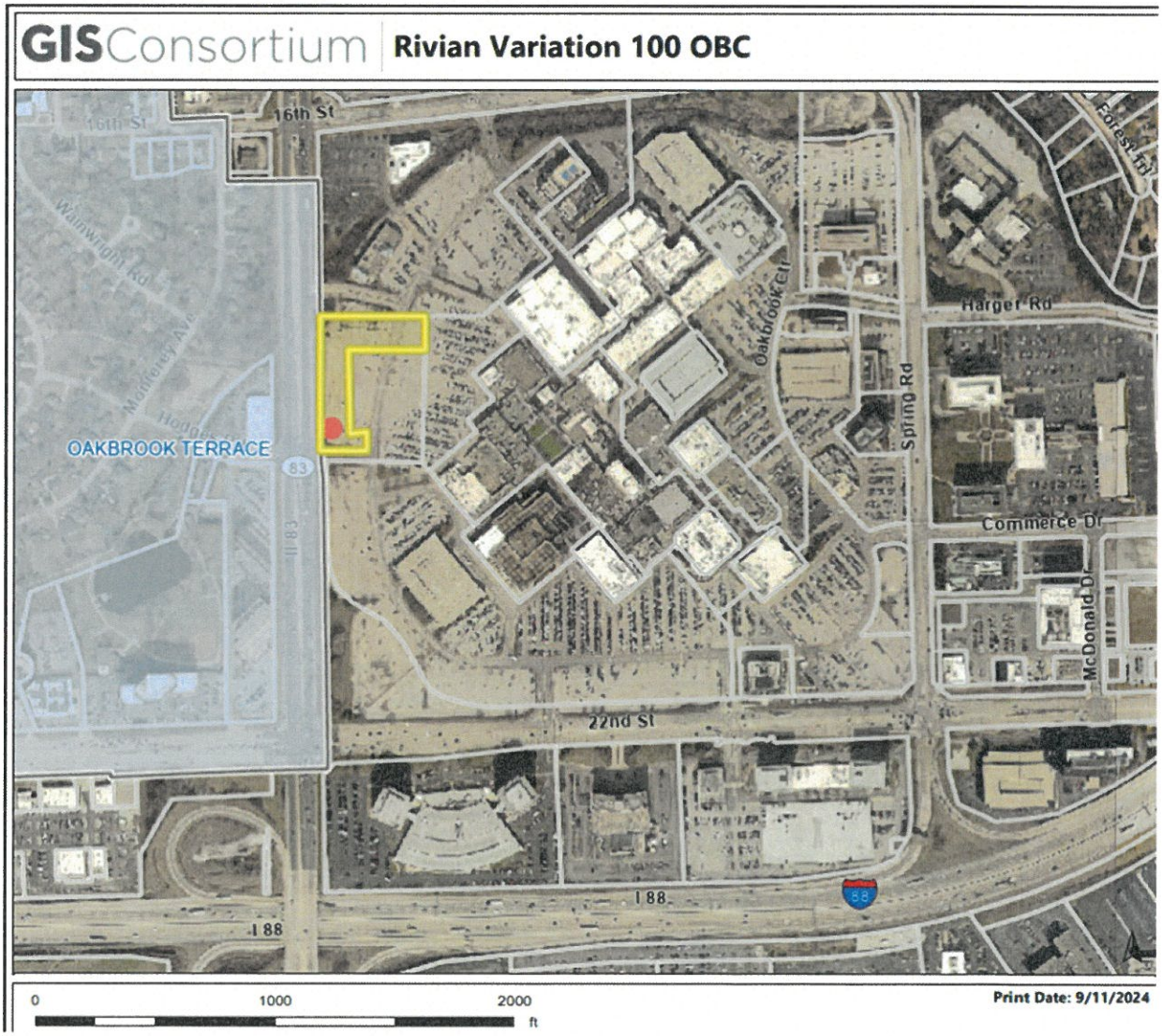

*Note: The map provided is only an approximation of the area in question and is intended to be used only as a visual aid to determine your relationship to the property.

100 OBC 22nd Rivian EV -VAR 2024.resLtr

ITEM 5.D.2.
BOARD OF TRUSTEES MEETING
SAMUEL E. DEAN BOARD ROOM
BUTLER GOVERNMENT CENTER
1200 OAK BROOK ROAD
OAK BROOK, ILLINOIS
630-368-5000

AGENDA ITEM

Board of Trustees Regular Meeting
of
September 24, 2024

SUBJECT: Rivian EV – 100 Oakbrook Center – Setback Variation

FROM: Rebecca Von Drasek, Development Services Director

BUDGET SOURCE/BUDGET IMPACT: N/A

RECOMMENDED MOTION: I move to refer the request for the zoning variation to the Planning & Zoning Commission for public hearing and recommendation.

Background/History:
Rivian, represented by Selective Site Consultants, Inc. has submitted a petition requesting approval of a zoning variation to allow the placement of equipment within the 300-foot setback from Route 83. The property is zoned B-2 District.

The petitioner is requesting approval of a variation to Section 13-7B-3B.1.a of the Zoning Ordinance to allow the placement of equipment within 300-feet from the right-of-way of Route 83 (Kingery Expressway).

Recommendation:
Staff recommends that the Village Board refer the Rivian EV request for a Variation to the Planning & Zoning Commission (P&Z) for a public hearing, review, and a recommendation.

Attachments:
1. REF-BOT_9.24.24

13-7B-3: LOT AREA REQUIREMENTS:

B. Yards:

1. No structure, other than signs as provided for in subsection 13-7B-4A of this article shall be erected or maintained within the following distances:

a. Three hundred feet (300') from the right-of-way of 22nd Street or Route 83 (Kingery Expressway);

Docusign Envelope ID: FEA8D6AA-FC50-43ED-BC14-FFE72B3ECC7F

VILLAGE OF OAK BROOK
1200 OAK BROOK ROAD
OAK BROOK, IL 60523
630-368-5106

PETITION APPLICATION for PUBLIC HEARING

ZONING ORDINANCE: ☐ APPEAL ($300) ☒ VARIATION ($750)
☐ AMENDMENT ($750) ☐ SPECIAL USE ($750)

☐ CERTIFICATE OF APPROPRIATENESS ($500) STORMWATER: ☐ VARIATION ($750)

PUBLIC HEARING SIGNS ($50- each lot frontage) 1 - Enter Number of Street Frontages/Per Parcel

APPLICANT TO COMPLETE

NOTE: ALL APPLICATIONS ARE TO BE RECEIVED BY THE DIRECTOR OF DEVELOPMENT SERVICES AND AFTER AN INITIAL REVIEW WILL BE FILED WITH THE VILLAGE CLERK.

LOCATION OF SUBJECT PROPERTY 100 Oak Brook Center PERMANENT PARCEL NO*. 06 - 23 - 300 - 045

LOT NO. 4 SUBDIVISION OAK BROOK TERRACE LEGAL ADDRESS*

ZONING DISTRICT B-2 ZONING ORDINANCE SECTION _ ACTION REQUESTED 13-7B-3(B)(1)(a)

Request for Variation of 300' setback from RT 83.

PROPERTY INTEREST OF APPLICANT: OWNER ☐ CONTRACT PURCHASER ☐ AGENT ☒

OWNER(S) OF RECORD OAK BROOK SHOPPING CENTER PHONE

ADDRESS PO Box 3487 CITY Chicago STATE IL ZIP 60654

BENEFICIARY(IES) OF TRUST N/A - Property not in trust. PHONE

ADDRESS CITY STATE ZIP

NAME OF APPLICANT (and Billing Information) Rivian c/o SSC PHONE 913-438-7700 x2272

ADDRESS 7171 W 95th Street, Suite 600 CITY Overland Park STATE KS ZIP 66212

Contact Name and E-mail Address(s) Emily Roseberry / eroseberry@ssc.us.com

I (we) certify that all of the above statements and the statements contained in any papers or plans submitted herewith are true to the best of my (our) knowledge and belief. I (we) give permission to the Village to install public hearing sign(s) on the lot frontages of the above subject property as described in the Village Code. In addition to the above fees, applicant agrees to reimburse the Village for publication costs within 30 days of billing.

Ken Labarre	7/24/2024	Signed by: Matt Wick 7061BD34A1D94E1...	8/19/2024
Signature of Owner	Date	Signature of Applicant	Date

DO NOT WRITE IN THE SPACE BELOW – FOR OFFICE USE ONLY

Date Filed 8/23/24 Fee Paid $ 800 Receipt No. 750142 Received By CC

Board of Trustees (Referral) 9/24/24 Notice Published 9/13/24 Newspaper Daily Herald Adj. Property Owners Notified 9/12/24

PUBLIC HEARING DATES: Planning & Zoning Commission 10/2/24

Board of Trustees 10/22/24 Board of Trustees (Approval of Ordinance) N/A

SIGNED - VILLAGE CLERK Natasha Sarpini Date 9/12/24

August 30, 2024

Village of Oak Brook
Planning & Zoning
1200 Oak Brook Rd.
Oak Brook, IL 60523

RE: Application for Variation for Rivian EV Charging Station
Address: 100 Oak Brook Center

To Whom It May Concern:

Please accept this as Letter of Explanation to accompany the application for Variation submitted to allow proposed Rivian EV Charging Station in the parking lot of Oakbrook Shopping Center. The variation is being requested to allow the EV charging equipment within the 300' setback from RT 83, per Oak Brook Zoning Ordinance section 13-7B-3(B)(1)(a).

Rivian is an electric vehicle manufacturer and automotive technology and outdoor recreation company. As part of their Adventure Network, they are developing and installing EV Charging Stations nationwide to support their product and others. This property is owned by Oak Brook Shopping Center, and Rivian currently has a fully executed lease agreement in place with the property owner for the installation of the EV charging station.

This proposed EV charging station at Oakbrook Shopping Center will consist of (9) EV charging dispensers, including (1) trailer stall. The associated equipment cabinets and transformer will be located on a curbed parking lot island, and all support equipment will be screened by a proposed CMU enclosure and landscaping. Proposed signage will not be illuminated.

The Rivian Adventure program equipment is complimentary to the current design aesthetic and will not impact the property negatively. The equipment enclosure for the Rivian mechanical equipment was carefully designed and selected by Rivian, Landlord, and Engineer of Record to match the monument sign in the ROW at the intersection of Kingery Highway & Oakbrook Center Entrance.

The relief is being requested to allow the placement of this equipment within the 300' setback from RT 83. The owner requested this location due to the mall traffic and parking availability. This location will also allow the owner to develop the parcel on future redevelopments. This EV charging installation will provide better customer support to the retail component of the mall.

B

7171 WEST 95TH STREET, SUITE 600
OVERLAND PARK, KANSAS 66212

p 913.438.7700
f 913.438.7777
ssc.us.com

Rivian and the property owner are ready for this EV installation to be approved by the City of Oak Brook to bring another level of accommodations to its current and future customer base.

Please contact me if you have any questions or concerns.

Thank you,

Emily Roseberry
Permitting Coordinator
SSC, Inc.
7171 W. 95th Street, Suite 600
Overland Park, KS 66212
O: 913-438-7700 ext. 2272
eroseberry@ssc.us.com

Brookfield
Properties

Via Email

August 12, 2024

Project: Rivian & SSC
SPACE: Rivian Green lot at 100 OBC

To Whom It May Concern,

Rivian & SSC Is authorized to submit for variance application on the above project on Oakbrook Center's behalf.

Sincerely,

Jaime Crosby
Senior Operations Manager
Retail

100 Oakbrook Center, Oak Brook, IL 60523
T 630 686 3423
Jaime Crosby@bpretail.com
www.brookfieldproperties.com/retail

Enclosures

cc: Operations Manager
Tenant file

VARIATION STANDARDS

1. a. The property in question cannot yield a reasonable return if permitted to be used only under the conditions allowed by the regulations governing the district in which it is located.

RESPONSE: *This project is not based on the requirement for profit; however, it is an EV charging installation for the sole purpose of electrifying vehicles and will provide better customer support to the retail component of the mall.*

1. b. The plight of the owner is due to unique circumstances.

RESPONSE: *The owner requested this location as due to the mall traffic and parking availability. This location will also allow the owner to develop the parcel on future redevelopments.*

1. c. The variation, if granted, will not alter the essential character of the locality.

RESPONSE: *The Rivian Adventure program equipment is complimentary to the current design aesthetic and will not impact the property negatively. The equipment enclosure for the Rivian mechanical equipment was carefully design and selected by Rivian, Landlord, and Engineer of Record to match the monument sign in the ROW at the intersection of Kingery Highway & Oakbrook Center Entrance.*

2. a. The particular physical surroundings, shape, or topographical conditions of the specific property involved would bring a particular hardship upon the owner as distinguished from a mere inconvenience if the strict letter of the regulation were to be carried out.

RESPONSE: *While no physical conditions for this parcel limit the installation location, the current land use of the parcel would be affected for future and current parking needs near the Oakbrook Mall Facility.*

2. b. The condition upon which the petition for variation is based would not be applicable generally to the other property within the same zoning classification.

RESPONSE: *Given the outer parcel boundary of the Oakbrook Center Mall along the ROW of Kingery Highway & West 22nd Street is currently zoned as the same classification. While this EV infrastructure is placed within the setback restriction, it does not impede overall parcel use, similar to the businesses of Pinstripes and RH Rooftop Restaurant of Oak Brook.*

2. c. The granting of the variation will not be detrimental to the public welfare or injurious to other property or improvements in the neighborhood in which the property is located.

RESPONSE: *The EV installation that is being requested will not have detrimental impact to the public welfare or be injurious to the other property/improvements of the neighborhood, similar to the Tesla Supercharger installation to the northwest of the proposed Rivian Chargers.*

2. d. The proposed variation will not impair an adequate supply of light and air to adjacent property, or substantially increase the danger of fire, or otherwise endanger the public safety or substantially diminish or impair property values within the neighborhood.

RESPONSE: *The EV installation that is being requested will not impair the parcel and neighborhood per items outlined in 7 2.d. as the installation follows strict federal guidelines for UL listings and follows all applicable local utility company requirements for install.*

2. e. That the purpose of the variation is not based exclusively upon a desire to make more money out of the property.

RESPONSE: *This project is not based on the requirement for profit; however, it is an EV charging installation for the sole purpose of electrifying vehicles and will provide better customer support to the retail component of the mall.*

2. f. That the alleged difficulty or hardship has not been created by any person presently having an interest in the property.

RESPONSE *Currently the Landlord has a signed executed lease with Rivian and is ready for this EV installation to be approved by the City of Oak Brook to bring another level of accommodations to its current and future customer base.*

NAMES OF SURROUNDING PROPERTY OWNERS

Following are the names and addresses of all surrounding property owners from the property in question for a distance of approximately 250 feet in all directions. The number of feet occupied by all public roads, streets, alleys, and public ways have been **excluded** in computing the 250-foot requirement. Said names are as recorded in the office of the County Recorder of Deeds (or the Registrar of Titles of the County) and as they appear from the authentic tax records of this County within 30 days of the filing of this application. **Provide a mailing label for each Property Owner listed** and applicant.

Note: The people on this list will be notified by mail with the information about your request and the meeting schedule.

NAME OF PROPERTY OWNER	MAILING ADDRESS OF PROPERTY OWNER	PROPERTY ADDRESS	PARCEL NUMBER
OAK BROOK SHOPPING CENTER	PO BOX 101042, CHICAGO, IL 60610-9909	RT 83	0623300045
RYAN LLC	PO BOX 06019, CHICAGO, IL 60606-0019	1 & 2 MID AMERICA PLAZ	0622415027
OAKBROOK ANCHOR ACQUISITION	PO BOX 101042, CHICAGO, IL 60610-9909	2 OAKBROOK CENTER	0623300022
TRIARC DEVELOPMENT LLC	564 S CHARLOTTE ST, LOMBARD, IL 60148	1S515 MONTEREY AVE	0622409011
WESTBROOK PLAZA LLC	6431 TENNESSEE AVE, WILLOWBROOK, IL 60527-1858	1S550 RT 83	0622412003
MICHAEL & MARGARET ZUPSICH	5062 OUACHITA DR, LAKE WORTH, FL 33467	1S471 MONTEREY AVE	0622409008
OAKBROOK ANCHOR ACQUISITION	PO BOX 101042, CHICAGO, IL 60610-9909	2 OAKBROOK CENTER	0623300024
MACYS	145 PROGRESS PL, SPRINGDALE, OH 45246	1 OAKBROOK CNTR	0623300029
RONALD & NANCY ALLGAIER	1S509 MONTEREY AVE, OAKBROOK TERR, IL 60181	1S509 MONTEREY AVE	0622409010
MACYS	145 PROGRESS PL, SPRINGDALE, OH 45246	1 OAKBROOK CNTR	0623300046
OAK BROOK SHOPPING CENTER	PO BOX 101042, CHICAGO, IL 60610-9909	120 OAKBROOK CTR	0623300044
RODNEY & INGRID DURHAM	1S501 MONTEREY AVE, OAKBROOK TERR, IL 60181-4517	1S501 MONTEREY AVE	0622409009

(Attach additional sheets if necessary)

Certification
Surrounding Property Owners

I (we) certify that the names and addresses of all the surrounding property owners including mailing labels submitted with this application are located within a minimum distance of 250 feet in all directions from the perimeter of the subject property and that the number of feet occupied by all public roads, streets, alleys, and public ways has been excluded in computing the 250-foot requirement.

Said names and addresses are as recorded in the office of the County Recorder of Deeds (or the Registrar of Titles of the County) and as appear from the authentic tax records of this County. The property owners as listed have been obtained from within 30 days of the filing of this application.

The surrounding property owners list as submitted herewith and supporting attachments are true to the best of my (our) knowledge and belief.

I (we) give permission to the Village to install public hearing sign(s) on the lot frontages of the subject property as described in the Village Code. In addition to the required application fees, applicant/owner agrees to reimburse the Village for publication costs, recording fees, and any other associated costs or fees within 30 days of billing.

Kenneth A Labarre		Matt Wick	
Printed Name of Owner		Printed Name of Applicant	
Ken Labarre	7/24/2024	Signed by: Matt Wick 7061BD34A1084E1...	8/19/2024
Signature of Owner	Date	Signature of Applicant	Date

BILL TO INFORMATION:

Selective Site Consultants, Inc.	Emily Roseberry	
Print Name/Company	Contact Person	Contact Phone
7171 W 95th Street, Suite 600, Overland Park, KS 66212		913-438-7700 x2272
Address To be Billed		Alternate Phone
		913-645-5269

NOTE: If the applicant/owner has not complied with these requirements and notification has not been sent to a neighboring property owner within the 250-foot requirement less than 10 days prior to the scheduled hearing, the hearing on this matter will be postponed to the next regular meeting, or until such time as all neighbors within the 250-foot requirement have been sent proper notification.

Subject Property Verification

(Complete a separate form for each P.I.N.)

1. Permanent Index Number (P.I.N. from Real Estate Tax Bill): 06 23 300 045
2. Common Address: 100 Oak Brook Center
3. Type the Complete Legal Description Below. (Attach a separate page if longer than the area provided)
4. Email the Legal Description to cchiarelli@oak-brook.org

THAT PART OF LOT 4 IN OAKBROOK TERRACE, A SUBDIVISION OF PART OF SECTION 23, TOWNSHIP 39 NORTH, RANGE 11, EAST OF THE THIRD PRINCIPAL MERIDIAN ACCORDING TO THE PLAT THEREOF RECORDED OCTOBER 24, 1960 AS DOCUMENT 984765, DESCRIBED AS FOLLOWS:

COMMENCING AT THE SOUTHWEST CORNER OF SAID LOT 4, THENCE NORTH 1 DEGREES 05 MINUTES 37 SECONDS EAST, ALONG THE WEST LINE OF SAID LOT 4, A DISTANCE OF 40.00 FEET OF THE POINT OF BEGINNING; THENCE CONTINUING NORTH 1 DEGREE 05 MINUTES 37 SECONDS EAST, ALONG SAID WEST LINE, 575.00 FEET TO THE NORTHWEST CORNER OF SAID LOT 4; THENCE ALONG SOUTH 88 DEGREES, 54 MINUTES 23 SECONDS EAST, ALONG THE NORTH LINE OF SAID LOT 4, A DISTANCE OF 423.32 FEET; THENCE SOUTH 1 DEGREE 05 MINUTES 37 SECONDS WEST 145.00 FEET; THENCE NORTH 88 DEGREES 54 MINUTES, 23 SECONDS WEST 303.32 FEET; THENCE SOUTH 1 DEGREE 05 MINUTES 37 SECONDS WEST 354.70 FEET; THENCE SOUTH 88 DEGREES, 54 MINUTES, 23 SECONDS EAST 70.00 FEET; THENCE SOUTH 1 DEGREE 05 MINUTES 37 SECONDS WEST 75.30 FEET; THENCE NORTH 88 DEGREES, 54 MINUTES, 23 SECONDS WEST 190.00 FEET TO THE POINT OF BEGINNING, IN DUPAGE COUNTY, ILLINOIS.

The Permanent Index Number, Common Address and Legal information provided has been verified as follows:

DuPage County Records/Research Room: (630-407-5401) Contact Person: Date called: _____

I verify that the information provided above is accurate.

Emily Roseberry, SSC as agent for Rivian

Printed Name **Signature**

Date: 5/22/2024 **Relationship to Applicant:** Permitting Agent to Rivian

DO NOT WRITE IN THIS SPACE – FOR OFFICE USE ONLY

L gal Description Review

Corrections Required Yes _____ No _____

Approved By: _____ Date _____

E

COMPLIANCE WITH
"AN ACT TO REQUIRE DISCLOSURE OF ALL BENEFICIAL INTERESTS"

765 ILCS 405/1, ET AL (1993)

NAME OF TRUSTEE: Property not in trust - not applicable

PPN #:_____

PROPERTY ADDRESS:_____

NAME & ADDRESS OF BENEFICIARIES:

1._____

2._____

3._____

The above and foregoing is a complete disclosure of all beneficiaries and/or holders of any beneficial interest in the above named trust.

STATE OF ILLINOIS)
) SS
COUNTY OF DUPAGE)

_____**Being first sworn on oath deposes and states that he/she has read the above and foregoing disclosure of beneficiaries of a land trust by him/her subscribed, knows the contents thereof and that the same are true and correct.**

_____
Signature

Subscribed and sworn to before me this_____**day**

of_____**, 20**_____**.** **(SEAL)**

_____
Notary Public

F

Please Deposit Check in: Zoning Account 10-4302

For:

OBC Rivian Variation

NOTE: 1 check(s) – Total ***$ 800***

Variation Application ***$750***
Public Hearing Signs (1) ***$50***

VILLAGE OF OAK BROOK
1200 OAK BROOK ROAD
OAK BROOK, IL 60523

MISCELLANEOUS PAYMENT RECPT#: 750142
DATE: 09/11/24 TIME: 11:10:42
CLERK: jwozniak DEPT:
CUSTOMER#:

COMMENT: OBC RIVIAN VARIATION

REVENUE:
1 10 43020 800.00
ZONING/SUBDIV APPLICATION
ZONING/SUBDIVISION
CASH:
99 1105 800.00
CASH -PLD

AMOUNT PAID: 800.00

PAID BY: SELECTIVE SITE CONSU
PAYMENT METH: CHECK
34138

REFERENCE: SELECTIVE SI

AMT TENDERED: 800.00
AMT APPLIED: 800.00
CHANGE: .00

G

Docusign Envelope ID: 54931469-A40F-46BD-84C4-27E801AD8D1A

RIVIAN

APPLICANT SITE NAME:
OAK BROOK

SSC SITE NUMBER:
IL-00002

PROJECT:
RIVIAN ADVENTURE NETWORK

DRAWING DESCRIPTION:
FINAL CD100

AERIAL MAP

SITE INFORMATION

SITE LOCATION:
LATITUDE: 41.850216° N (NAD 83)
LONGITUDE: 87.9567090° W (NAD 83)
GROUND ELEV: 678' AMSL

SITE ADDRESS: 100 OAK BROOK CENTER, SUITE EV, OAK BROOK, IL 60523

COUNTY: DUPAGE

JURISDICTION: VILLAGE OF OAK BROOK, IL
CONTACT: TBD
EMAIL: TBD
PHONE: TBD

ASSIGNED PARCEL #: 06-23-300-045

APPLICANT: RIVIAN

RIVIAN REAL ESTATE MANAGER:
CONTACT: BRADLEY SOME
EMAIL: bsome@rivian.com
PHONE: (973) 668-9507

RIVIAN DEPLOYMENT MANAGER:
CONTACT: MATT LANG
EMAIL: mlang@rivian.com
PHONE: (937) 238-8813

PROPERTY OWNER: BROOKEFIELD PROPERTIES
CONTACT: TBD
EMAIL: TBD
PHONE: TBD

UTILITY COMPANY: COMED ELECTRIC
CONTACT: JOE HUSS
EMAIL: joseph.huss@comed.com
PHONE: (630) 424-5211

DRAWING INDEX

SHEET NO.	SHEET DESCRIPTION
T-1.0	TITLE SHEET
	SURVEY (BY OTHERS)
C-1.0	OVERALL SITE PLAN
C-1.1	EXISTING SITE PLAN
C-1.2	ENLARGED SITE PLAN
C-1.3	SITE ELEVATIONS
C-2.0	EQUIPMENT PLANS (1 OF 2)
C-2.1	EQUIPMENT PLANS (2 OF 2)
C-3.0	EQUIPMENT DETAILS (1 OF 4)
C-3.1	EQUIPMENT DETAILS (2 OF 4)
C-3.2	EQUIPMENT DETAILS (3 OF 4)
C-3.3	EQUIPMENT DETAILS (4 OF 4)
C-4.0	FOUNDATION/WALL PLAN
C-4.1	BLOCK WALL DETAILS (1 OF 2)
C-4.2	BLOCK WALL DETAILS (2 OF 2)
L-1.0	LANDSCAPE PLAN (1 OF 2) (BY OTHERS)
L-2.0	LANDSCAPE PLAN (2 OF 2) (BY OTHERS)
E-1.0	UTILITY PLAN
E-1.1	RIVIAN UTILITY PLAN
E-2.0	RIVIAN RISER DIAGRAM
E-2.1	ELECTRICAL ONE-LINE DIAGRAM
E-2.2	PANEL SCHEDULE
E-3.0	ELECTRICAL DETAILS (1 OF 2)
E-3.1	ELECTRICAL DETAILS (2 OF 2)
G-1.0	GROUNDING RISER DIAGRAM
G-2.0	GROUNDING DETAILS
SP-1.0	SPECIFICATIONS (1 OF 5)
SP-1.1	SPECIFICATIONS (2 OF 5)
SP-1.2	SPECIFICATIONS (3 OF 5)
SP-2.0	SPECIFICATIONS (4 OF 5)
SP-2.1	SPECIFICATIONS (5 OF 5)
	RIVIAN HARDWARE DATASHEET (BY OTHERS)
	SWITCH BOARD SHOP DRAWINGS (BY OTHERS)
	PERFECT VISION GATE DRAWINGS (BY OTHERS)

SITE LOCATION QR CODE

CONSULTING TEAM

ENGINEERING:
SSC, INC.
7171 WEST 95TH STREET, SUITE 600
OVERLAND PARK, KANSAS 66212
PHONE: (913) 438-7700
FAX: (913) 438-7777

CLIENT MANAGER:
D.C. PELLAND

A&E PROJECT MANAGER:
A.M. WHYTE

LEAD ENGINEER:
R.E. JENSEN

LEAD ELECTRICAL:
S.D. KEISLING

JURISDICTION COMPLIANCE

ALL WORK SHALL BE PERFORMED AND MATERIALS INSTALLED IN ACCORDANCE WITH THE CURRENT EDITIONS OF THE FOLLOWING CODES AS ADOPTED BY THE LOCAL GOVERNING AUTHORITIES. NOTHING IN THESE PLANS IS TO BE CONSTRUED TO PERMIT WORK NOT CONFORMING TO THESE CODES.

1. 2021 INTERNATIONAL BUILDING CODE
2. 2021 INTERNATIONAL MECHANICAL CODE
3. ANSI/TIA-222 STRUCTURAL STANDARD
4. NFPA 780 – LIGHTNING PROTECTION CODE
5. 2020 NATIONAL ELECTRICAL CODE

811 Know what's below. Call before you dig. www.call811.com

THE UTILITIES AS SHOWN ON THIS SET OF DRAWINGS WERE DEVELOPED FROM THE INFORMATION AVAILABLE. THE INFORMATION PROVIDED IS NOT IMPLIED NOR INTENDED TO BE THE COMPLETE INVENTORY OF UTILITIES IN THIS AREA. IT IS THE CONTRACTOR'S RESPONSIBILITY TO VERIFY THE LOCATION OF ALL UTILITIES (WHETHER SHOWN OR NOT) AND PROTECT SAID UTILITIES FROM ANY DAMAGE CAUSED BY CONTRACTOR'S ACTIVITIES.

PROJECT DESCRIPTION

INSTALL (9) RIVIAN DCFC DISPENSERS WITH SIGNAGE

INSTALL SWITCHBOARD WITH FOUNDATION

INSTALL (3) POWER CABINETS WITH FOUNDATION

INSTALL (1) TRANSFORMER FOUNDATION PAD (TRANSFORMER FURNISHED BY UTILITY COMPANY)

STAMP:
8/30/2024
LICENSED PROFESSIONAL ENGINEER
SHELTON D. KEISLING
062.069129
OF ILLINOIS
Docusigned by: Shelton Keisling
EF94D8A5B80B407...

ENGINEERING LICENSE:
STATE OF ILLINOIS
PE CERTIFICATE OF AUTHORIZATION # 184.003404

ENGINEER:		PE#:	DISCIPLINE:
SDK	SHELTON D. KEISLING	062-069129	ELECTRICAL
TMS	TERRANCE M. SUPER	062-052514	ELECTRICAL

PLANS PREPARED FOR:
RIVIAN

PLANS PREPARED BY:
SSC

DRAWING NOTICE:
THIS DRAWING HAS NOT BEEN PUBLISHED AND IS THE SOLE PROPERTY OF SSC, INC. AND IS LENT TO THE BORROWER FOR THEIR CONFIDENTIAL USE ONLY, AND IN CONSIDERATION OF THE LOAN OF THIS DRAWING, THE BORROWER PROMISES AND AGREES TO RETURN IT UPON REQUEST AND AGREES THAT IT WILL NOT BE REPRODUCED, COPIED, LENT OR OTHERWISE DISPOSED OF DIRECTLY OR INDIRECTLY, NOR USED FOR ANY PURPOSE OTHER THAN FOR WHICH IT IS FURNISHED.

SUBMITTALS:

DESCRIPTION	DATE	BY	REV
ISSUED FOR CONSTRUCTION	03/30/23	DWO	0
TRAILER STALL REVISED	04/11/23	TX	1
REVISED PER CLIENT COMMENTS	12/20/23	IBA	2
REVISED PER CLIENT COMMENTS	04/23/24	IBA	3
REVISED PER AHJ COMMENTS	08/30/24	IBA	4

APPLICANT SITE NAME:
OAK BROOK

SSC SITE NUMBER:
IL-00002

SITE ADDRESS:
100 OAK BROOK CENTER, STE. EV
OAK BROOK, IL 60523

SHEET DESCRIPTION: TITLE SHEET

SHEET #: T-1.0

Docusign Envelope ID: 54931469-A40F-46BD-84C4-27E801AD8D1A

CDS COMMERCIAL DUE DILIGENCE SERVICES

SURVEY DRAWING

TITLE DESCRIPTION

LEGAL DESCRIPTION:

THAT PART OF LOT 4 IN OAKBROOK TERRACE, A SUBDIVISION OF PART OF SECTION 23, TOWNSHIP 39 NORTH, RANGE 11, EAST OF THE THIRD PRINCIPAL MERIDIAN ACCORDING TO THE PLAT THEREOF RECORDED OCTOBER 24, 1960 AS DOCUMENT 964765, DESCRIBED AS FOLLOWS:

COMMENCING AT THE SOUTHWEST CORNER OF SAID LOT 4, THENCE NORTH 1 DEGREES 05 MINUTES 37 SECONDS EAST, ALONG THE WEST LINE OF SAID LOT 4, A DISTANCE OF 40.00 FEET OF THE POINT OF BEGINNING; THENCE CONTINUING NORTH 1 DEGREE 05 MINUTES 37 SECONDS EAST, ALONG SAID WEST LINE, 575.00 FEET TO THE NORTHWEST CORNER OF SAID LOT 4; THENCE ALONG SOUTH 88 DEGREES, 54 MINUTES 23 SECONDS EAST, ALONG THE NORTH LINE OF SAID LOT 4, A DISTANCE OF 423.32 FEET; THENCE SOUTH 1 DEGREE 05 MINUTES 37 SECONDS WEST 145.00 FEET; THENCE NORTH 88 DEGREES 54 MINUTES, 23 SECONDS WEST 303.32 FEET; THENCE SOUTH 1 DEGREE 05 MINUTES 37 SECONDS WEST 354.70 FEET; THENCE SOUTH 88 DEGREES, 54 MINUTES, 23 SECONDS EAST 70.00 FEET; THENCE SOUTH 1 DEGREE 05 MINUTES 37 SECONDS WEST 75.30 FEET; THENCE NORTH 88 DEGREES, 54 MINUTES, 23 SECONDS WEST 190.00 FEET TO THE POINT OF BEGINING, IN DUPAGE COUNTY, ILLINOIS.

THIS SURVEY AND LEGAL DESCRIPTION ARE NOT THE SAME AS THAT DESCRIBED IN FIRST AMERICAN TITLE INSURANCE COMPANY COMMITMENT NUMBER: 1067559, DATED: MAY 24, 2021

NORTH ARROW / SCALE

NORTH

0' 10' 20' 40'

SCALE: 1" = 20'

SCHEDULE "B" ITEMS

NOTES CORRESPONDING TO SCHEDULE "B" SECTION TWO EXCEPTIONS:

1. GRANT OF EASEMENT TO NORTHERN ILLINOIS GAS COMPANY, DOING BUSINESS AS NICOR GAS RECORDED SEPTEMBER 30, 1999 AS **DOCUMENT R1999-207920.**
   (AFFECTS SURVEY AREA, UNABLE TO PLOT, PRECISE DESCRIPTION NOT PROVIDED)
2. GRANT OF EASEMENT TO NORTHERN ILLINOIS GAS COMPANY, DOING BUSINESS AS NICOR GAS RECORDED SEPTEMBER 30, 1999 AS **DOCUMENT R1999-207921.**
   (AFFECTS SURVEY AREA, UNABLE TO PLOT, PRECISE DESCRIPTION NOT PROVIDED)
3. RECIPROCAL EASEMENT AGREEMENT BETWEEN OAKBROOK SHOPPING CENTER, LLC AND OAKBROOK CENTER EAST, LLC RECORDED JULY 6, 2012 AS **DOCUMENT R2012-086775.**
   (AFFECTS, BLANKET IN NATURE, NOTHING PLOTTED)

VICINITY MAP

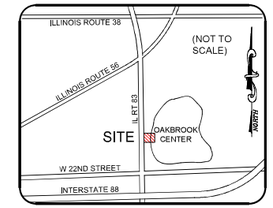

SURVEYOR NOTES

1. THIS IS A TOPOGRAPHIC MAP. THIS IS NOT A BOUNDARY SURVEY AND IS ONLY INTENDED TO DEPICT THOSE TOPOGRAPHIC FEATURES OR IMPROVEMENTS SHOWN. THE PROPERTY LINES SHOWN ARE RECORD LINES ONLY AND ARE SHOWN FOR GRAPHICAL REFERENCE ONLY.
2. THE UNDERGROUND UTILITIES SHOWN HEREON ARE BASED ON MARKINGS CREATED BY G.P.R.S. USING GROUND PENETRATING RADAR ON MAY 18, 2021, OBSERVED ABOVE GROUND FEATURES AND/OR EXISTING DRAWINGS. THE SURVEYOR MAKES NO GUARANTEE THAT THE UNDERGROUND UTILITIES SHOWN COMPRISE ALL SUCH UTILITIES IN THE AREA, EITHER IN SERVICE OR ABANDONED. THE SURVEYOR FURTHER DOES NOT WARRANT THAT THE UNDERGROUND UTILITIES SHOWN ARE IN THE EXACT LOCATION INDICATED ALTHOUGH HE DOES CERTIFY THAT THEY ARE LOCATED AS ACCURATELY AS POSSIBLE FROM THE INFORMATION AVAILABLE. THE SURVEYOR HAS NOT PHYSICALLY LOCATED THE UNDERGROUND UTILITIES. ALL UNDERGROUND UTILITIES SHOULD BE FIELD VERIFIED BY THE CONTRACTOR PRIOR TO COMMENCING ANY ONSITE WORK.
3. FEDERAL EMERGENCY MANAGEMENT AGENCY, FEMA FIRMETTE PUBLISHED APRIL 2021 REFERENCING FLOOD INSURANCE RATE MAP, MAP NUMBER 17043C 0177J EFFECTIVE DATE AUGUST 01, 2019, INDICATES THIS PARCEL IS LAND IS LOCATED IN ZONE "X" (AREAS DETERMINED TO BE OUTSIDE THE 0.2% ANNUAL CHANCE).
4. THIS SURVEY DOES NOT CONSTITUTE A TITLE SEARCH BY FA COMMERCIAL DUE DILIGENCE SERVICES TO DETERMINE OWNERSHIP OR EASEMENTS OF RECORD. FOR ALL INFORMATION REGARDING EASEMENTS, RIGHTS OF WAY AND TITLE OF RECORD, CDS RELIED UPON A SEARCH REPORT, PREPARED BY FIRST AMERICAN TITLE INSURANCE COMPANY, COMMITMENT NUMBER: 1067559, COMMITMENT DATE: MAY 24, 2021.
5. ELEVATIONS ARE BASED ON TRIMBLE VRS NOW (NAVD 88 DATUM).
6. SITE BENCHMARK: CUT BOX ON CURB. ELEVATION: 678.00'
7. BASIS OF BEARINGS: BEARINGS AND DISTANCES SHOWN ARE RELATIVE TO THOSE DESCRIBED IN QUIT CLAIM DEED RECORDED AS DOCUMENT NUMBER R2004-213981, OFFICIAL RECORDS OF DUPAGE COUNTY, ILLINOIS. UNLESS NOTED OTHERWISE.
8. FIELD WORK FOR THIS SURVEY WAS COMPLETED ON MAY 18, 2021.
9. THE OWNER NAMES AND TAX PARCEL DATA SHOWN HEREON ARE BASED UPON THE PUBLIC WORKS RECORDS AVAILABLE AT THE ORIGINAL DATE OF THIS SURVEY. CURRENT OWNERSHIP AND TAX PARCEL DATA SHOULD BE VERIFIED FOR ACCURACY.
10. PER THE ZONING INFORMATION REPORT PREPARED BY FA-CDS (888) 322 7371 - CDS_SOLUTIONS@FIRSTAM.COM; ORDER NO.: 21-04-0119, DATED: 04/13/2021; THIS SITE IS ZONED: B-2, REGIONAL SHOPPING CENTER WITHIN THE PLANNED DEVELOPMENT OVERLAY.

    REQUIREMENTS
    MINIMUM FRONT SETBACK: 300 FEET FROM R/W OF 22ND STREET OR ROUTE 83 (KINGERY EXPRESSWAY); 80 FEET FROM THE R/W OF ANY OTHER STREET; ADJACENT TO A B-1 OR RESIDENCE DISTRICT: 150 FEET MINIMUM
    MINIMUM SIDE SETBACK: 300 FEET FROM R/W OF 22ND STREET OR ROUTE 83 (KINGERY EXPRESSWAY); 80 FEET FROM THE R/W OF ANY OTHER STREET; ADJACENT TO A B-1 OR RESIDENCE DISTRICT: 150 FEET MINIMUM
    MINIMUM REAR SETBACK: 300 FEET FROM R/W OF 22ND STREET OR ROUTE 83 (KINGERY EXPRESSWAY); 80 FEET FROM THE R/W OF ANY OTHER STREET; ADJACENT TO A B-1 OR RESIDENCE DISTRICT: 150 FEET MINIMUM
    MAXIMUM HEIGHT: NO REQUIREMENT NOTED
    MINIMUM LOT WIDTH: NO REQUIREMENT NOTED
    MINIMUM LOT DEPTH: NO REQUIREMENT NOTED
    MAX. FLOOR AREA RATIO: 0.5
    MINIMUM PARKING: WITH A LOT AREA OF NOT MORE THAN 40 ACRES: PARKING SPACES AND AISLES NOT LESS IN AREA THAN 2 1/4 TIMES THE FLOOR AREA OF BUILDINGS CONSTRUCTED; WITH A LOT AREA OF 40 ACRES TO 60 ACRES: NOT LESS IN AREA THAN 1 7/8 TIMES THE GROSS FLOOR AREA OF BUILDINGS CONSTRUCTED; WITH A LOT AREA OF 60 ACRES OR MORE: NOT LESS IN AREA THAN 1 1/2 TIMES THE GROSS FLOOR AREA OF BUILDINGS CONSTRUCTED.
11. SURVEYOR WAS UNABLE TO OPEN MANHOLE LIDS AND GRATED INLETS TO DETERMINE INVERT ELEVATIONS AND PIPE SIZES.

LEGEND

- = GRATE INLET
- = SIGNAL LIGHT
- = SIGNAL BOX
- = SIGN
- G = GAS LINE MARKER
- ICV = IRRIGATION CONTROL VALVE
- = LIGHT POLE
- EVT = ELECTRIC VAULT
- TVT = TELEPHONE VAULT
- = STORM MANHOLE
- = TREE
- = SITE BENCHMARK
- = CONCRETE
- = NO PARKING AREA

(P) = PLAT CALL PER OAKBROOK SUBDIVISION DOCUMENT NO. R1960-964765
R/W = RIGHT-OF-WAY
L/S = LANDSCAPE AREA
TYP. = TYPICAL

ADJOINING PROPERTY	
PROPERTY LINE	PL
UNDERGROUND GAS	GAS
UNDERGROUND ELECTRIC	ELE
UNDERGROUND TELEPHONE	TEL
UNDERGROUND STORM	STM

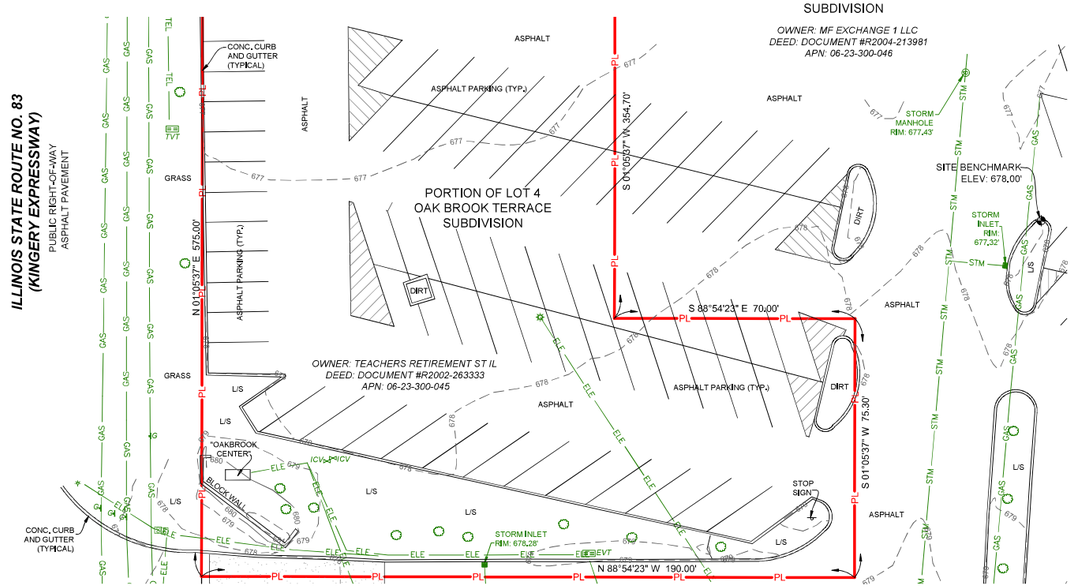

SURVEYOR CERTIFICATION

On the basis of my knowledge, information and belief, I hereby state and declare that this drawing was prepared under my direct supervision to the standard of care of surveyors practicing in the State of Illinois and that the information shown hereon is true and correct to the best of my knowledge and belief.

Date of Plat or Map: 05/27/2021

PROFESSIONAL LAND SURVEYOR DARYN M. BERNARD 035-003587 BETHALTO, ILLINOIS STATE OF ILLINOIS

Daryn Bernard, PLS.
Illinois Professional Land Surveyor 035-003587
Expires November 30, 2022
Illinois License No. 184.006196

Limited Topographic Survey

This Work Coordinated By:

CDS COMMERCIAL DUE DILIGENCE SERVICES
3550 W. Robinson Street, Third Floor
Norman, Oklahoma 73072
Main Office Phone No.: 405-253-2444

Toll Free: 888.457.7878

Drawn By: CZM	Date: – Revision: –
Surveyor Ref. No: 21-05-0223	Date: – Revision: –
Approved By: DMB	Date: – Revision: –
Field Date: 05/18/2021	Date: – Revision: –
Scale: 1" = 20'	

Prepared For:

PROJECT ADDRESS

1 Oakbrook Center
Oak Brook, Illinois 60521

Project Name:
RA Oakbrook Center-Oak Brook Resurvey

CDS Project Number:
21-05-0223

The surveying company: Commercial Due Diligence Services certifies to the accuracy and sufficiency of the survey provided hereon.

CDS COMMERCIAL DUE DILIGENCE SERVICES
3550 W. Robinson Street, Third Floor
Norman, Oklahoma 73072
Main Office Phone No.: 405-253-2444

Copyright ©Commercial Due Diligence Services. This format and style is protected by Copyright, all rights are reserved. Any use of this format and style is strictly prohibited without prior written permission from Commercial Due Diligence Services.

Sheet 1 of 1

Docusign Envelope ID: 54931469-A40F-46BD-84C4-27E801AD8D1A

LINETYPE LEGEND:

——— — — ———	EXISTING R.O.W.
OHP ——— OHP	EXISTING OVERHEAD POWER
P ——— P	EXISTING UNDERGROUND COMMERCIAL/RESIDENTIAL POWER
T ——— T	EXISTING UNDERGROUND TELCO/FIBER
GAS ——— GAS	EXISTING UNDERGROUND NATURAL GAS
W ——— W	EXISTING UNDERGROUND WATER LINE
SEWER ———	EXISTING UNDERGROUND SEWER LINE
SW ——— SW	EXISTING UNDERGROUND STORM WATER LINE

GENERAL NOTES:

1. THE CONTRACTOR SHALL ENSURE THAT EXISTING CURBING AND PAVEMENT IS NOT DAMAGED WHILE ACCESSING WORK AT THE SITE AND SHALL BE RESPONSIBLE TO REPLACE CURBING AND PAVEMENT IF DAMAGED.
2. THE CONTRACTOR SHALL REMOVE EXISTING PAVEMENT AND/OR CURB USING CLEAN SAW CUTS TO INSTALL PROPOSED UNDERGROUND CONDUITS AND REPLACE PAVEMENT AND/OR CURB AFTER CONDUITS HAVE BEEN INSTALLED. NEW PAVEMENT SHALL MEET OR EXCEED EXISTING PAVEMENT SPECIFICATIONS. NOTIFY ENGINEER OF ANY DISCREPANCIES PRIOR TO PERFORMING WORK.
3. APPLY LIQUID ASPHALT AT ALL JOINTS BETWEEN CONCRETE AND ASPHALT AND WHERE PROPOSED ASPHALT MEETS EXISTING, INCLUDING SAW CUT JOINTS.
4. PROPOSED ASPHALT PAVEMENT SHALL MATCH EXISTING IN TYPE AND DEPTH. INCLUDE ENGINEERED COMPACTED BACKFILL BELOW PAVEMENT SECTION.

PARKING STALL SCHEDULE

DESCRIPTION	COUNT
TOTAL # OF STALLS REQUIRED	17
TOTAL # OF INITIAL CHARGING STALLS	5
TOTAL # OF TRAILER CHARGING STALLS	1
TOTAL # OF FUTURE CHARGING STALLS	3
TOTAL # OF L2 CHARGING STALLS	0
TOTAL # OF STANDARD STALLS	2
NET STALL COUNT	−6

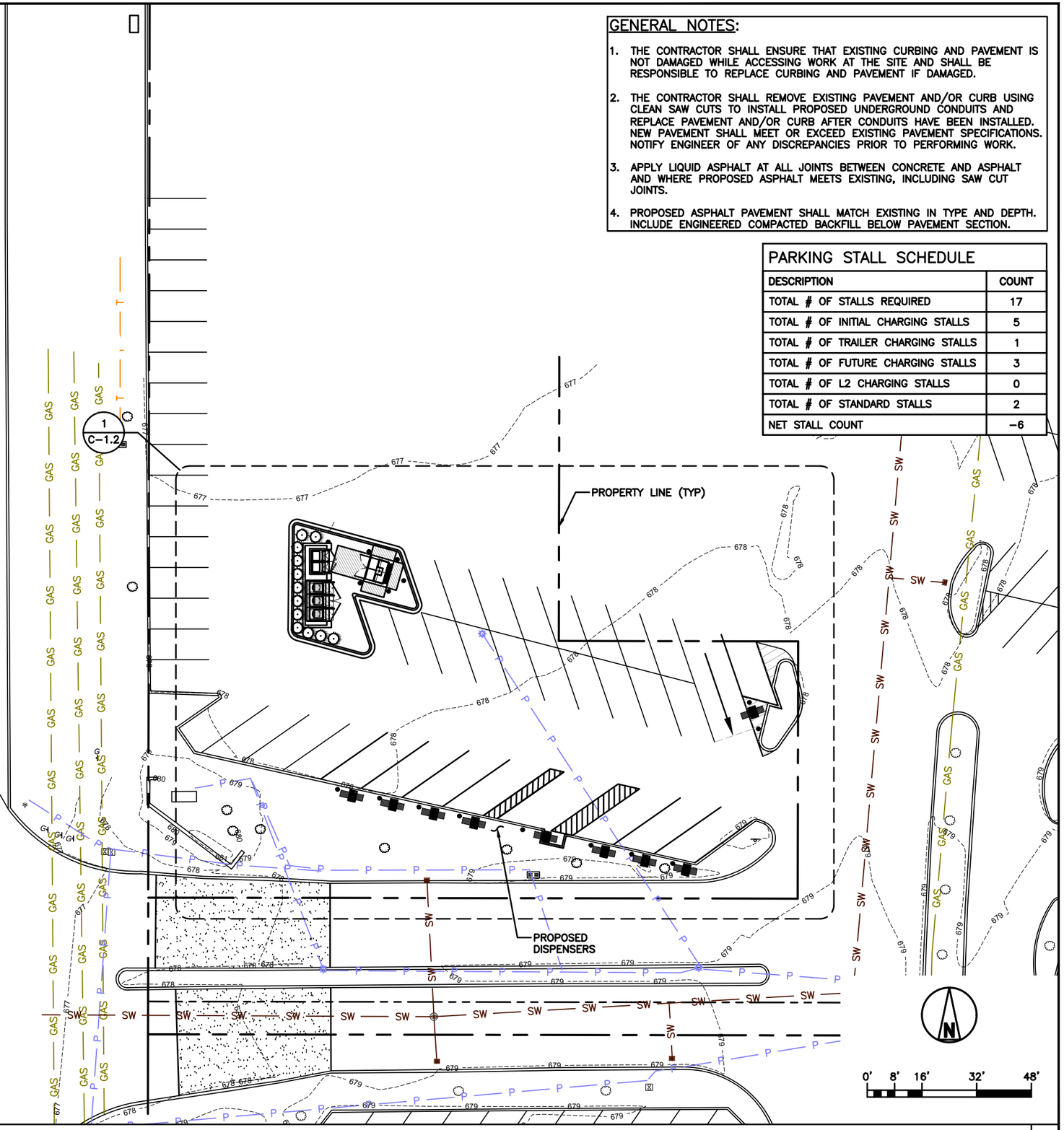

OVERALL SITE PLAN 1

STAMP:

8/30/2024

LICENSED PROFESSIONAL ENGINEER
SHELTON D. KEISLING
062.069129
OF ILLINOIS

Docusigned by:
Shelton Keisling
EF94D8A5B80B407...

ENGINEERING LICENSE:
STATE OF ILLINOIS
PE CERTIFICATE OF AUTHORIZATION # 184.003404

ENGINEER:		PE#:	DISCIPLINE:
SDK	SHELTON D. KEISLING	062-069129	ELECTRICAL
TMS	TERRANCE M. SUPER	062-052514	ELECTRICAL

PLANS PREPARED FOR:
RIVIAN

PLANS PREPARED BY:
SSC

DRAWING NOTICE:
THIS DRAWING HAS NOT BEEN PUBLISHED AND IS THE SOLE PROPERTY OF SSC, INC. AND IS LENT TO THE BORROWER FOR THEIR CONFIDENTIAL USE ONLY, AND IN CONSIDERATION OF THE LOAN OF THIS DRAWING, THE BORROWER PROMISES AND AGREES TO RETURN IT UPON REQUEST AND AGREES THAT IT WILL NOT BE REPRODUCED, COPIED, LENT OR OTHERWISE DISPOSED OF DIRECTLY OR INDIRECTLY, NOR USED FOR ANY PURPOSE OTHER THAN FOR WHICH IT IS FURNISHED.

SUBMITTALS:

DESCRIPTION	DATE	BY	REV
ISSUED FOR CONSTRUCTION	03/30/23	DWO	0
TRAILER STALL REVISED	04/11/23	TX	1
REVISED PER CLIENT COMMENTS	12/20/23	IBA	2
REVISED PER CLIENT COMMENTS	04/23/24	IBA	3
REVISED PER AHJ COMMENTS	08/30/24	IBA	4

APPLICANT SITE NAME:
OAK BROOK

SSC SITE NUMBER:
IL-00002

SITE ADDRESS:
100 OAK BROOK CENTER,
STE. EV
OAK BROOK, IL 60523

SHEET DESCRIPTION:
OVERALL SITE PLAN

SHEET #:
C-1.0

Docusign Envelope ID: 54931469-A40F-46BD-84C4-27E801AD8D1A

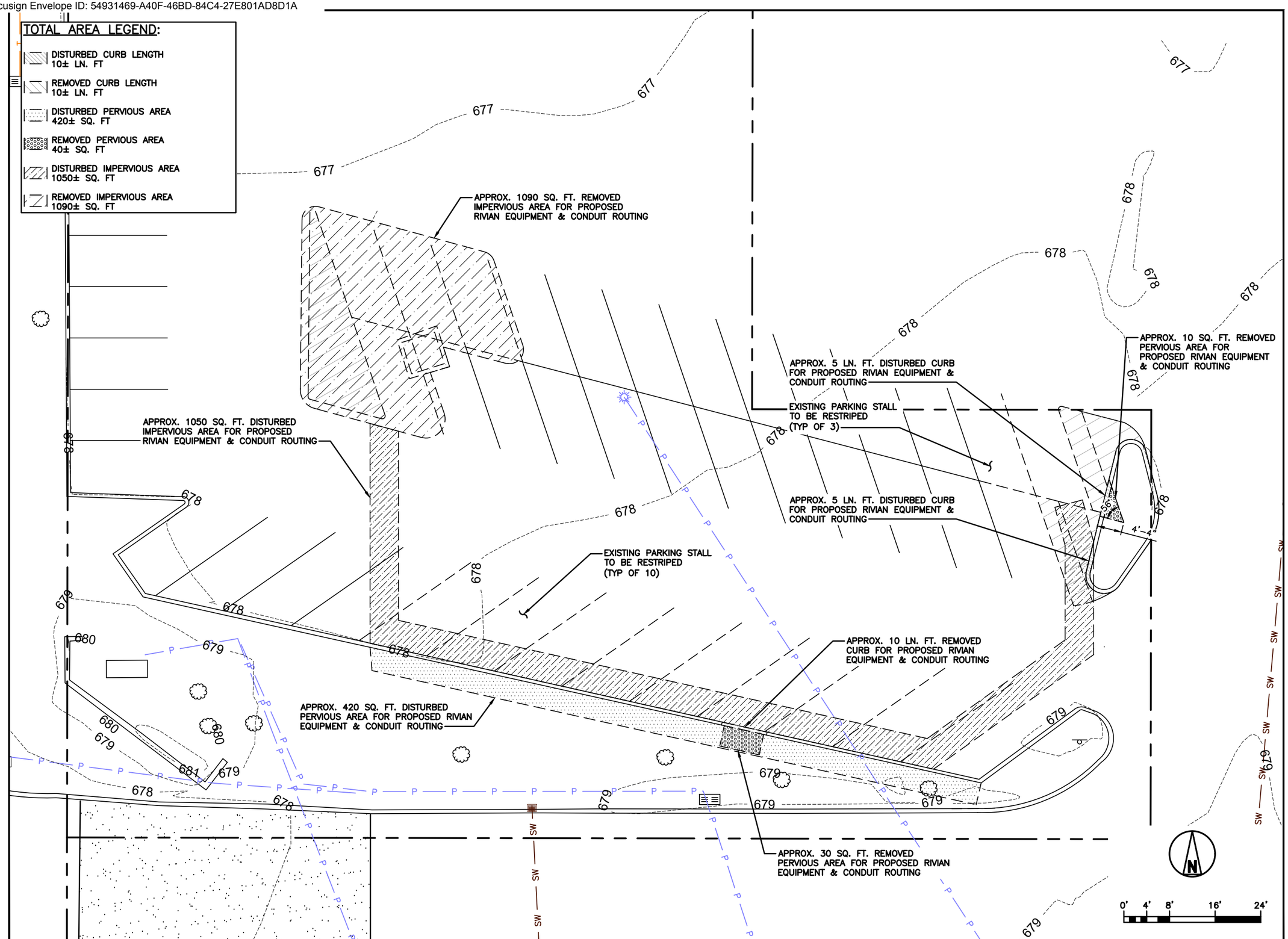

EXISTING SITE PLAN | 1

STAMP:

8/30/2024

LICENSED PROFESSIONAL ENGINEER
SHELTON D. KEISLING
062.069129
OF ILLINOIS

Docusigned by:
Shelton Keisling
EF94D8A5B80B407...

ENGINEERING LICENSE:

STATE OF ILLINOIS

PE CERTIFICATE OF AUTHORIZATION # 184.003404

ENGINEER:		PE#:	DISCIPLINE:
SDK	SHELTON D. KEISLING	062-069129	ELECTRICAL
TMS	TERRANCE M. SUPER	062-052514	ELECTRICAL

PLANS PREPARED FOR:

RIVIAN

PLANS PREPARED BY:

SSC

DRAWING NOTICE:

THIS DRAWING HAS NOT BEEN PUBLISHED AND IS THE SOLE PROPERTY OF SSC, INC. AND IS LENT TO THE BORROWER FOR THEIR CONFIDENTIAL USE ONLY, AND IN CONSIDERATION OF THE LOAN OF THIS DRAWING, THE BORROWER PROMISES AND AGREES TO RETURN IT UPON REQUEST AND AGREES THAT IT WILL NOT BE REPRODUCED, COPIED, LENT OR OTHERWISE DISPOSED OF DIRECTLY OR INDIRECTLY, NOR USED FOR ANY PURPOSE OTHER THAN FOR WHICH IT IS FURNISHED.

SUBMITTALS:

DESCRIPTION	DATE	BY	REV
ISSUED FOR CONSTRUCTION	03/30/23	DWO	0
TRAILER STALL REVISED	04/11/23	TX	1
REVISED PER CLIENT COMMENTS	12/20/23	IBA	2
REVISED PER CLIENT COMMENTS	04/23/24	IBA	3
REVISED PER AHJ COMMENTS	08/30/24	IBA	4

APPLICANT SITE NAME:

OAK BROOK

SSC SITE NUMBER:

IL-00002

SITE ADDRESS:

100 OAK BROOK CENTER,
STE. EV
OAK BROOK, IL 60523

SHEET DESCRIPTION:

EXISTING SITE PLAN

SHEET #:

C-1.1

Docusign Envelope ID: 54931469-A40F-46BD-84C4-27E801AD8D1A

PARKING STALL LEGEND	
DESCRIPTION	SYMBOL
PROPOSED DCFC DISPENSER	#

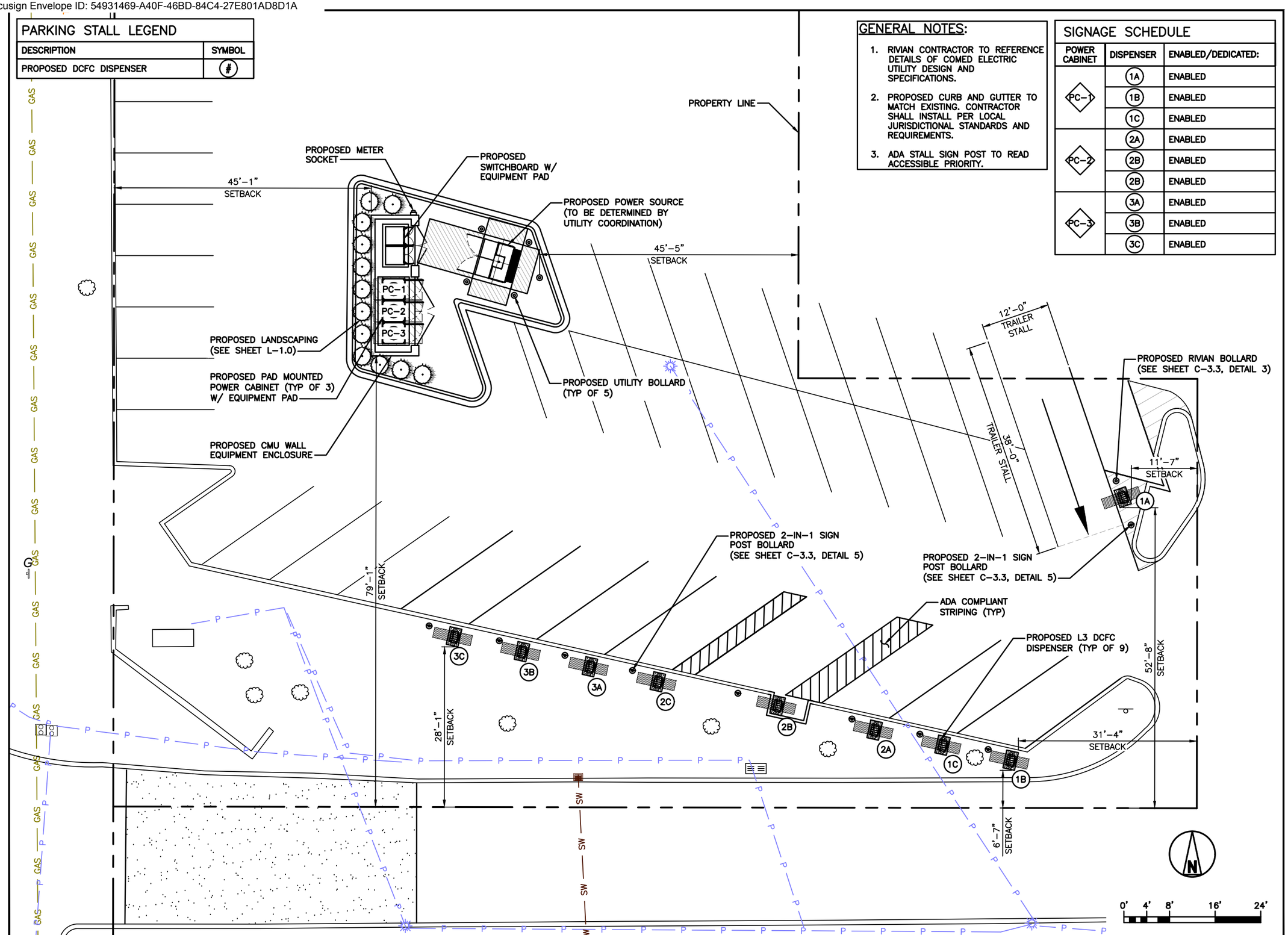

ENLARGED SITE PLAN 1

GENERAL NOTES:

1. RIVIAN CONTRACTOR TO REFERENCE DETAILS OF COMED ELECTRIC UTILITY DESIGN AND SPECIFICATIONS.
2. PROPOSED CURB AND GUTTER TO MATCH EXISTING. CONTRACTOR SHALL INSTALL PER LOCAL JURISDICTIONAL STANDARDS AND REQUIREMENTS.
3. ADA STALL SIGN POST TO READ ACCESSIBLE PRIORITY.

SIGNAGE SCHEDULE

POWER CABINET	DISPENSER	ENABLED/DEDICATED:
PC-1	1A	ENABLED
	1B	ENABLED
	1C	ENABLED
PC-2	2A	ENABLED
	2B	ENABLED
	2B	ENABLED
PC-3	3A	ENABLED
	3B	ENABLED
	3C	ENABLED

STAMP:

8/30/2024

LICENSED PROFESSIONAL ENGINEER
SHELTON D. KEISLING
062.069129
OF ILLINOIS

Docusigned by:
Shelton Keisling
EF94D8A5B80B407...

ENGINEERING LICENSE:
STATE OF ILLINOIS
PE CERTIFICATE OF AUTHORIZATION # 184.003404

ENGINEER:		PE#:	DISCIPLINE:
SDK	SHELTON D. KEISLING	062-069129	ELECTRICAL
TMS	TERRANCE M. SUPER	062-052514	ELECTRICAL

PLANS PREPARED FOR:

RIVIAN

PLANS PREPARED BY:

SSC

DRAWING NOTICE:

THIS DRAWING HAS NOT BEEN PUBLISHED AND IS THE SOLE PROPERTY OF SSC, INC. AND IS LENT TO THE BORROWER FOR THEIR CONFIDENTIAL USE ONLY, AND IN CONSIDERATION OF THE LOAN OF THIS DRAWING, THE BORROWER PROMISES AND AGREES TO RETURN IT UPON REQUEST AND AGREES THAT IT WILL NOT BE REPRODUCED, COPIED, LENT OR OTHERWISE DISPOSED OF DIRECTLY OR INDIRECTLY, NOR USED FOR ANY PURPOSE OTHER THAN FOR WHICH IT IS FURNISHED.

SUBMITTALS:

DESCRIPTION	DATE	BY	REV
ISSUED FOR CONSTRUCTION	03/30/23	DWO	0
TRAILER STALL REVISED	04/11/23	TX	1
REVISED PER CLIENT COMMENTS	12/20/23	IBA	2
REVISED PER CLIENT COMMENTS	04/23/24	IBA	3
REVISED PER AHJ COMMENTS	08/30/24	IBA	4

APPLICANT SITE NAME:

OAK BROOK

SSC SITE NUMBER:

IL-00002

SITE ADDRESS:

100 OAK BROOK CENTER,
STE. EV
OAK BROOK, IL 60523

SHEET DESCRIPTION: ENLARGED SITE PLAN

SHEET #: C-1.2

Docusign Envelope ID: 54931469-A40F-46BD-84C4-27E801AD8D1A

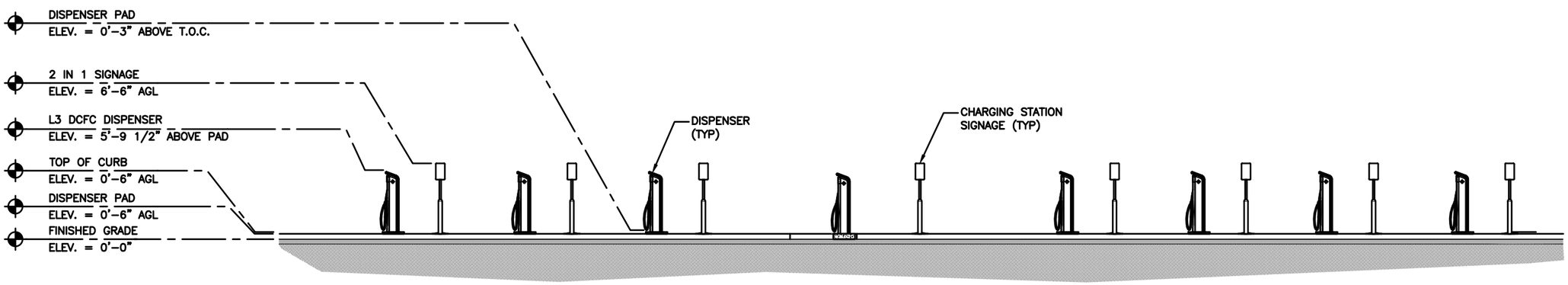

DISPENSER ELEVATION | 1

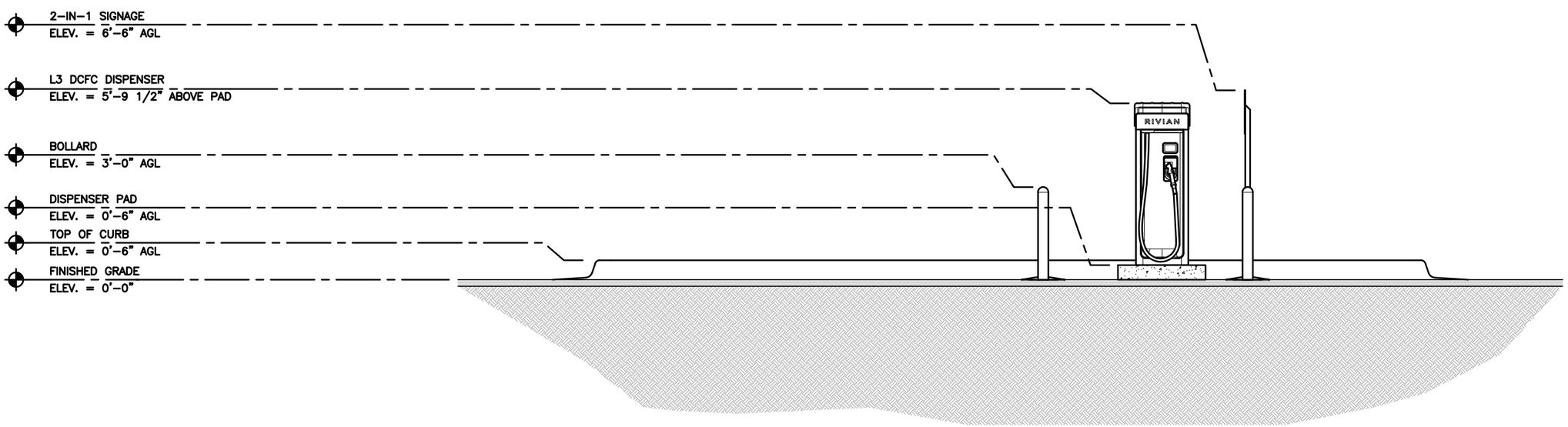

TRAILER STALL ELEVATION | 2

STAMP:

8/30/2024

LICENSED PROFESSIONAL ENGINEER
SHELTON D. KEISLING
062.069129
OF ILLINOIS

Docusigned by:
Shelton Keisling
EF94D8A5B80B407...

ENGINEERING LICENSE:
STATE OF ILLINOIS
PE CERTIFICATE OF AUTHORIZATION # 184.003404

ENGINEER:		PE#:	DISCIPLINE:	
SDK	SHELTON D. KEISLING	062-069129	ELECTRICAL	E
TMS	TERRANCE M. SUPER	062-052514	ELECTRICAL	

PLANS PREPARED FOR:
RIVIAN

PLANS PREPARED BY:
SSC

DRAWING NOTICE:
THIS DRAWING HAS NOT BEEN PUBLISHED AND IS THE SOLE PROPERTY OF SSC, INC. AND IS LENT TO THE BORROWER FOR THEIR CONFIDENTIAL USE ONLY, AND IN CONSIDERATION OF THE LOAN OF THIS DRAWING, THE BORROWER PROMISES AND AGREES TO RETURN IT UPON REQUEST AND AGREES THAT IT WILL NOT BE REPRODUCED, COPIED, LENT OR OTHERWISE DISPOSED OF DIRECTLY OR INDIRECTLY, NOR USED FOR ANY PURPOSE OTHER THAN FOR WHICH IT IS FURNISHED.

SUBMITTALS:

DESCRIPTION	DATE	BY	REV
ISSUED FOR CONSTRUCTION	03/30/23	DWO	0
TRAILER STALL REVISED	04/11/23	TX	1
REVISED PER CLIENT COMMENTS	12/20/23	IBA	2
REVISED PER CLIENT COMMENTS	04/23/24	IBA	3
REVISED PER AHJ COMMENTS	08/30/24	IBA	4

APPLICANT SITE NAME:
OAK BROOK

SSC SITE NUMBER:
IL-00002

SITE ADDRESS:
100 OAK BROOK CENTER,
STE. EV
OAK BROOK, IL 60523

SHEET DESCRIPTION: SITE ELEVATIONS

SHEET #: C-1.3

Docusign Envelope ID: 54931469-A40F-46BD-84C4-27E801AD8D1A

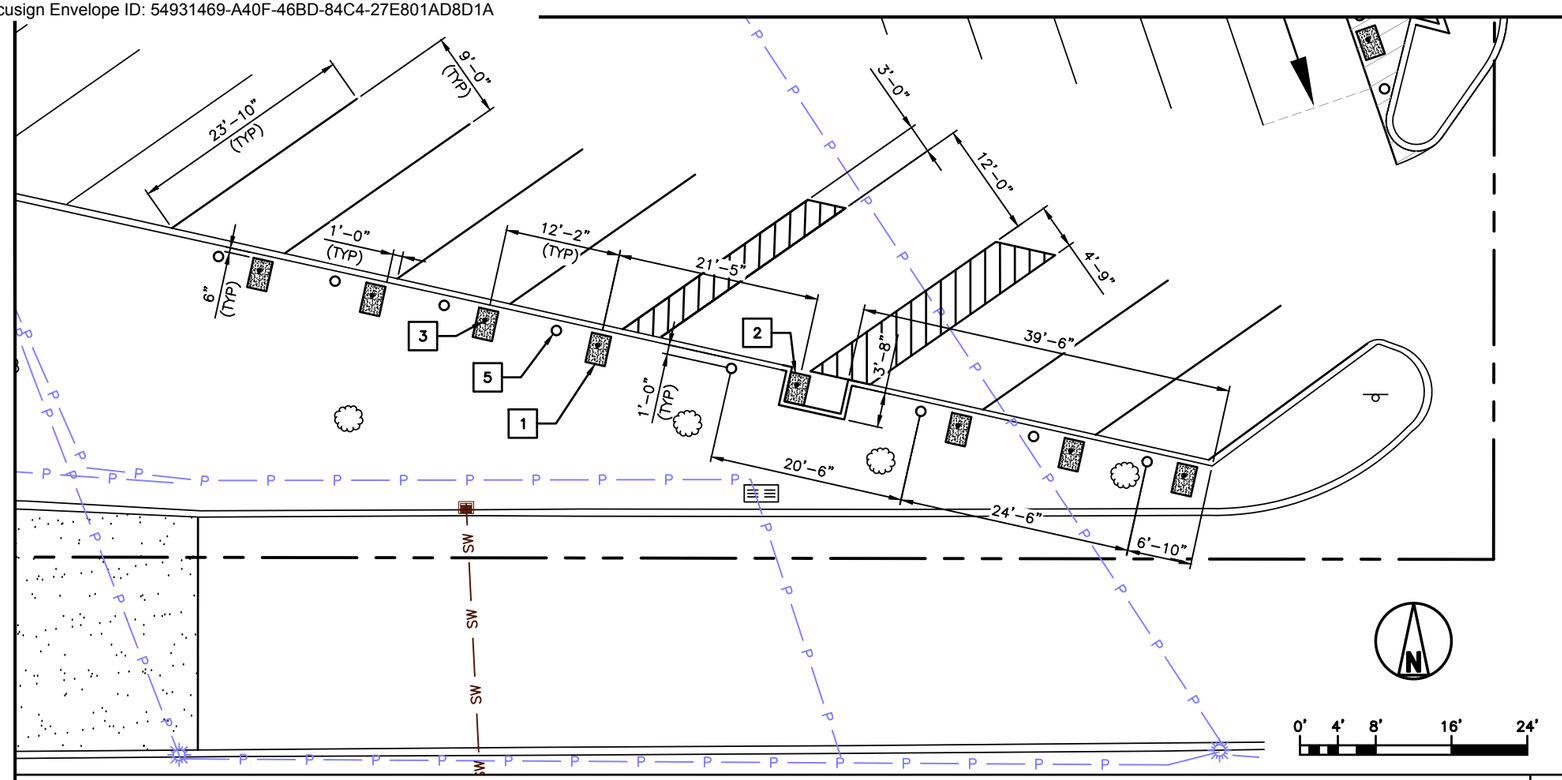

DISPENSER PLAN | 1

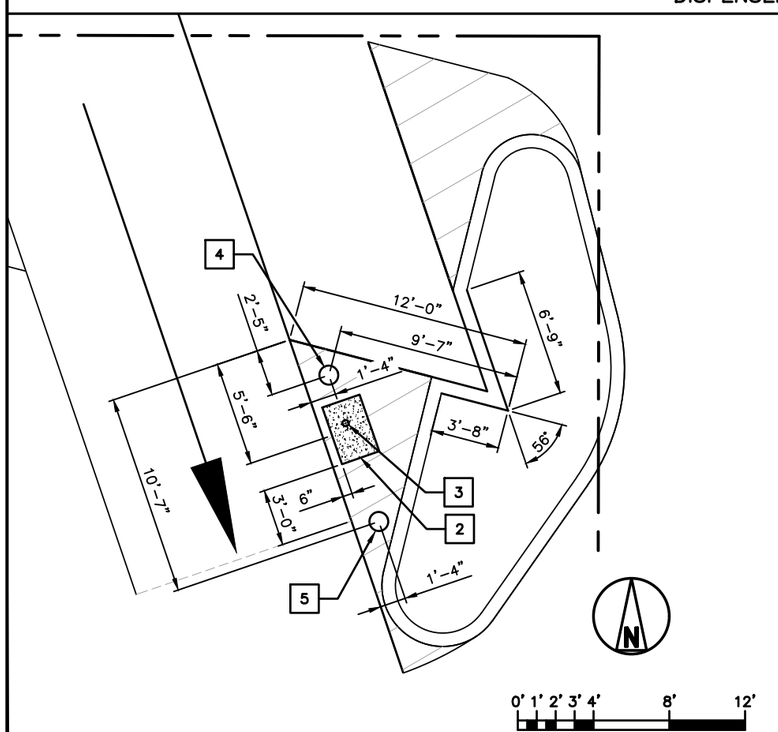

TRAILER DISPENSER PLAN | 3

DETAIL NOT USED | 2

GENERAL NOTES:

1. CONTRACTOR SHALL INSTALL BELL END FITTINGS ON ALL CONDUITS AFTER INSTALLATION.

KEYED NOTES:

1. PROPOSED 3'-2" x 2'-1" PAD FOR DCFC DISPENSERS (TYP OF 7) (SEE SHEET C-3.0, DETAIL 1)
2. PROPOSED 3'-2" X 2'-1" PAD FOR DCFC DISPENSERS (TYP OF 2) (SEE SHEET C-3.0, DETAIL 2)
3. 4" CONDUIT (TYP OF 9)
4. PROPOSED RIVIAN BOLLARD FOUNDATION (SEE SHEET C-3.3)
5. PROPOSED 2-IN-1 SIGNPOST BOLLARD FOUNDATION (TYP OF 9) (SEE SHEET C-3.3)

STAMP:

8/30/2024

LICENSED PROFESSIONAL ENGINEER
SHELTON D. KEISLING
062.069129
OF ILLINOIS

Docusigned by:
Shelton Keisling
EF94D8A5B80B407...

ENGINEERING LICENSE:
STATE OF ILLINOIS
PE CERTIFICATE OF AUTHORIZATION # 184.003404

ENGINEER:		PE#:	DISCIPLINE:
SDK	SHELTON D. KEISLING	062-069129	ELECTRICAL
TMS	TERRANCE M. SUPER	062-052514	ELECTRICAL

PLANS PREPARED FOR:

RIVIAN

PLANS PREPARED BY:

SSC

DRAWING NOTICE:
THIS DRAWING HAS NOT BEEN PUBLISHED AND IS THE SOLE PROPERTY OF SSC, INC. AND IS LENT TO THE BORROWER FOR THEIR CONFIDENTIAL USE ONLY, AND IN CONSIDERATION OF THE LOAN OF THIS DRAWING, THE BORROWER PROMISES AND AGREES TO RETURN IT UPON REQUEST AND AGREES THAT IT WILL NOT BE REPRODUCED, COPIED, LENT OR OTHERWISE DISPOSED OF DIRECTLY OR INDIRECTLY, NOR USED FOR ANY PURPOSE OTHER THAN FOR WHICH IT IS FURNISHED.

SUBMITTALS:

DESCRIPTION	DATE	BY	REV
ISSUED FOR CONSTRUCTION	03/30/23	DWO	0
TRAILER STALL REVISED	04/11/23	TX	1
REVISED PER CLIENT COMMENTS	12/20/23	IBA	2
REVISED PER CLIENT COMMENTS	04/23/24	IBA	3
REVISED PER AHJ COMMENTS	08/30/24	IBA	4

APPLICANT SITE NAME:
OAK BROOK

SSC SITE NUMBER:
IL-00002

SITE ADDRESS:
100 OAK BROOK CENTER,
STE. EV
OAK BROOK, IL 60523

SHEET DESCRIPTION:
EQUIPMENT PLANS (1 OF 2)

SHEET #:
C-2.0

Docusign Envelope ID: 54931469-A40F-46BD-84C4-27E801AD8D1A

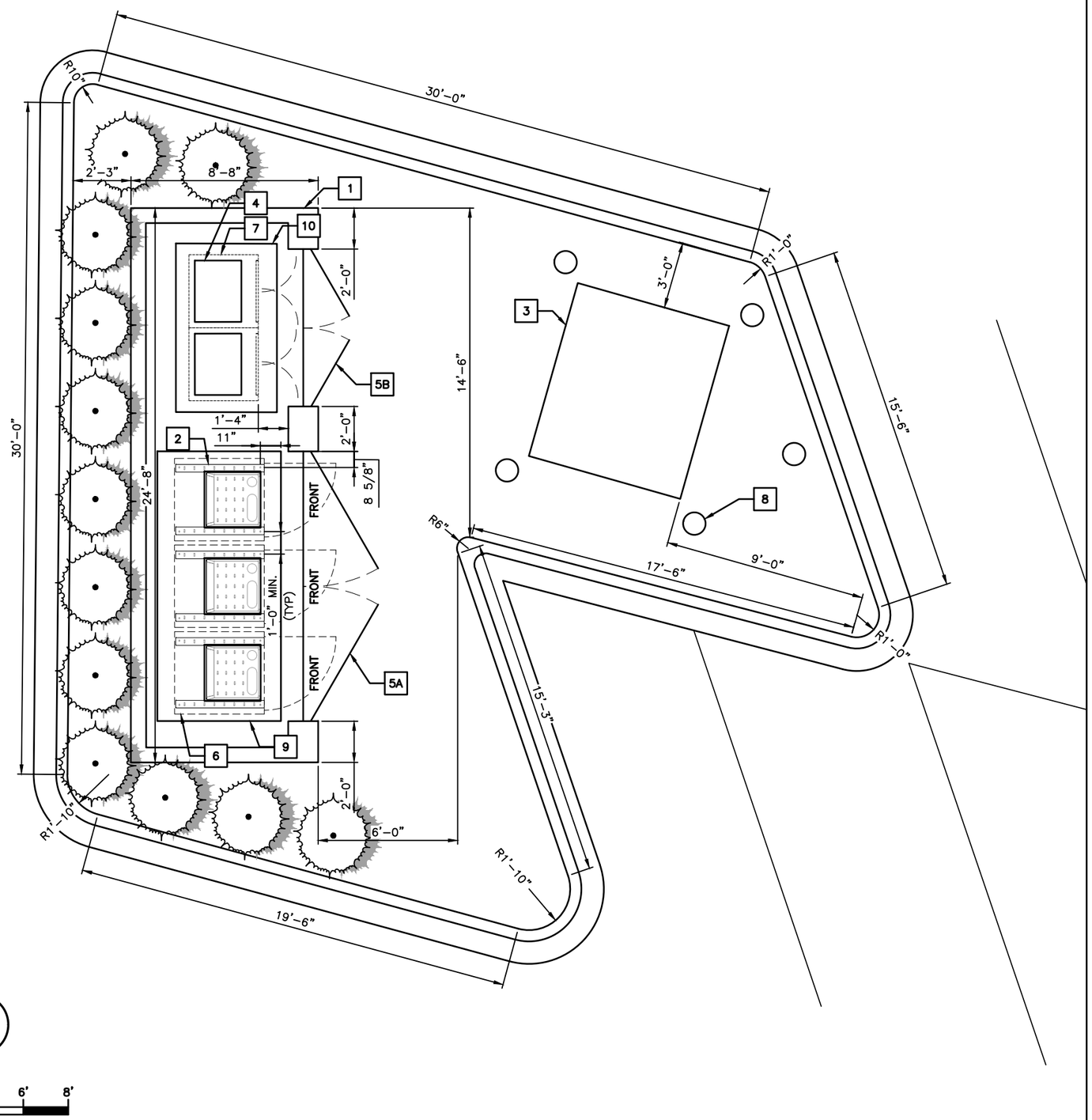

EQUIPMENT ENCLOSURE PLAN | 1

GENERAL NOTES:

1. CONTRACTOR SHALL INSTALL BELL END FITTINGS ON ALL CONDUITS AFTER INSTALLATION.
2. SPACING FOR POWER CABINETS SHALL BE MEASURED FROM CENTER OF BOLT HOLE TO CENTER OF BOLT HOLE.

KEYED NOTES:

1. PROPOSED CMU ENCLOSURE FOUNDATION (SEE SHEET C-4.2)
2. PROPOSED RIVIAN SITE BOX (TYP OF 3) (SEE SHEET C-3.2)
3. PROPOSED 8'-0" x 7'-0" TRANSFORMER FOUNDATION
4. PROPOSED SWITCHBOARD CONDUIT BLOCKOUT (TYP OF 2) (SEE SWITCHBOARD SHOP DRAWINGS)
5A. PROPOSED 12'-0" GATE MASONRY OPENING
5B. PROPOSED 6'-8" GATE MASONRY OPENING
6. POWER CABINET FOOTPRINT & DOOR SWINGS (TYP)
7. SWITCHBOARD FOOTPRINT & DOOR SWINGS
8. PROPOSED UTILITY BOLLARD FOUNDATION (TYP OF 5) (RIVIAN CONTRACTOR TO REFERENCE DETAILS OF COMED ELECTRIC UTILITY DESIGNS AND SPECIFICATIONS)
9. PROPOSED 12'-0" X 5'-6" POWER CABINET FOUNDATION (SEE SHEET C-3.1 & C-3.2)
10. PROPOSED 7'-6" x 4'-6" SWITCHBOARD FOUNDATION (SEE SHEET C-3.1)

STAMP:

8/30/2024

LICENSED PROFESSIONAL ENGINEER
SHELTON D. KEISLING
062.069129
OF ILLINOIS

Docusigned by:
Shelton Keisling
EF94D8A5B80B407...

ENGINEERING LICENSE:
STATE OF ILLINOIS
PE CERTIFICATE OF AUTHORIZATION # 184.003404

ENGINEER:		PE#:	DISCIPLINE:	
SDK	SHELTON D. KEISLING	062-069129	ELECTRICAL	
TMS	TERRANCE M. SUPER	062-052514	ELECTRICAL	

PLANS PREPARED FOR:

RIVIAN

PLANS PREPARED BY:

SSC

DRAWING NOTICE:
THIS DRAWING HAS NOT BEEN PUBLISHED AND IS THE SOLE PROPERTY OF SSC, INC. AND IS LENT TO THE BORROWER FOR THEIR CONFIDENTIAL USE ONLY, AND IN CONSIDERATION OF THE LOAN OF THIS DRAWING, THE BORROWER PROMISES AND AGREES TO RETURN IT UPON REQUEST AND AGREES THAT IT WILL NOT BE REPRODUCED, COPIED, LENT OR OTHERWISE DISPOSED OF DIRECTLY OR INDIRECTLY, NOR USED FOR ANY PURPOSE OTHER THAN FOR WHICH IT IS FURNISHED.

SUBMITTALS:

DESCRIPTION	DATE	BY	REV
ISSUED FOR CONSTRUCTION	03/30/23	DWO	0
TRAILER STALL REVISED	04/11/23	TX	1
REVISED PER CLIENT COMMENTS	12/20/23	IBA	2
REVISED PER CLIENT COMMENTS	04/23/24	IBA	3
REVISED PER AHJ COMMENTS	08/30/24	IBA	4

APPLICANT SITE NAME:
OAK BROOK

SSC SITE NUMBER:
IL-00002

SITE ADDRESS:
100 OAK BROOK CENTER,
STE. EV
OAK BROOK, IL 60523

SHEET DESCRIPTION:
EQUIPMENT PLANS (2 OF 2)

SHEET #:
C-2.1

Docusign Envelope ID: 54931469-A40F-46BD-84C4-27E801AD8D1A

GRAVEL NOTE:

GRAVEL SHALL BE NATURAL OR CRUSHED STONE WITH 100 PERCENT PASSING 1 INCH SIEVE.

FOUNDATION NOTE:

MINIMUM SOIL BEARING CAPACITY OF 1500 PSF IS ASSUMED IN ALL FOUNDATIONS AND SLAB AREAS. (GENERAL CONTRACTOR SHALL VERIFY PRIOR TO CONSTRUCTION)

SPECIFICATIONS:

DIMENSIONS (HxDxW):

DISPENSER: 69.5"x22.5"x13.5"

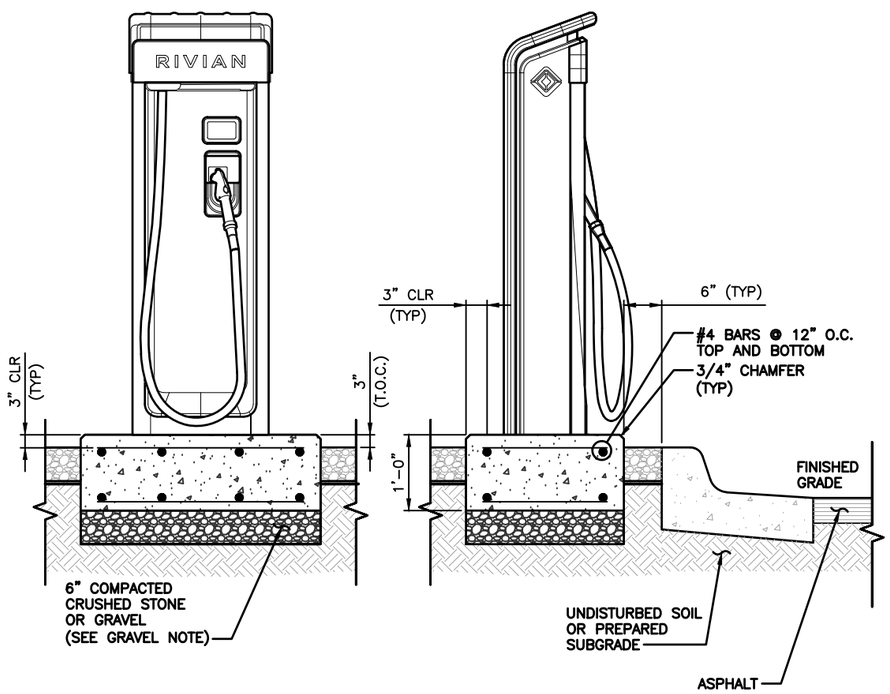

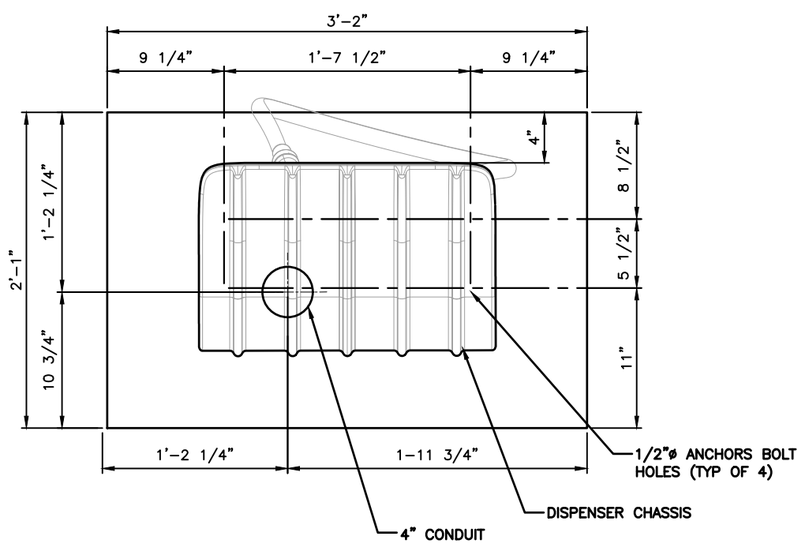

DCFC DISPENSER DETAIL | 1

GRAVEL NOTE:

GRAVEL SHALL BE NATURAL OR CRUSHED STONE WITH 100 PERCENT PASSING 1 INCH SIEVE.

FOUNDATION NOTE:

MINIMUM SOIL BEARING CAPACITY OF 1500 PSF IS ASSUMED IN ALL FOUNDATIONS AND SLAB AREAS. (GENERAL CONTRACTOR SHALL VERIFY PRIOR TO CONSTRUCTION)

SPECIFICATIONS:

DIMENSIONS (HxDxW):

DISPENSER: 69.5"x22.5"x13.5"

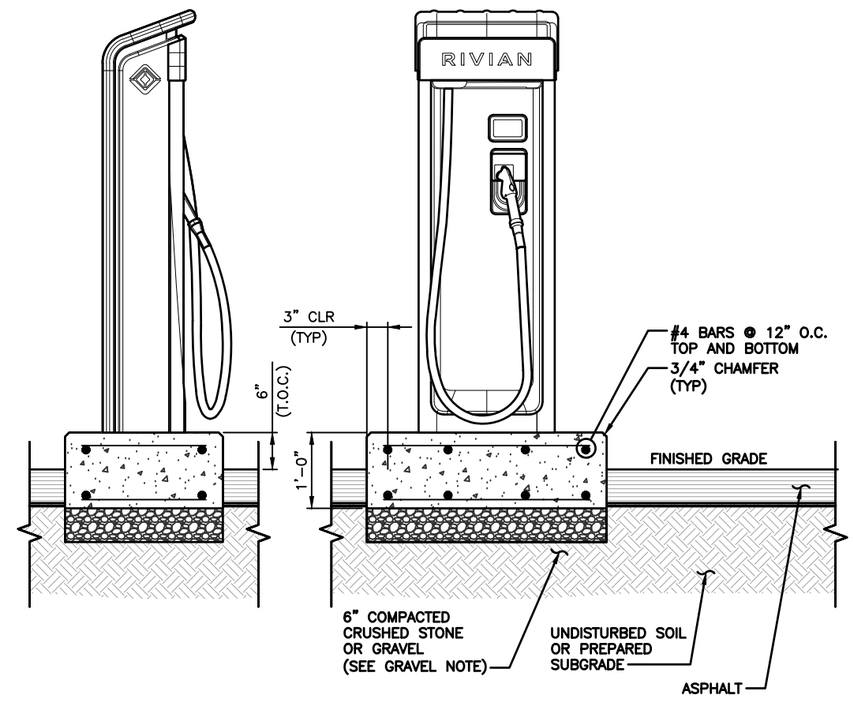

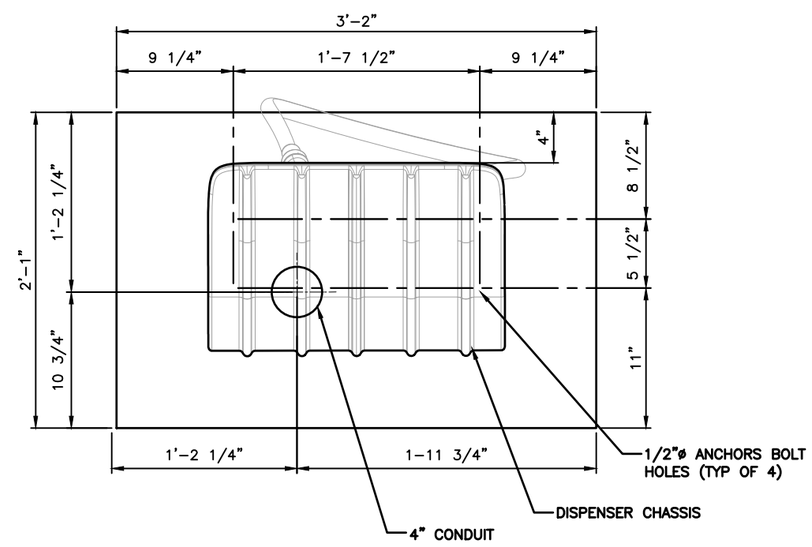

DCFC DISPENSER DETAIL | 2

STAMP:

8/30/2024

LICENSED PROFESSIONAL ENGINEER
SHELTON D. KEISLING
062.069129
OF ILLINOIS

Docusigned by:
Shelton Keisling
EF94D8A5B80B407...

ENGINEERING LICENSE:

STATE OF ILLINOIS

PE CERTIFICATE OF AUTHORIZATION # 184.003404

ENGINEER:		PE#:	DISCIPLINE:
SDK	SHELTON D. KEISLING	062-069129	ELECTRICAL
TMS	TERRANCE M. SUPER	062-052514	ELECTRICAL

PLANS PREPARED FOR:

RIVIAN

PLANS PREPARED BY:

SSC

DRAWING NOTICE:

THIS DRAWING HAS NOT BEEN PUBLISHED AND IS THE SOLE PROPERTY OF SSC, INC. AND IS LENT TO THE BORROWER FOR THEIR CONFIDENTIAL USE ONLY, AND IN CONSIDERATION OF THE LOAN OF THIS DRAWING, THE BORROWER PROMISES AND AGREES TO RETURN IT UPON REQUEST AND AGREES THAT IT WILL NOT BE REPRODUCED, COPIED, LENT OR OTHERWISE DISPOSED OF DIRECTLY OR INDIRECTLY, NOR USED FOR ANY PURPOSE OTHER THAN FOR WHICH IT IS FURNISHED.

SUBMITTALS:

DESCRIPTION	DATE	BY	REV
ISSUED FOR CONSTRUCTION	03/30/23	DWO	0
TRAILER STALL REVISED	04/11/23	TX	1
REVISED PER CLIENT COMMENTS	12/20/23	IBA	2
REVISED PER CLIENT COMMENTS	04/23/24	IBA	3
REVISED PER AHJ COMMENTS	08/30/24	IBA	4

APPLICANT SITE NAME:

OAK BROOK

SSC SITE NUMBER:

IL-00002

SITE ADDRESS:

100 OAK BROOK CENTER,
STE. EV
OAK BROOK, IL 60523

SHEET DESCRIPTION: EQUIPMENT DETAILS (1 OF 4)

SHEET #: C-3.0

Docusign Envelope ID: 54931469-A40F-46BD-84C4-27E801AD8D1A

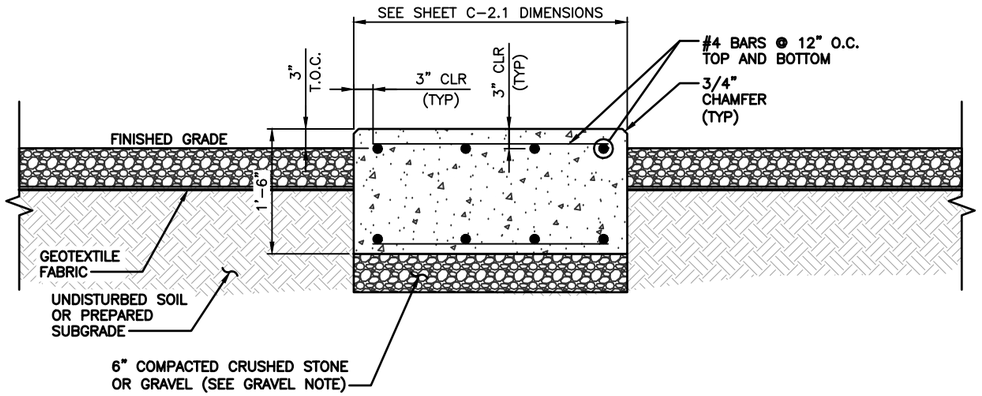

GRAVEL NOTE:

GRAVEL SHALL BE NATURAL OR CRUSHED STONE WITH 100 PERCENT PASSING 1 INCH SIEVE.

FOUNDATION NOTE:

MINIMUM SOIL BEARING CAPACITY OF 1500 PSF IS ASSUMED IN ALL FOUNDATIONS AND SLAB AREAS. (GENERAL CONTRACTOR SHALL VERIFY PRIOR TO CONSTRUCTION)

GROUNDING NOTE:

SEE SHEET G-2.0, DETAIL 4 FOR SWITCHBOARD FOUNDATION GROUNDING PLAN.

RIVIAN POWER CABINET AND SWITCHBOARD FOUNDATION SECTION | 1

DETAIL NOT USED | 2

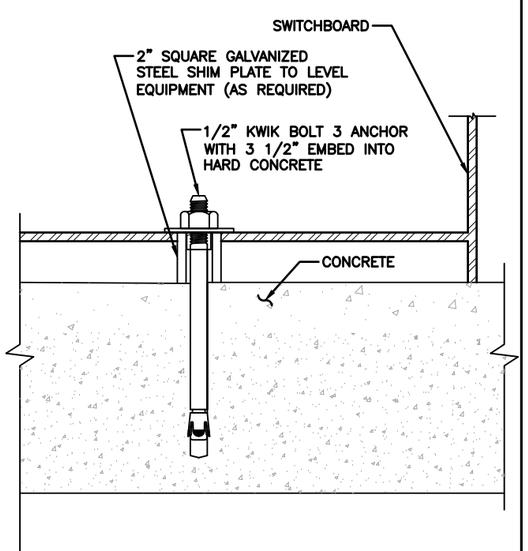

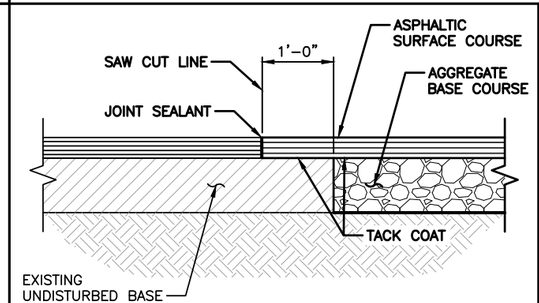

SAW CUT SECTION

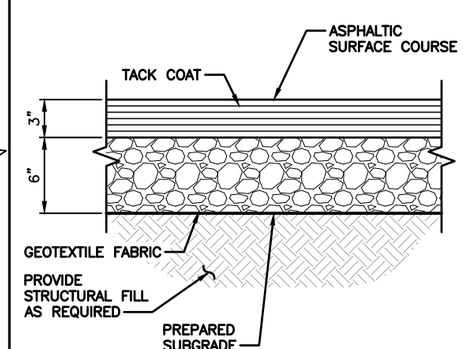

ASPHALTIC PAVING SECTION

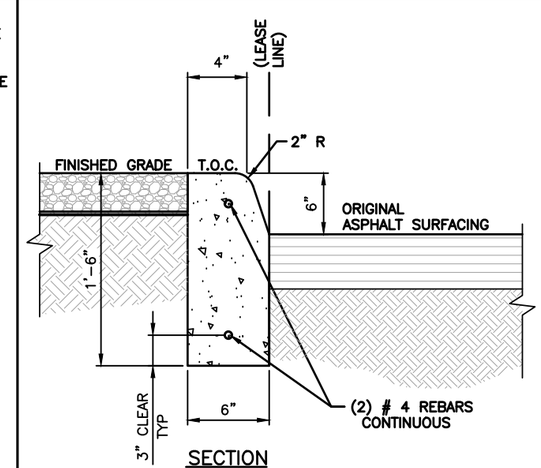

SECTION

GENERAL NOTE:

DIMENSIONS SHOWN FOR MINIMUM CURB REQUIREMENTS. CONTRACTOR TO MATCH EXISTING SITE CONDITIONS.

CURB NOTE:

1. SAW CUT AND REMOVE EXISTING ASPHALT WITHIN THE LIMITS INDICATED ON THE SITE PLAN (DETAIL 1).
2. CONTROL JOINTS SHALL BE 2" DEEP, AND PLACED AT 15'-0" INTERVALS EQUALLY SPACED BETWEEN CONSTRUCTION JOINTS.

DETAIL NOT USED | 6

SWITCHBOARD ANCHORAGE DETAIL | 5

ASPHALT REPAIR DETAIL | 4

CURB DETAIL | 3

STAMP:

8/30/2024

LICENSED PROFESSIONAL ENGINEER
SHELTON D. KEISLING
062.069129
OF ILLINOIS

Docusigned by:
Shelton Keisling
EF94D8A5B80B407...

ENGINEERING LICENSE:

STATE OF ILLINOIS

PE CERTIFICATE OF AUTHORIZATION # 184.003404

ENGINEER:		PE#:	DISCIPLINE:	
SDK	SHELTON D. KEISLING	062-069129	ELECTRICAL	E
TMS	TERRANCE M. SUPER	062-052514	ELECTRICAL	E

PLANS PREPARED FOR:

RIVIAN

PLANS PREPARED BY:

SSC

DRAWING NOTICE:

THIS DRAWING HAS NOT BEEN PUBLISHED AND IS THE SOLE PROPERTY OF SSC, INC. AND IS LENT TO THE BORROWER FOR THEIR CONFIDENTIAL USE ONLY, AND IN CONSIDERATION OF THE LOAN OF THIS DRAWING, THE BORROWER PROMISES AND AGREES TO RETURN IT UPON REQUEST AND AGREES THAT IT WILL NOT BE REPRODUCED, COPIED, LENT OR OTHERWISE DISPOSED OF DIRECTLY OR INDIRECTLY, NOR USED FOR ANY PURPOSE OTHER THAN FOR WHICH IT IS FURNISHED.

SUBMITTALS:

DESCRIPTION	DATE	BY	REV
ISSUED FOR CONSTRUCTION	03/30/23	DWO	0
TRAILER STALL REVISED	04/11/23	TX	1
REVISED PER CLIENT COMMENTS	12/20/23	IBA	2
REVISED PER CLIENT COMMENTS	04/23/24	IBA	3
REVISED PER AHJ COMMENTS	08/30/24	IBA	4

APPLICANT SITE NAME:

OAK BROOK

SSC SITE NUMBER:

IL-00002

SITE ADDRESS:

100 OAK BROOK CENTER, STE. EV
OAK BROOK, IL 60523

SHEET DESCRIPTION:

EQUIPMENT DETAILS (2 OF 4)

SHEET #:

C-3.1

Docusign Envelope ID: 54931469-A40F-46BD-84C4-27E801AD8D1A

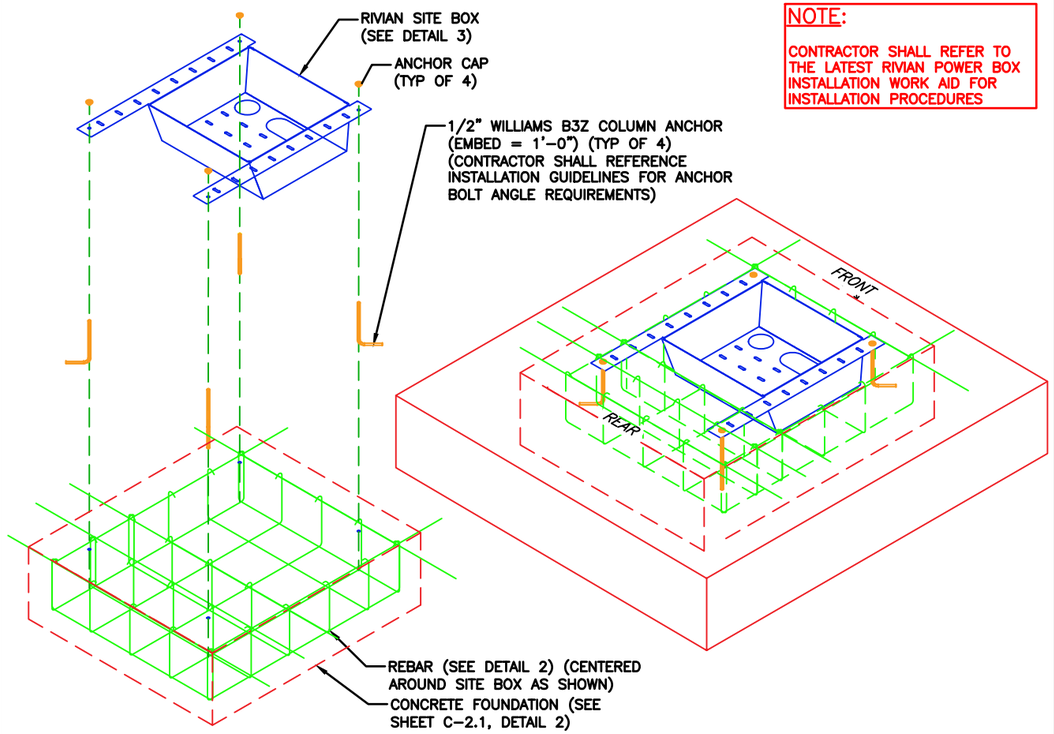

NOTE:

CONTRACTOR SHALL REFER TO THE LATEST RIVIAN POWER BOX INSTALLATION WORK AID FOR INSTALLATION PROCEDURES

RIVIAN POWER CABINET SITE BOX ISOMETRIC DETAIL | 1

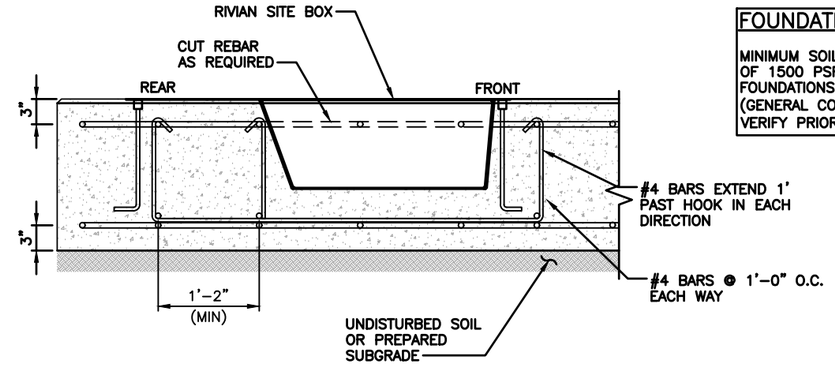

FOUNDATION NOTE:

MINIMUM SOIL BEARING CAPACITY OF 1500 PSF IS ASSUMED IN ALL FOUNDATIONS AND SLAB AREAS. (GENERAL CONTRACTOR SHALL VERIFY PRIOR TO CONSTRUCTION)

NOTES:

1. FOUNDATION AREA SHALL BE EXCAVATED TO THE DEPTH AND DIMENSIONS SHOWN ON THE PLANS. OTHER UNSUITABLE MATERIAL SHALL BE REMOVED AND LEGALLY DISPOSED OF OFF-SITE. THE SUBGRADE SHALL BE ROLLED WITH A 1-TON, VIBRATORY, WALK-BEHIND ROLLER AT A SPEED OF LESS THAN 2 FPS, 6 PASSES MINIMUM, TO PROVIDE UNYIELDING SURFACE.
2. UNDERCUT SOFT OR "WEAVING" AREAS A MINIMUM OF 1'-0" DEEP. BACKFILL UNDERCUT AREA WITH FILL MEETING THE SPECIFICATIONS OF STRUCTURAL FILL.
3. REINFORCING BAR TO BE ASTM A615 GRADE 60.
4. ALL REINFORCING TO HAVE MINIMUM CONCRETE COVER PER ACI SPECIFICATIONS.
5. ALL CONCRETE MATERIALS AND PROFESSIONAL TECHNIQUES SHALL CONFORM TO ACI 318-14 AND APPLICABLE STATE BUILDING CODE.
6. 100% TIES FOR REBAR OVERLAP. NO COLD JOINTS SHALL BE PERMITTED.
7. CONTRACTOR SHALL INSTALL 1/8" STEEL DIAMOND PLATE TO COVER ALL SITE BOXES FOR FUTURE POWER CABINETS. BOLT PLATE IN PLACE USING BOLT HOLES.

POWER CABINET EQUIPMENT PAD DETAIL | 2

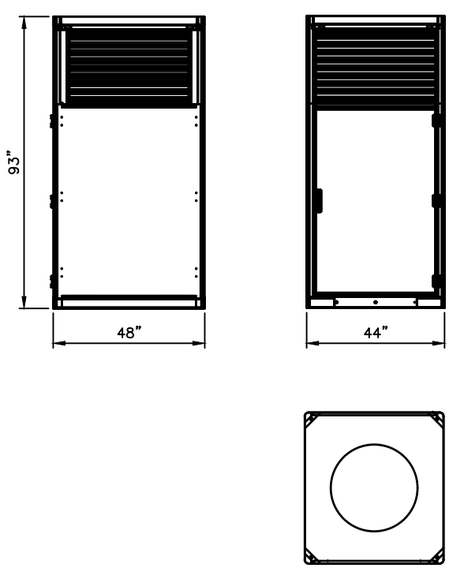

SPECIFICATIONS:

DIMENSIONS (HxDxW): 93"x48"x44"

POWER CABINET DETAIL | 5

REAR

FRONT

RIVIAN SITE BOX PHOTOS | 4

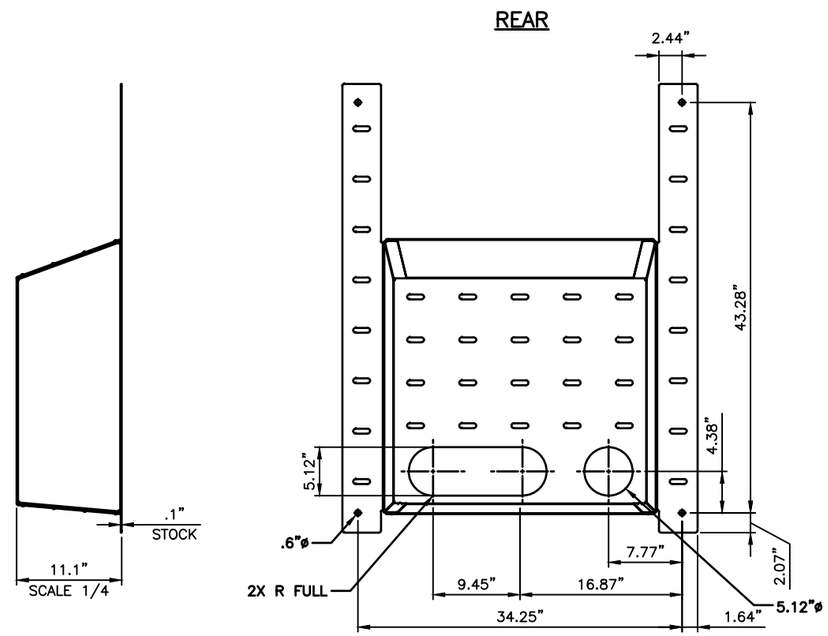

RIVIAN POWER CABINET SITE BOX DETAIL | 3

STAMP:

8/30/2024

LICENSED PROFESSIONAL ENGINEER
SHELTON D. KEISLING
062.069129
OF ILLINOIS

Docusigned by: Shelton Keisling
EF94D8A5B80B407...

ENGINEERING LICENSE:

STATE OF ILLINOIS

PE CERTIFICATE OF AUTHORIZATION # 184.003404

ENGINEER:		PE#:	DISCIPLINE:
SDK	SHELTON D. KEISLING	062-069129	ELECTRICAL
TMS	TERRANCE M. SUPER	062-052514	ELECTRICAL

PLANS PREPARED FOR: RIVIAN

PLANS PREPARED BY: SSC

DRAWING NOTICE:

THIS DRAWING HAS NOT BEEN PUBLISHED AND IS THE SOLE PROPERTY OF SSC, INC. AND IS LENT TO THE BORROWER FOR THEIR CONFIDENTIAL USE ONLY, AND IN CONSIDERATION OF THE LOAN OF THIS DRAWING, THE BORROWER PROMISES AND AGREES TO RETURN IT UPON REQUEST AND AGREES THAT IT WILL NOT BE REPRODUCED, COPIED, LENT OR OTHERWISE DISPOSED OF DIRECTLY OR INDIRECTLY, NOR USED FOR ANY PURPOSE OTHER THAN FOR WHICH IT IS FURNISHED.

SUBMITTALS:

DESCRIPTION	DATE	BY	REV
ISSUED FOR CONSTRUCTION	03/30/23	DWO	0
TRAILER STALL REVISED	04/11/23	TX	1
REVISED PER CLIENT COMMENTS	12/20/23	IBA	2
REVISED PER CLIENT COMMENTS	04/23/24	IBA	3
REVISED PER AHJ COMMENTS	08/30/24	IBA	4

APPLICANT SITE NAME: OAK BROOK

SSC SITE NUMBER: IL-00002

SITE ADDRESS: 100 OAK BROOK CENTER, STE. EV OAK BROOK, IL 60523

SHEET DESCRIPTION: EQUIPMENT DETAILS (3 OF 4)

SHEET #: C-3.2

Docusign Envelope ID: 54931469-A40F-46BD-84C4-27E801AD8D1A

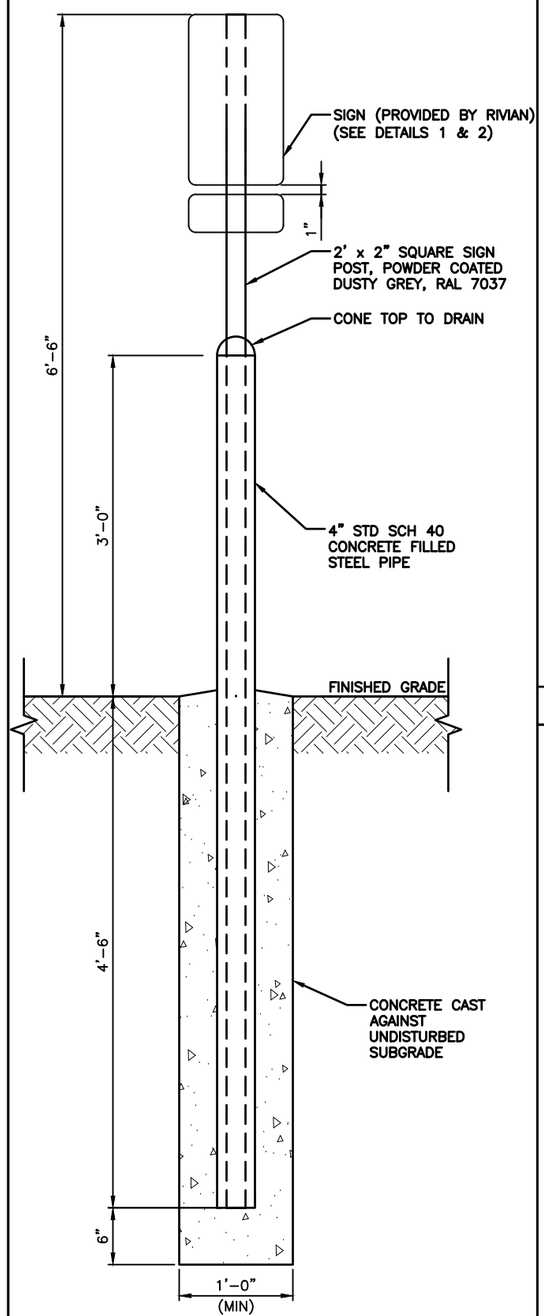

SPECIFICATIONS:

MATERIAL:	STEEL
FINISH:	POWDER COATED – SEMI GLOSS
COLORING:	DUSTY GREY, RAL 7037

DETAIL NOT USED | 6

2-IN-1 BOLLARD DETAIL | 5

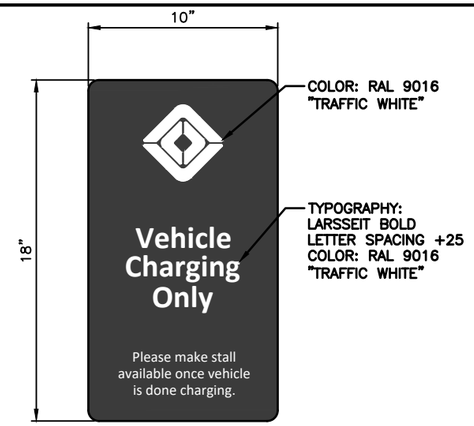

SPECIFICATIONS:

DIMENSIONS (WxH):	10" x 18"
MATERIAL:	1/8" THICK POWDER COATED ALUMINUM
FINISH:	RAL 6012 SATIN FINISH
GRAPHICS:	APPLIED VINYL OR DIRECT PRINTED (EXTERIOR-GRADE)

DEDICATED DISPENSER SIGN DETAIL | 1

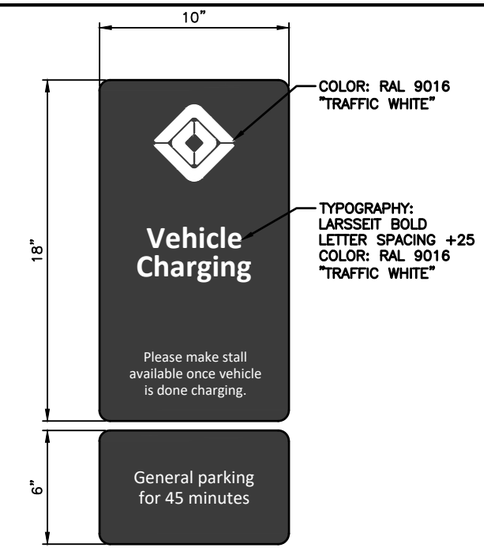

SPECIFICATIONS:

DIMENSIONS (WxH):	10" x 18" & 10" x 6"
MATERIAL:	1/8" THICK POWDER COATED ALUMINUM
FINISH:	RAL 6012 SATIN FINISH
GRAPHICS:	APPLIED VINYL OR DIRECT PRINTED (EXTERIOR-GRADE)

ENABLED DISPENSER SIGN DETAIL | 2

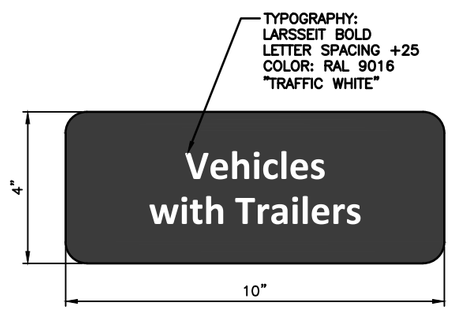

SPECIFICATIONS:

DIMENSIONS (WxH):	10" x 4"
MATERIAL:	1/8" THICK POWDER COATED ALUMINUM
FINISH:	RAL 6012 SATIN FINISH
GRAPHICS:	APPLIED VINYL OR DIRECT PRINTED (EXTERIOR-GRADE)

TRAILER ACCESSIBLE SIGN DETAIL | 4

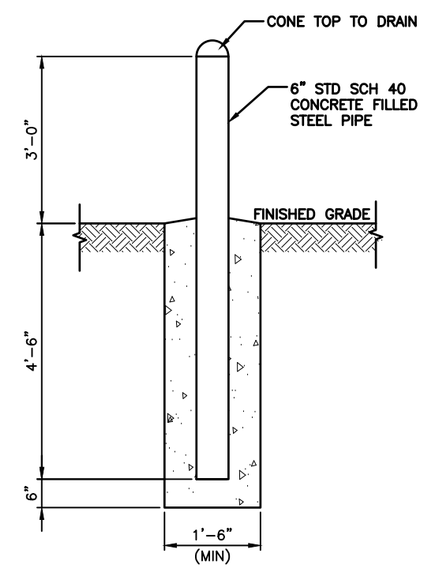

SPECIFICATIONS:

MATERIAL:	STEEL
FINISH:	POWDER COATED – SEMI GLOSS
COLORING:	DUSTY GREY, RAL 7037

BOLLARD POST MOUNT DETAIL | 3

STAMP:

8/30/2024

LICENSED PROFESSIONAL ENGINEER
SHELTON D. KEISLING
062.069129
OF ILLINOIS

Docusigned by:
Shelton Keisling
EF94D8A5B80B407...

ENGINEERING LICENSE:
STATE OF ILLINOIS
PE CERTIFICATE OF AUTHORIZATION # 184.003404

ENGINEER:		PE#:	DISCIPLINE:
SDK	SHELTON D. KEISLING	062-069129	ELECTRICAL
TMS	TERRANCE M. SUPER	062-052514	ELECTRICAL

PLANS PREPARED FOR:

RIVIAN

PLANS PREPARED BY:

SSC

DRAWING NOTICE:
THIS DRAWING HAS NOT BEEN PUBLISHED AND IS THE SOLE PROPERTY OF SSC, INC. AND IS LENT TO THE BORROWER FOR THEIR CONFIDENTIAL USE ONLY, AND IN CONSIDERATION OF THE LOAN OF THIS DRAWING, THE BORROWER PROMISES AND AGREES TO RETURN IT UPON REQUEST AND AGREES THAT IT WILL NOT BE REPRODUCED, COPIED, LENT OR OTHERWISE DISPOSED OF DIRECTLY OR INDIRECTLY, NOR USED FOR ANY PURPOSE OTHER THAN FOR WHICH IT IS FURNISHED.

SUBMITTALS:

DESCRIPTION	DATE	BY	REV
ISSUED FOR CONSTRUCTION	03/30/23	DWO	0
TRAILER STALL REVISED	04/11/23	TX	1
REVISED PER CLIENT COMMENTS	12/20/23	IBA	2
REVISED PER CLIENT COMMENTS	04/23/24	IBA	3
REVISED PER AHJ COMMENTS	08/30/24	IBA	4

APPLICANT SITE NAME:
OAK BROOK

SSC SITE NUMBER:
IL-00002

SITE ADDRESS:
100 OAK BROOK CENTER, STE. EV
OAK BROOK, IL 60523

SHEET DESCRIPTION:
EQUIPMENT DETAILS (4 OF 4)

SHEET #:
C-3.3

Docusign Envelope ID: 54931469-A40F-46BD-84C4-27E801AD8D1A

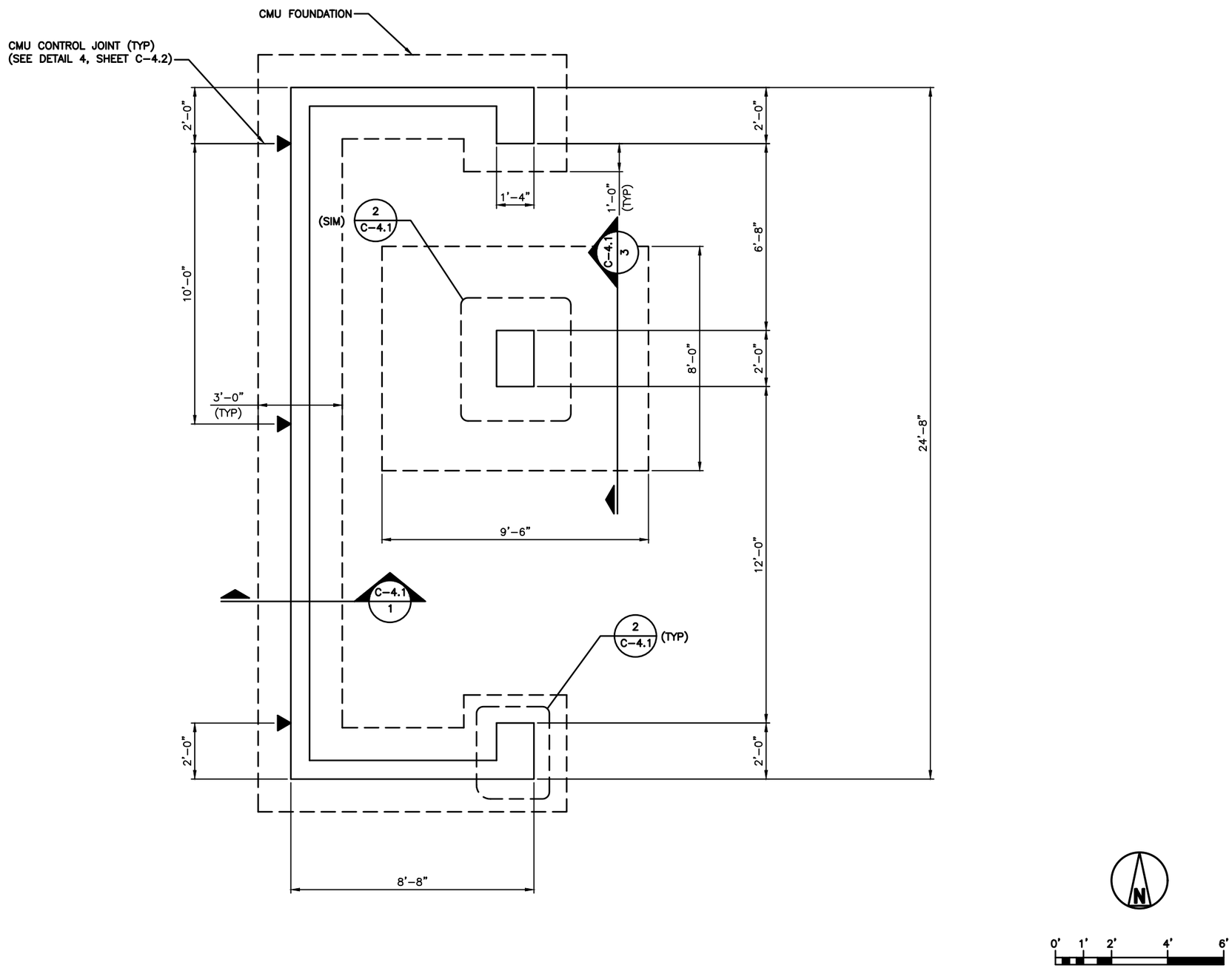

FOUNDATION/WALL PLAN

1

STAMP:

8/30/2024

LICENSED PROFESSIONAL ENGINEER
SHELTON D. KEISLING
062.069129
OF ILLINOIS

Docusigned by:
Shelton Keisling
EF94D8A5B80B407...

ENGINEERING LICENSE:

STATE OF ILLINOIS

PE CERTIFICATE OF AUTHORIZATION # 184.003404

ENGINEER:		PE#:	DISCIPLINE:
SDK	SHELTON D. KEISLING	062-069129	ELECTRICAL
TMS	TERRANCE M. SUPER	062-052514	ELECTRICAL

PLANS PREPARED FOR:

RIVIAN

PLANS PREPARED BY:

SSC

DRAWING NOTICE:

THIS DRAWING HAS NOT BEEN PUBLISHED AND IS THE SOLE PROPERTY OF SSC, INC. AND IS LENT TO THE BORROWER FOR THEIR CONFIDENTIAL USE ONLY, AND IN CONSIDERATION OF THE LOAN OF THIS DRAWING, THE BORROWER PROMISES AND AGREES TO RETURN IT UPON REQUEST AND AGREES THAT IT WILL NOT BE REPRODUCED, COPIED, LENT OR OTHERWISE DISPOSED OF DIRECTLY OR INDIRECTLY, NOR USED FOR ANY PURPOSE OTHER THAN FOR WHICH IT IS FURNISHED.

SUBMITTALS:

DESCRIPTION	DATE	BY	REV
ISSUED FOR CONSTRUCTION	03/30/23	DWO	0
TRAILER STALL REVISED	04/11/23	TX	1
REVISED PER CLIENT COMMENTS	12/20/23	IBA	2
REVISED PER CLIENT COMMENTS	04/23/24	IBA	3
REVISED PER AHJ COMMENTS	08/30/24	IBA	4

APPLICANT SITE NAME:

OAK BROOK

SSC SITE NUMBER:

IL-00002

SITE ADDRESS:

100 OAK BROOK CENTER,
STE. EV
OAK BROOK, IL 60523

SHEET DESCRIPTION:

FOUNDATION/WALL PLAN

SHEET #:

C-4.0

Docusign Envelope ID: 54931469-A40F-46BD-84C4-27E801AD8D1A

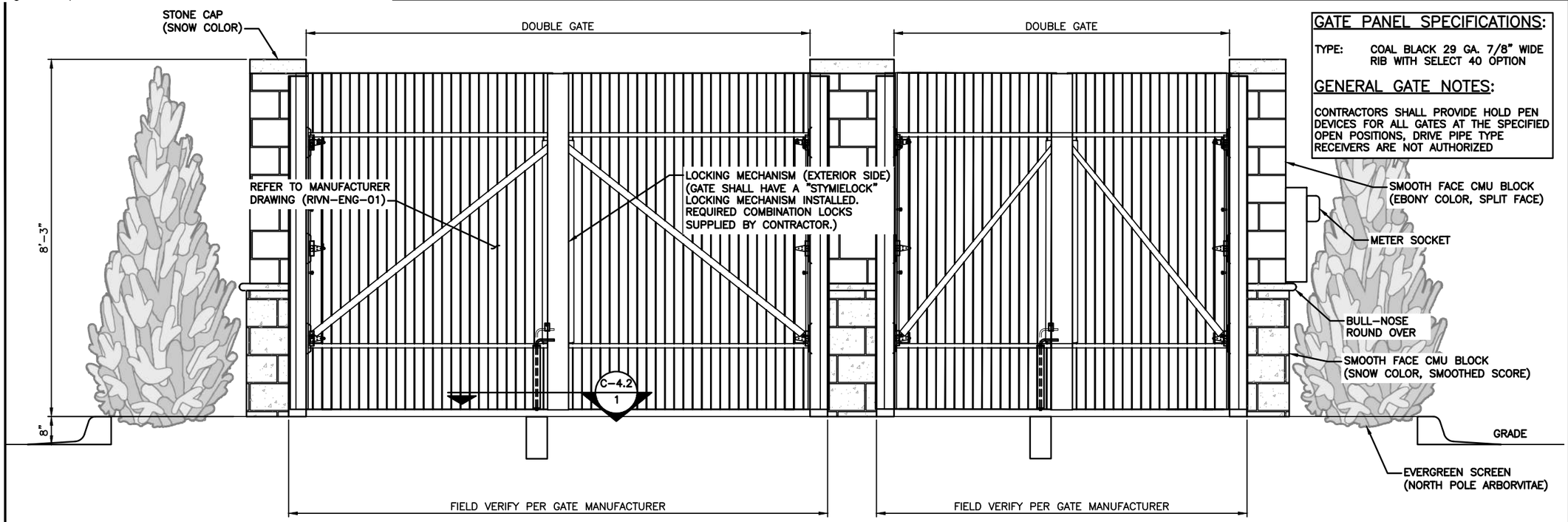

GATE PANEL SPECIFICATIONS:

TYPE: COAL BLACK 29 GA. 7/8" WIDE RIB WITH SELECT 40 OPTION

GENERAL GATE NOTES:

CONTRACTORS SHALL PROVIDE HOLD PEN DEVICES FOR ALL GATES AT THE SPECIFIED OPEN POSITIONS, DRIVE PIPE TYPE RECEIVERS ARE NOT AUTHORIZED

CMU WALL AND GATE ELEVATION | 1

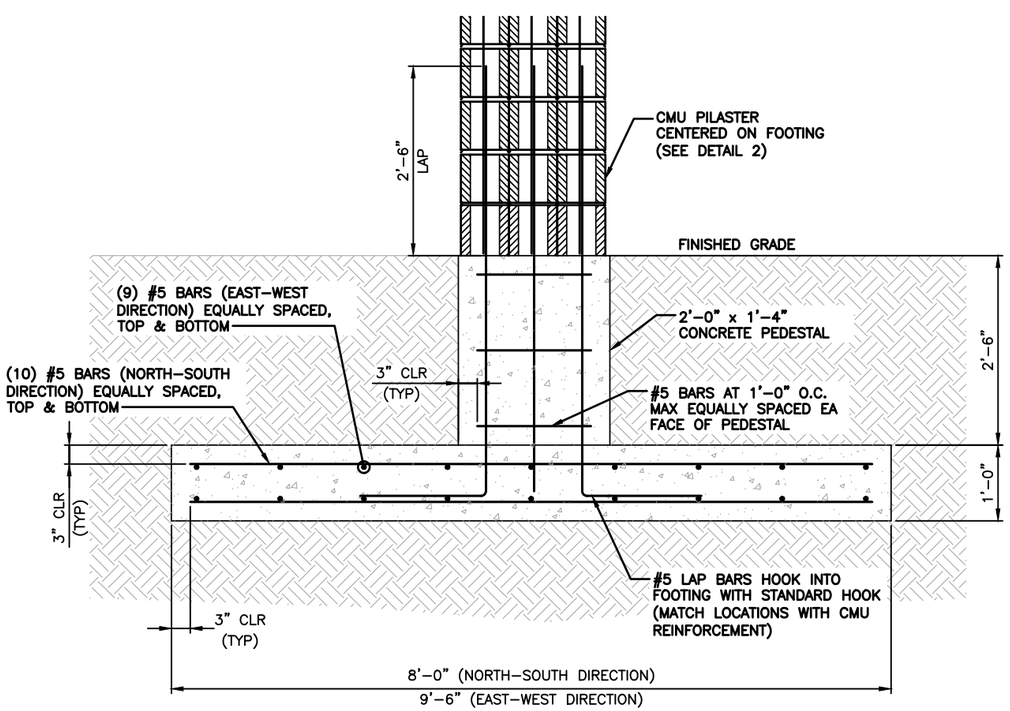

CENTRAL PILASTER FOUNDATION DETAIL | 3

NOTE:

CONTRACTOR SHALL INSTALL PERFECT VISION GATE POST AND CAP PER MANUFACTURER REQUIREMENTS (REFERENCE ATTACHING GATE TO PILLAR SPECIFICATIONS)

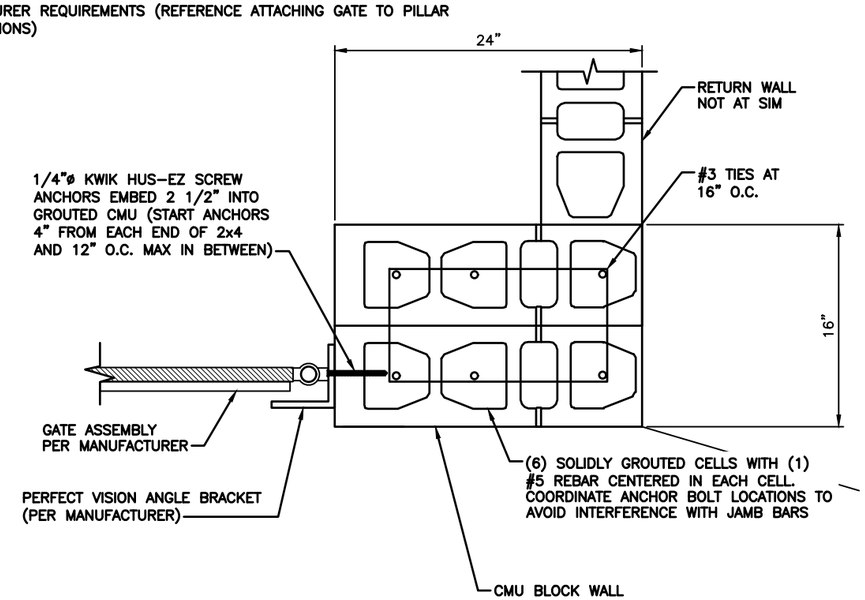

JAMB DETAIL | 2

STAMP:

8/30/2024

LICENSED PROFESSIONAL ENGINEER
SHELTON D. KEISLING
062.069129
OF ILLINOIS

Docusigned by:
Shelton Keisling
EF94D8A5B80B407...

ENGINEERING LICENSE:

STATE OF ILLINOIS

PE CERTIFICATE OF AUTHORIZATION # 184.003404

ENGINEER:		PE#:	DISCIPLINE:
SDK	SHELTON D. KEISLING	062-069129	ELECTRICAL
TMS	TERRANCE M. SUPER	062-052514	ELECTRICAL

PLANS PREPARED FOR:

RIVIAN

PLANS PREPARED BY:

SSC

DRAWING NOTICE:

THIS DRAWING HAS NOT BEEN PUBLISHED AND IS THE SOLE PROPERTY OF SSC, INC. AND IS LENT TO THE BORROWER FOR THEIR CONFIDENTIAL USE ONLY, AND IN CONSIDERATION OF THE LOAN OF THIS DRAWING, THE BORROWER PROMISES AND AGREES TO RETURN IT UPON REQUEST AND AGREES THAT IT WILL NOT BE REPRODUCED, COPIED, LENT OR OTHERWISE DISPOSED OF DIRECTLY OR INDIRECTLY, NOR USED FOR ANY PURPOSE OTHER THAN FOR WHICH IT IS FURNISHED.

SUBMITTALS:

DESCRIPTION	DATE	BY	REV
ISSUED FOR CONSTRUCTION	03/30/23	DWO	0
TRAILER STALL REVISED	04/11/23	TX	1
REVISED PER CLIENT COMMENTS	12/20/23	IBA	2
REVISED PER CLIENT COMMENTS	04/23/24	IBA	3
REVISED PER AHJ COMMENTS	08/30/24	IBA	4

APPLICANT SITE NAME:

OAK BROOK

SSC SITE NUMBER:

IL-00002

SITE ADDRESS:

100 OAK BROOK CENTER,
STE. EV
OAK BROOK, IL 60523

SHEET DESCRIPTION: BLOCK WALL DETAILS (1 OF 2)

SHEET #: C-4.1

Docusign Envelope ID: 54931469-A40F-46BD-84C4-27E801AD8D1A

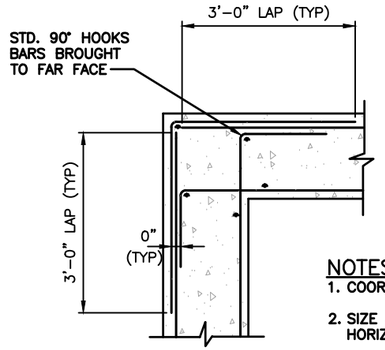

NOTES:
1. COORDINATE WITH SECTIONS AND DETAILS.
2. SIZE AND SPACING OF BARS TO MATCH HORIZONTAL WALL REINF.

FOUNDATION CORNER REINFORCING DETAIL | 5

MASONRY NOTES:

1. CONCRETE MASONRY UNITS SHALL CONFORM TO ASTM C90, TYPE 1 AND BE 8"Wx8"Hx16" LONG W/ 2 CELLS. MIN F'm = 1500 PSI.
2. MASONRY MORTAR SHALL CONFORM TO ASTM C270, TYPE S.
3. FILL ALL REINFORCING CELLS W/ 2000 PSI GROUT.
4. STEEL REBAR SHALL CONFORM TO ASTM A615 GRADE 60.
5. SPECIAL INSPECTIONS ARE REQUIRED FOR STRUCTURAL MASONRY.
6. LAP SPLICES IN MASONRY SHALL BE A MINIMUM OF 48 BAR DIAMETERS UNLESS NOTED OTHERWISE.

FOUNDATION GENERAL NOTES:

1. ALL FILL SAND SHALL BE 0–15 P.I. WITH A COMPACTION TEST RUN ON EACH 6" LIFT – COMPACTED TO 90% MODIFIED PROCTOR.
2. ANY SOFT AREAS (TREE STUMP HOLES, ETC.) SHALL BE CUT OUT AND RECOMPACTED TO SAID PROCTOR.
3. THE CONTRACTOR SHALL KEEP THE SITE SO IT WILL HAVE POSITIVE DRAINAGE AT ALL TIMES.
4. ALL EXCAVATIONS SHALL BE FREE OF WATER BEFORE PLACING CONCRETE.
5. DESIGN IS BASED ON ALLOWABLE SOIL BEARING CAPACITY OF 3000 PSF FOR CMU WALL FOUNDATION PER WANG ENGINEERING GEOTECHNICAL ENGINEERING REPORT (PROJECT NO. KE225304) DATED 02/03/23

CONCRETE NOTES:

1. ALL CONCRETE SHALL CONFORM TO THE SPECIFICATIONS FOR STRUCTURAL CONCRETE FOR BUILDING, ACI 301.
2. CONCRETE SHALL BE 3000 PSI (MINIMUM) NORMAL WEIGHT, WITH A SLUMP OF 3" TO 5".
   MAXIMUM AGGREGATE SIZE 1 1/2" (C33). OBTAIN CONCRETE FROM A REPUTABLE READY MIX SUPPLIER HAVING A SUITABLE TEST RECORD FOR THE MIX.
3. ALL REINFORCING SHALL BE HIGH STRENGTH DEFORMED BARS, GRADE 60, ASTM A615, WITH 60,000 PSI MINIMUM YIELD POINT.
4. REINFORCING PROTECTION: CONCRETE POURED AGAINST EARTH.... 3" U.N.O.
5. ALL BAR LENGTHS ARE NOT DRAWN TO SCALE. NO SPLICES OF REINFORCEMENT SHALL BE MADE EXCEPT AS DETAILED OR AS AUTHORIZED BY THE STRUCTURAL ENGINEER. LAP SPLICES, WHERE PERMITTED, SHALL BE A MINIMUM OF 40 BAR DIAMETERS UNLESS NOTED OTHERWISE.
6. DETAIL BARS IN ACCORDANCE WITH ACI DETAILING MANUAL & ACI BUILDING CODE REQUIREMENTS FOR REINFORCED CONCRETE.
7. PROVIDE ALL ACCESSORIES NECESSARY TO SUPPORT REINFORCING AT THE POSITIONS SHOWN ON THE PLANS.
8. CONCRETE SHALL BE PLACED BY CONCRETE PUMP, TREME, OR OTHER MEANS ACCEPTABLE TO THE ENGINEER TO PREVENT SEGREGATION AND TO PREVENT CONCRETE FROM HITTING SIDES OF EXCAVATION OR REINFORCING.

STRUCTURAL NOTES | 6

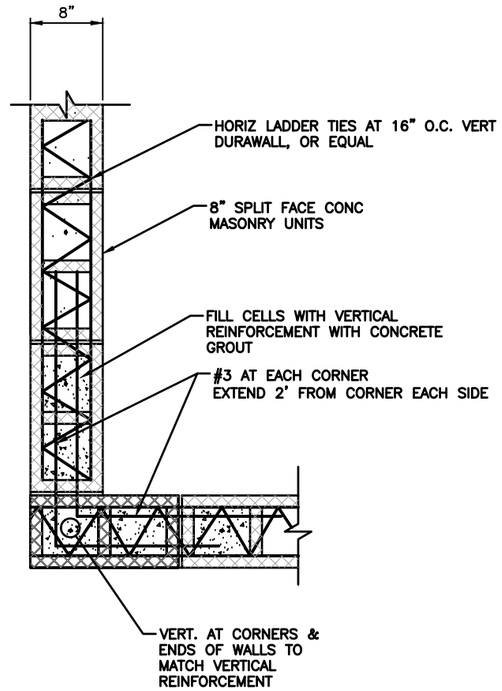

WALL CORNER REINFORCING DETAIL | 3

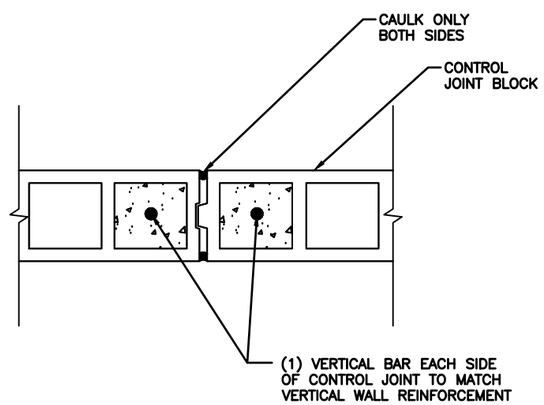

NOTES:

1. HORIZONTAL JOINT REINFORCING SHALL STOP AT CONTROL AND EXPANSION JOINTS. BOND BEAM REINFORCING AT TOP OF WALL SHALL BE CONTINUOUS THROUGH CONTROL JOINTS.
2. STRUCTURAL CONTRACT DRAWINGS SHALL BE REFERRED TO FOR LOCATIONS OF CONTROL JOINTS. CONTROL JOINTS SHOWN IN THE STRUCTURAL CONTRACT DRAWINGS ARE MANDATORY WHERE SHOWN. DO NOT ADD JOINTS THAT ARE NOT SHOWN IN THE STRUCTURAL CONTRACT DRAWINGS.
3. VERTICAL REINFORCING TO EXTEND CONTINUOUSLY THROUGH BOND BEAMS. LAP VERTICAL 48 DIAMETERS ABOVE BOND BEAMS.

CONTROL JOINT DETAIL | 4

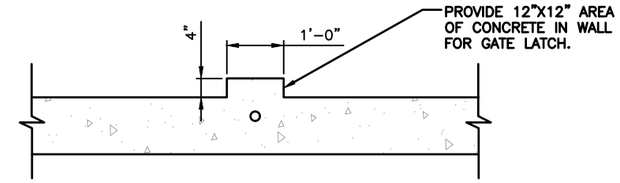

FOUNDATION GATE EXTENSION PLAN | 1

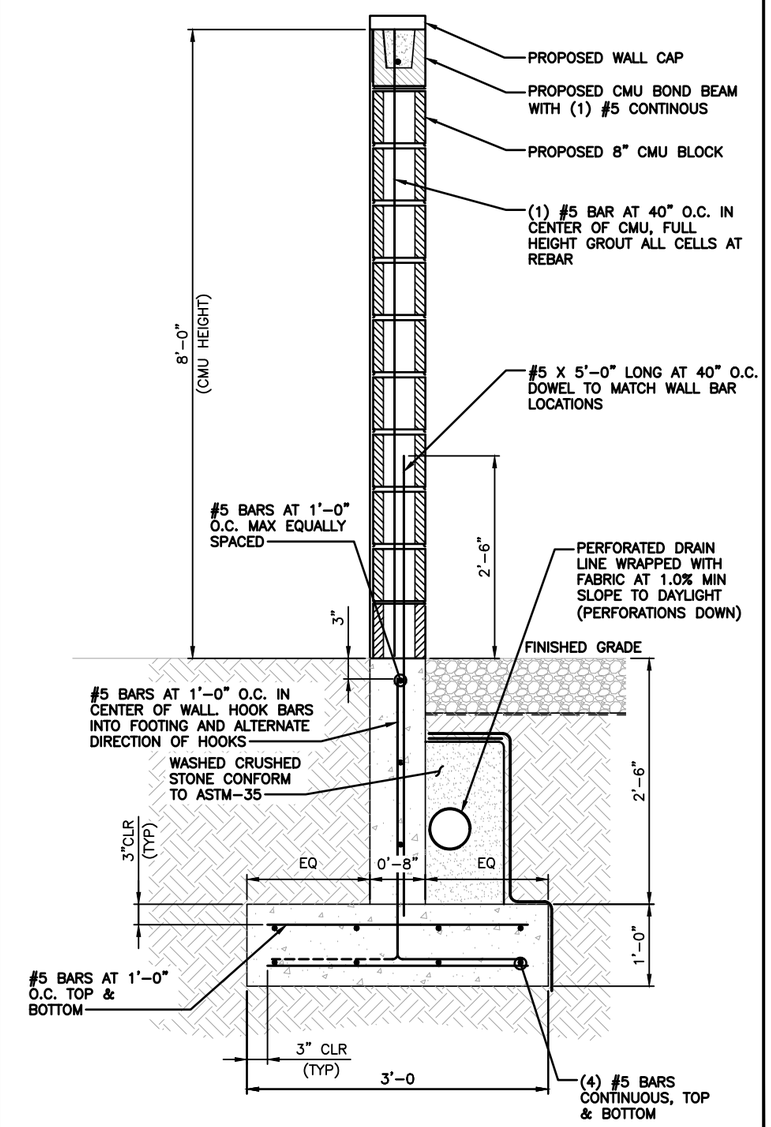

FOUNDATION AND WALL FOUNDATION DETAIL | 2

STAMP:
8/30/2024
LICENSED PROFESSIONAL ENGINEER
SHELTON D. KEISLING
062.069129
OF ILLINOIS
Docusigned by: Shelton Keisling
EF94D8A5B80B407...

ENGINEERING LICENSE:
STATE OF ILLINOIS
PE CERTIFICATE OF AUTHORIZATION # 184.003404

ENGINEER:		PE#:	DISCIPLINE:	
SDK	SHELTON D. KEISLING	062-069129	ELECTRICAL	E
TMS	TERRANCE M. SUPER	062-052514	ELECTRICAL	

PLANS PREPARED FOR:
RIVIAN

PLANS PREPARED BY:
SSC

DRAWING NOTICE:
THIS DRAWING HAS NOT BEEN PUBLISHED AND IS THE SOLE PROPERTY OF SSC, INC. AND IS LENT TO THE BORROWER FOR THEIR CONFIDENTIAL USE ONLY, AND IN CONSIDERATION OF THE LOAN OF THIS DRAWING, THE BORROWER PROMISES AND AGREES TO RETURN IT UPON REQUEST AND AGREES THAT IT WILL NOT BE REPRODUCED, COPIED, LENT OR OTHERWISE DISPOSED OF DIRECTLY OR INDIRECTLY, NOR USED FOR ANY PURPOSE OTHER THAN FOR WHICH IT IS FURNISHED.

SUBMITTALS:

DESCRIPTION	DATE	BY	REV
ISSUED FOR CONSTRUCTION	03/30/23	DWO	0
TRAILER STALL REVISED	04/11/23	TX	1
REVISED PER CLIENT COMMENTS	12/20/23	IBA	2
REVISED PER CLIENT COMMENTS	04/23/24	IBA	3
REVISED PER AHJ COMMENTS	08/30/24	IBA	4

APPLICANT SITE NAME:
OAK BROOK

SSC SITE NUMBER:
IL-00002

SITE ADDRESS:
100 OAK BROOK CENTER, STE. EV
OAK BROOK, IL 60523

SHEET DESCRIPTION:
BLOCK WALL DETAILS (2 OF 2)

SHEET #:
C-4.2

Docusign Envelope ID: 54931469-A40F-46BD-84C4-27E801AD8D1A

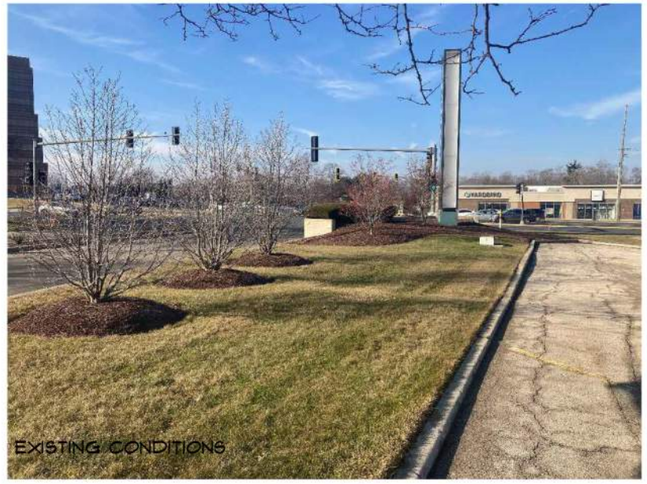

NOTE: ALL AREAS THAT ARE DISTURBED TO BE RESTORED BY LANDSCAPE CONTRACTOR TO INCLUDE TURF AND MULCH

SEE L2.0 FOR PLANTING PLAN

NOTE: CLEAN CUT ALL DISTURBED ROOT BEFORE BACKFILLING

3-EXT.12' CRABAPPLE

3-EXT.12' MAGNOLIA

EXT. 18" DBH. HONEY LOCUST

EXT.12' MAGNOLIA

EXT.12' MAGNOLIA

N.T.S.

LANDSCAPE PLAN AND DETAILS

1

STAMP:

REGISTERED LANDSCAPE ARCHITECT
KENNETH D. GALLT
157-000556
STATE OF ILLINOIS

ENGINEERING LICENSE:
STATE OF ILLINOIS
PE CERTIFICATE OF AUTHORIZATION # 184.003404

ENGINEER:		PE#:	DISCIPLINE:
SDK	SHELTON D. KEISLING	062-069129	ELECTRICAL
TMS	TERRANCE M. SUPER	062-052514	ELECTRICAL

FOLIAGE • DESIGN SYSTEMS
324 N. Eisenhower, Lombard, Illinois 60148
Landscape Architects/Contractors
Tel: 630-953-2683
www.foliagedesignsystems.com
Email: Chicago@fds.net.com

PLANS PREPARED FOR:
RIVIAN

PLANS PREPARED BY:
SSC

DRAWING NOTICE:
THIS DRAWING HAS NOT BEEN PUBLISHED AND IS THE SOLE PROPERTY OF SSC, INC. AND IS LENT TO THE BORROWER FOR THEIR CONFIDENTIAL USE ONLY, AND IN CONSIDERATION OF THE LOAN OF THIS DRAWING, THE BORROWER PROMISES AND AGREES TO RETURN IT UPON REQUEST AND AGREES THAT IT WILL NOT BE REPRODUCED, COPIED, LENT OR OTHERWISE DISPOSED OF DIRECTLY OR INDIRECTLY, NOR USED FOR ANY PURPOSE OTHER THAN FOR WHICH IT IS FURNISHED.

SUBMITTALS:

DESCRIPTION	DATE	BY	REV
ISSUED FOR CONSTRUCTION	03/30/23	DWO	0
TRAILER STALL REVISED	04/11/23	TX	1
REVISED PER CLIENT COMMENTS	12/20/23	IBA	2
REVISED PER CLIENT COMMENTS	04/23/24	IBA	3
REVISED PER AHJ COMMENTS	08/30/24	IBA	4

APPLICANT SITE NAME:
OAK BROOK

SSC SITE NUMBER:
IL-00002

SITE ADDRESS:
100 OAK BROOK CENTER, EV STE.
OAK BROOK, IL 60523

SHEET DESCRIPTION:
LANDSCAPE PLAN

SHEET #:
L-1.0

Docusign Envelope ID: 54931469-A40F-46BD-84C4-27E801AD8D1A

LANDSCAPE PLAN NOTES:

1. EXISTING UNDERGROUND (U/G), OVERHEAD (O.H.) UTILITIES AND DRAINAGE STRUCTURES HAVE BEEN PLOTTED FROM AVAILABLE INFORMATION AND THEREFORE, THEIR LOCATIONS MUST BE CONSIDERED APPROXIMATE ONLY. IT IS THE RESPONSIBILITY OF THE INDIVIDUAL CONTRACTORS TO VERIFY EXISTENCE AND LOCATION OF ALL UTILITIES BEFORE STARTING ANY WORK.
2. PRIOR TO COMMENCEMENT OF WORK, THE CONTRACTOR SHALL GIVE 72 HOURS ADVANCED NOTICE TO ALL THOSE COMPANIES/UTILITIES WHICH HAVE FACILITIES IN THE NEAR VICINITY OF THE CONSTRUCTION SITE. CONTRACTOR IS RESPONSIBLE FOR ENSURING THAT THE LIGHTING WIRE IS REPLACED OR REPAIRED, IF IT IS BROKEN.
3. CONTRACTOR SHALL VERIFY ALL LANDSCAPE MATERIAL QUANTITIES AND SHALL REPORT ANY DISCREPANCIES IMMEDIATELY TO THE LANDSCAPE ARCHITECT & OAK BROOK
4. CONTRACTOR SHALL STAKE/LAYOUT PLANT LOCATIONS IN THE FIELD & HAVE APPROVAL BY LANDSCAPE ARCHITECT BEFORE PROCEEDING WITH INSTALLATION.
5. NO SUBSTITUTIONS (INCL. CULTIVARS) SHALL BE ACCEPTED WITHOUT WRITTEN APPROVAL PER SPECIFICATIONS. PROPOSED PLANT SUBSTITUTIONS REQUIRE APPROVAL OF BOTH THE LANDSCAPE ARCHITECT AND OAK BROOK STAFF.
6. ALL PLANT MATERIAL SHALL BE OF EXCELLENT QUALITY, FREE OF DISEASE AND INFESTATION, AND TRUE TO TYPE, VARIETY, SIZE SPECIFIED, AND FORM PER AMERICAN NURSERY ASSOCIATION STANDARDS.
7. ALL PROPOSED TREES AND SHRUBS SHALL BE LAID OUT IN A UNIFORM AND CONSISTENT PATTERN, FOLLOWING THE LANDSCAPE PLAN ACCURATELY.
8. INSTALL ALL PLANTS PER PLANTING DETAILS.
9. ALL TREES AND MULCH BEDS SHALL RECEIVE 3" OF SHREDDED DARK PREMIUM HARDWOOD MULCH, AS DETAILED. ADD PREEN OR SNAPSHOT TO BEDS BEFORE AND AFTER MULCHING, UNLESS SPECIFIED AS ROCK OR OTHER.
10. CONTRACTOR SHALL THOROUGHLY WATER-IN EACH PLANT IMMEDIATELY FOLLOWING INSTALLATION AND CONTINUE WATERING UNTIL SUBSTANTIAL COMPLETION. COORDINATE WATERING WITH THE OWNER AFTER COMPLETION FOR THE FIRST 90 DAYS.
12. CONTRACTOR SHALL VERIFY ALL UTILITY LOCATIONS PRIOR TO PLANTING AND ANY MODIFICATIONS TO TREE LOCATIONS SHALL BE COORDINATED WITH THE LANDSCAPE ARCHITECT AND APPROVED BY CITY OF OAK BROOK PRIOR TO PLANTING.
13. ALL PLANT MATERIALS SHALL BE GUARANTEED FOR 1 YEAR FROM DATE OF SUBSTANTIAL COMPLETION. PLANT MATERIALS WILL BE ONE TIME REPLACEMENT AND SHALL BE DOCUMENTED BY THE CONTRACTOR AFTER ANY REPLACEMENTS.
14. ALL VEGETATION SHALL BE 6" ABOVE THE FINISHED GRADE OF THE UTILITY BOX AT THE TIME OF PLANTING.
15. SUGGESTED MAINTENANCE PROGRAM MINIMUMS FOR CONTRACTOR TO SUPPLY TO CLIENT. THE FOLLOWING SPECS ARE THE BARE MINIMUM REQUIREMENTS:
    A. MINIMUM VISITS 6
    B. SPRING CLEAN-UP TO INCLUDE TRIMMING OF PLANT MATERIAL, WEEDING, SNAPSHOT, AND FRESH PREMIUM HARDWOOD MULCH AT 2" THICK.
    C. FALL CLEAN-UP TO INCLUDE TRIMMING OF PLANT MATERIAL AS NEEDED, WEEDING, SNAPSHOT, AND LIGHT DRESSING OF PREMIUM HARDWOOD MULCH AT .5 – 1" DEPTH.
    D. 4 VISITS TO FALL BETWEEN SPRING AND FALL CLEAN-UP TO KEEP BEDS CLEAN OF WEEDS, AT LEAST 1 ADDITIONAL SNAPSHOT APPLICATION AND ALL DEBRIS.

UTILITY NOTES:

1. THE UTILITY LOCATIONS SHOWN ON THESE PLANS ARE TAKEN FROM UTILITY COMPANY RECORDS AND ARE APPROXIMATE ONLY. THEY DO NOT CONSTITUTE ACTUAL FIELD LOCATIONS. THE CONTRACTOR SHALL VERIFY THE LOCATION AND DEPTH OF ALL UTILITIES PRIOR TO CONSTRUCTION.
2. THE CONTRACTOR SHALL ADHERE TO THE PROVISIONS OF THE STATE OF IL. ANY PERSON OR FIRM DOING EXCAVATION ON PUBLIC RIGHT-OF-WAY DO SO ONLY AFTER GIVING NOTICE TO, AND OBTAINING INFORMATION FROM, UTILITY COMPANIES. STATE LAW REQUIRES 4 DAYS ADVANCE NOTICE.

INSTALLATION NOTES:

1. STRIP OFF ANY GRASS AND WEEDS PRIOR TO CREATING OR AMENDING BED AREAS.
2. INSTALL VEE CUT EDGING AROUND ALL BEDS. CAREFULLY HAND DIG OVER AND AROUND ANY LOCATED UTILITY LINES. EDGES SHALL BE SMOOTH AND CONFORM TO LANDSCAPE PLAN.
3. APPLY COTTON BUR COMPOST OR BACK TO NATURE MIX AT A RATE OF 1 BAG FOR EVERY 25 S.F. OF BED AREA (BAGS ARE 2 C.F.). LIGHTLY HAND SPADE. DO NOT ROTOTILL (FIBEROPTICS).
4. PLANT AT PROPER DEPTH AT FLARE ROOT. ROOTBALLS SHALL BE PLANTED 1" HIGHER THAN SURFACE.
5. EITHER INSTALL DEWITT PRO 5 WEED BARRIER WITH COMPANION PINS (PIN WELL) OR PRE-EMERGENT.
6. HARDWOOD MULCH SHALL EITHER MATCH EXISTING OR BE DARK BROWN HARDWOOD. 3" MIN. ALL AREAS.
7. INSTALL MULCH TO 3" DEPTH AROUND ANY INDIVIDUAL PLANTS IN A RING FOR NATURAL APPEARANCE.
8. DO NOT DISTURB ANY EXISTING TREES DURING INSTALLATION.

PLANT SCHEDULE

SYMBOL	CODE	BOTANICAL NAME	COMMON NAME	SIZE	CONTAINER	QTY
TREES						
	THU SMA	Thuja occidentalis `Smaragd`	Emerald Green Arborvitae	6`	B&B	14

NOTE: ALL AREAS THAT ARE DISTURBED TO BE RESTORED BY LANDSCAPE CONTRACTOR TO INCLUDE TURF AND MULCH

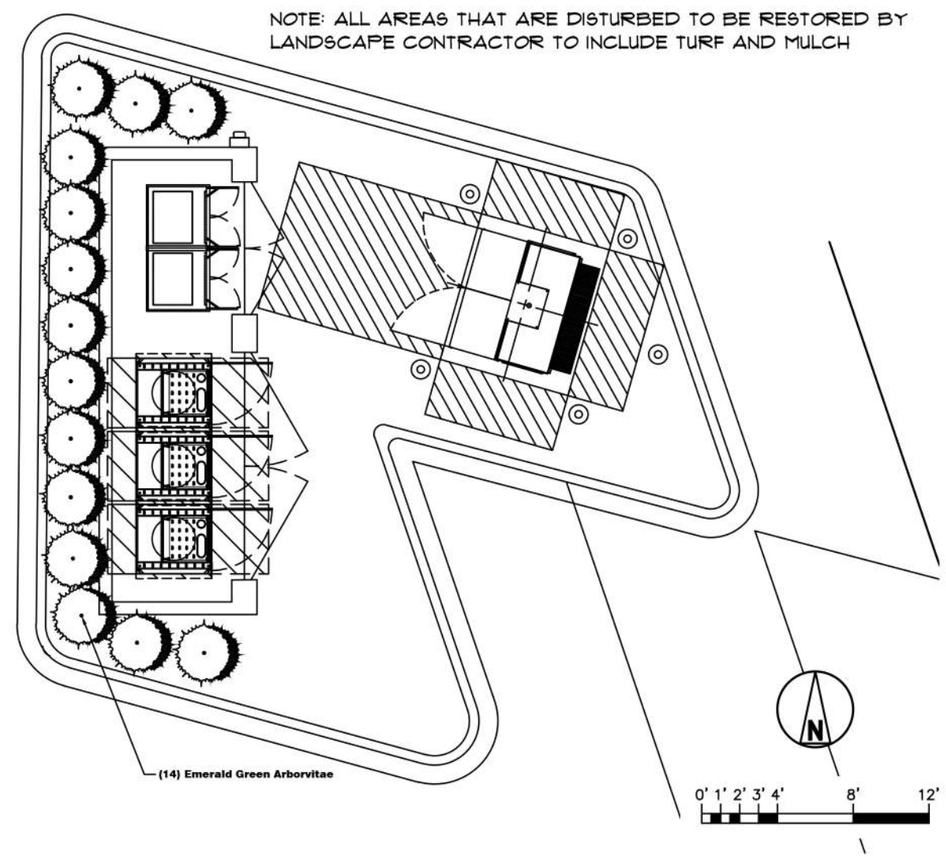

NOTE:
1. SET SHRUBS AT SAME GRADE AS GROWN IN NURSERY.
2. PRUNE ALL DAMAGED OR DEAD WOOD PRIOR TO PLANTING.

SHRUB PLANTING DETAIL & NOTES

811 Know what's below. Call before you dig. www.call811.com

STAMP:

REGISTERED LANDSCAPE ARCHITECT
KENNETH D. GALLT
157-000556
STATE OF ILLINOIS

ENGINEERING LICENSE:
STATE OF ILLINOIS
PE CERTIFICATE OF AUTHORIZATION # 184.003404

ENGINEER:		PE#:	DISCIPLINE:
SDK	SHELTON D. KEISLING	062-069129	ELECTRICAL
TMS	TERRANCE M. SUPER	062-052514	ELECTRICAL

FOLIAGE • DESIGN SYSTEMS
324 N. Elizabeth St., Lombard, Illinois 60148
Landscape Architects/Contractors
Tel: 630-953-2685
www.foliagedesignsystemchicago.com
Email: Chicagoil@aol.com

PLANS PREPARED FOR:
RIVIAN

PLANS PREPARED BY:
SSC

DRAWING NOTICE:
THIS DRAWING HAS NOT BEEN PUBLISHED AND IS THE SOLE PROPERTY OF SSC, INC. AND IS LENT TO THE BORROWER FOR THEIR CONFIDENTIAL USE ONLY, AND IN CONSIDERATION OF THE LOAN OF THIS DRAWING, THE BORROWER PROMISES AND AGREES TO RETURN IT UPON REQUEST AND AGREES THAT IT WILL NOT BE REPRODUCED, COPIED, LENT OR OTHERWISE DISPOSED OF DIRECTLY OR INDIRECTLY, NOR USED FOR ANY PURPOSE OTHER THAN FOR WHICH IT IS FURNISHED.

SUBMITTALS:

DESCRIPTION	DATE	BY	REV
ISSUED FOR CONSTRUCTION	03/30/23	DWO	0
TRAILER STALL REVISED	04/11/23	TX	1
REVISED PER CLIENT COMMENTS	12/20/23	IBA	2
REVISED PER CLIENT COMMENTS	04/23/24	IBA	3
REVISED PER AHJ COMMENTS	08/30/24	IBA	4

APPLICANT SITE NAME:
OAK BROOK

SSC SITE NUMBER:
IL-00002

SITE ADDRESS:
100 OAK BROOK CENTER, EV STE.
OAK BROOK, IL 60523

SHEET DESCRIPTION:
LANDSCAPE PLAN

SHEET #:
L-2.0

Docusign Envelope ID: 54931469-A40F-46BD-84C4-27E801AD8D1A

GENERAL NOTES:

1. RIVIAN CONTRACTOR TO REFERENCE DETAILS OF COMED ELECTRIC UTILITY DESIGN AND SPECIFICATIONS.
2. RIVIAN CONTRACTOR TO INSTALL ALL CONDUIT, CONDUCTOR, AND EQUIPMENT PAST THE CT'S.
3. RIVIAN CONTRACTOR TO REQUEST INSPECTION UPON COMPLETION OF ELECTRICAL CONSTRUCTION.
4. COMED WILL SET METER UPON PASSING INSPECTION.

SCOPE OF WORK:

1. COMED TO SET NEW POWER POLE, SPLITTING EXITING OHP.
2. COMED TO BORE ACROSS KINGERY HWY.
3. COMED TO RUN 6" CONDUIT FROM POWER POLE TO E SIDE OF KINGERY HWY ENDING WITH A SPLICE BOX. (APPROX LENGTH = 205'-0")
4. RIVIAN CONTRACTOR TO TRENCH/BORE 6" CONDUIT AND PULL STRING FROM SPLICE BOX TO TRANSFORMER PRIMARY WINDOW. (APPROX LENGTH = 180'-0")
5. COMED TO PROVIDE AND PULL CONDUCTOR FROM TRANSFORMER TO OHP.
6. RIVIAN CONTRACTOR TO PREPARE GROUND, PROVIDE AND SET PRECAST TRANSFORMER PAD.
7. COMED TO SET 1000 KVA TRANSFORMER.
8. RIVIAN CONTRACTOR TO TRENCH AND INSTALL SECONDARY CONDUIT AND CONDUCTOR FROM TRANSFORMER TO SWITCHBOARD.
9. RIVIAN TO INSTALL METER HOUSING ON ENCLOSURE AND CONSTRUCT CONDUIT AND WIRING RUN TO SWITCHBOARD.
10. RIVIAN CONTRACTOR TO INSTALL SWITCHBOARD.
11. COMED TO INSTALL CT'S WITHIN SWITCHBOARD.
12. COMED TO MAKE CONNECTIONS AT OHP, PRIMARY TRANSFORMER AND SECONDARY TRANSFORMER.

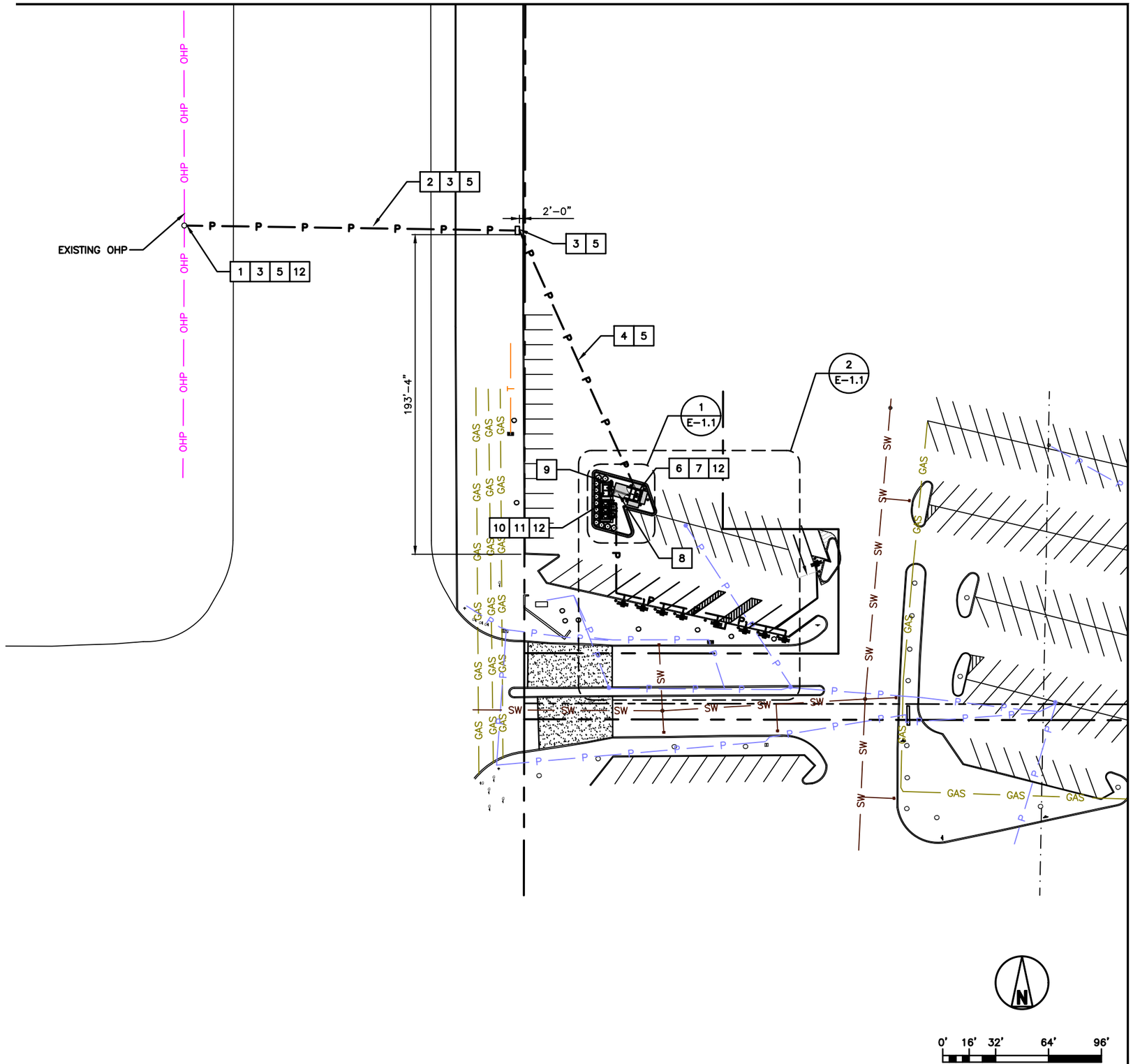

UTILITY PLAN | 1

STAMP:

8/30/2024

LICENSED PROFESSIONAL ENGINEER
SHELTON D. KEISLING
062.069129
OF ILLINOIS

Docusigned by:
Shelton Keisling
EF94D8A5B80B407...

ENGINEERING LICENSE:

STATE OF ILLINOIS
PE CERTIFICATE OF AUTHORIZATION # 184.003404

ENGINEER:		PE#:	DISCIPLINE:
SDK	SHELTON D. KEISLING	062-069129	ELECTRICAL
TMS	TERRANCE M. SUPER	062-052514	ELECTRICAL

PLANS PREPARED FOR:

RIVIAN

PLANS PREPARED BY:

SSC

DRAWING NOTICE:

THIS DRAWING HAS NOT BEEN PUBLISHED AND IS THE SOLE PROPERTY OF SSC, INC. AND IS LENT TO THE BORROWER FOR THEIR CONFIDENTIAL USE ONLY, AND IN CONSIDERATION OF THE LOAN OF THIS DRAWING, THE BORROWER PROMISES AND AGREES TO RETURN IT UPON REQUEST AND AGREES THAT IT WILL NOT BE REPRODUCED, COPIED, LENT OR OTHERWISE DISPOSED OF DIRECTLY OR INDIRECTLY, NOR USED FOR ANY PURPOSE OTHER THAN FOR WHICH IT IS FURNISHED.

SUBMITTALS:

DESCRIPTION	DATE	BY	REV
ISSUED FOR CONSTRUCTION	03/30/23	DWO	0
TRAILER STALL REVISED	04/11/23	TX	1
REVISED PER CLIENT COMMENTS	12/20/23	IBA	2
REVISED PER CLIENT COMMENTS	04/23/24	IBA	3
REVISED PER AHJ COMMENTS	08/30/24	IBA	4

APPLICANT SITE NAME:

OAK BROOK

SSC SITE NUMBER:

IL-00002

SITE ADDRESS:

100 OAK BROOK CENTER,
STE. EV
OAK BROOK, IL 60523

SHEET DESCRIPTION: UTILITY PLAN

SHEET #: E-1.0

Docusign Envelope ID: 54931469-A40F-46BD-84C4-27E801AD8D1A

NOTE:

CONTRACTOR TO REFERENCE CONSTRUCTION STANDARDS & UTILITY DESIGN OF COMED ELECTRIC.

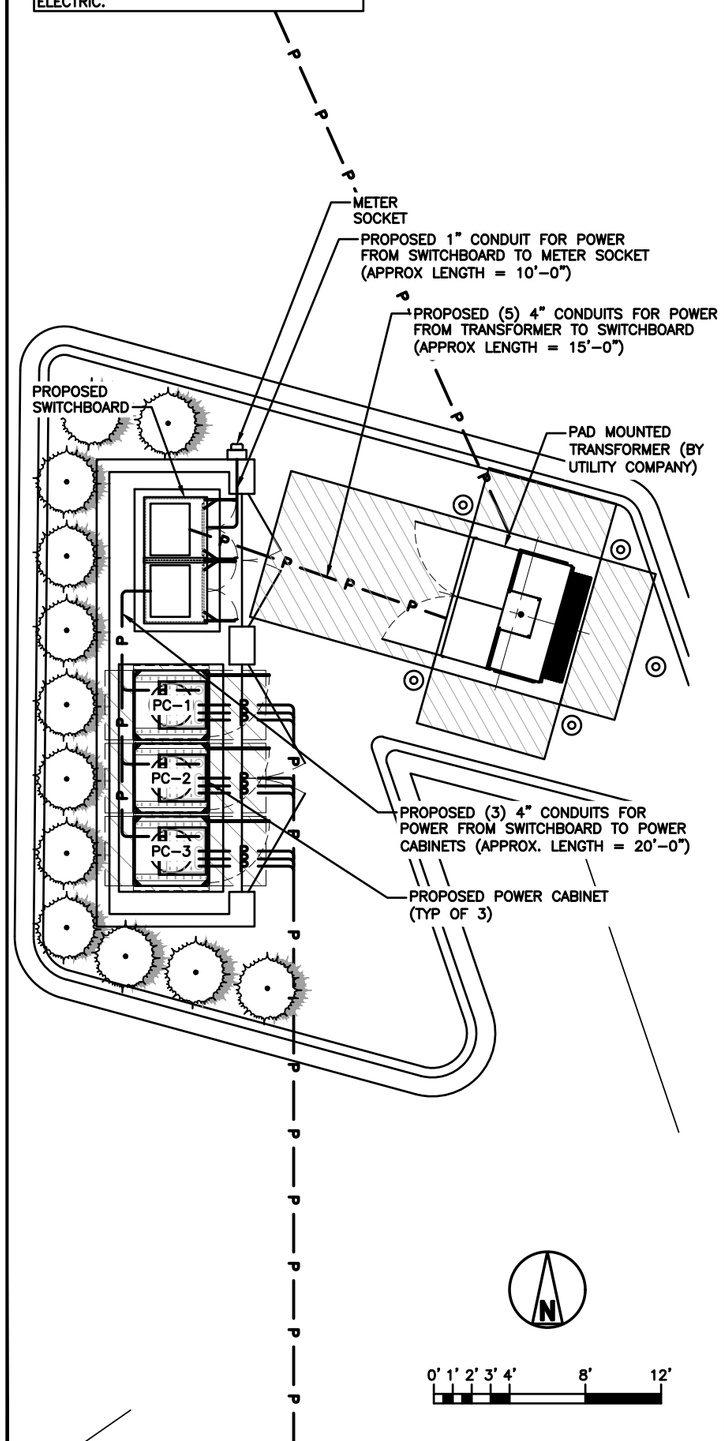

RIVIAN EQUIPMENT UTILITY PLAN | 1

PARKING STALL LEGEND

DESCRIPTION	SYMBOL
PROPOSED DCFC DISPENSER	#

NOTES:

1. CONTRACTOR TO CAP, BURY AND DOCUMENT PLACEMENT OF PROPOSED CONDUITS FOR FUTURE STALLS.
2. PROPOSED CONDUIT ROUTING IS SHOWN FOR ILLUSTRATIVE PURPOSES ONLY. CONTRACTOR TO ROUTE CONDUITS PER CODE AND FIELD CONDITIONS.

EVCS SCHEDULE

EVCS #	EVCS STALL TYPE	CHARGING LEVEL	DISPENSER	CONDUIT LENGTH(±)
1A	STANDARD	LEVEL 3	SINGLE	235'
1B	STANDARD	LEVEL 3	SINGLE	165'
1C	STANDARD	LEVEL 3	SINGLE	150'
2A	STANDARD	LEVEL 3	SINGLE	135'
2B	STANDARD	LEVEL 3	SINGLE	120'
2C	STANDARD	LEVEL 3	SINGLE	105'
3A	STANDARD	LEVEL 3	SINGLE	90'
3B	STANDARD	LEVEL 3	SINGLE	75'
3C	STANDARD	LEVEL 3	SINGLE	65'

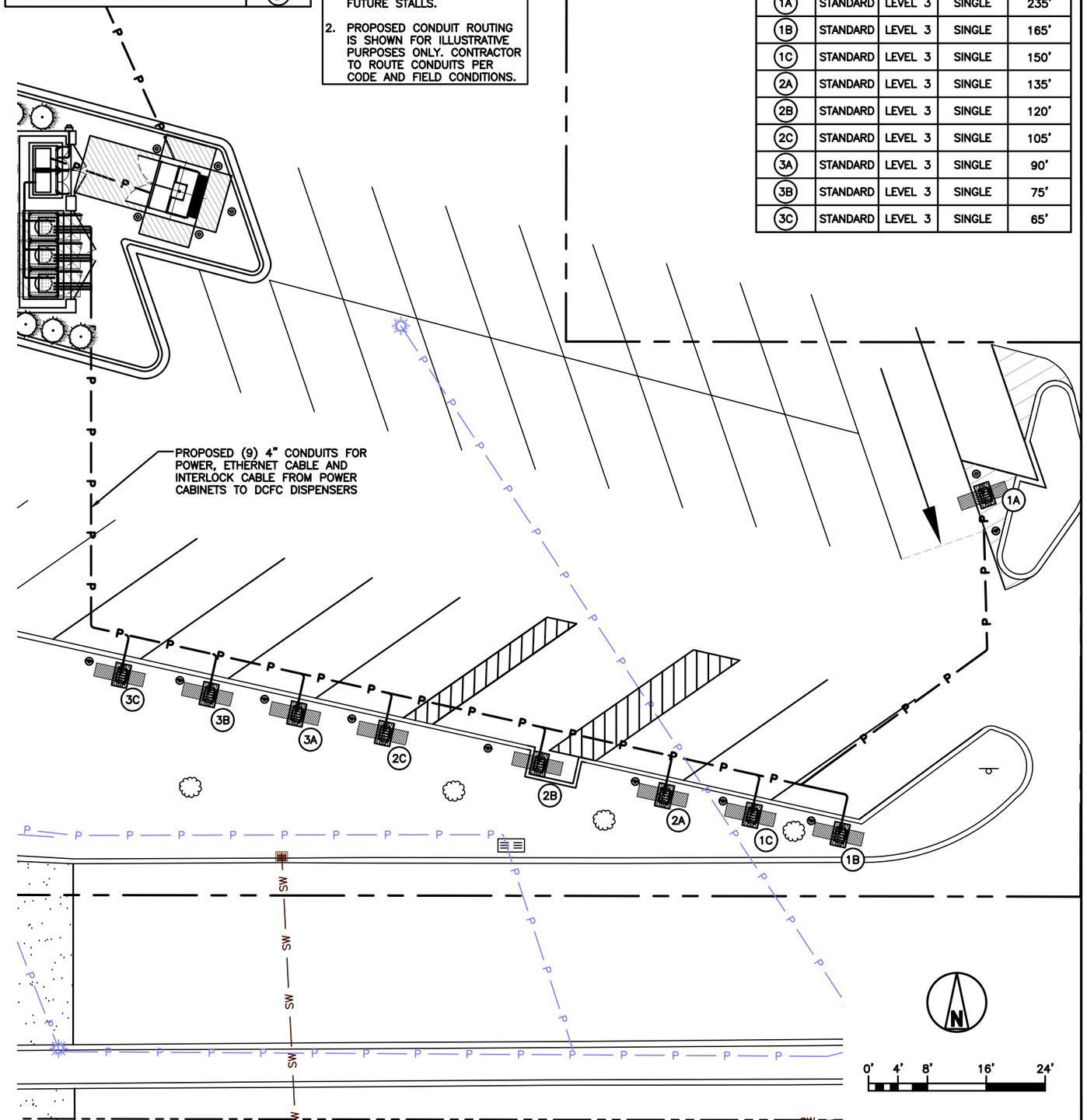

RIVIAN DISPENSER UTILITY PLAN | 2

STAMP:

8/30/2024

LICENSED PROFESSIONAL ENGINEER
SHELTON D. KEISLING
062.069129
OF ILLINOIS

Docusigned by:
Shelton Keisling
EF94D8A5B80B407...

ENGINEERING LICENSE:
STATE OF ILLINOIS
PE CERTIFICATE OF AUTHORIZATION # 184.003404

ENGINEER:		PE#:	DISCIPLINE:
SDK	SHELTON D. KEISLING	062-069129	ELECTRICAL
TMS	TERRANCE M. SUPER	062-052514	ELECTRICAL

PLANS PREPARED FOR:
RIVIAN

PLANS PREPARED BY:
SSC

DRAWING NOTICE:
THIS DRAWING HAS NOT BEEN PUBLISHED AND IS THE SOLE PROPERTY OF SSC, INC. AND IS LENT TO THE BORROWER FOR THEIR CONFIDENTIAL USE ONLY, AND IN CONSIDERATION OF THE LOAN OF THIS DRAWING, THE BORROWER PROMISES AND AGREES TO RETURN IT UPON REQUEST AND AGREES THAT IT WILL NOT BE REPRODUCED, COPIED, LENT OR OTHERWISE DISPOSED OF DIRECTLY OR INDIRECTLY, NOR USED FOR ANY PURPOSE OTHER THAN FOR WHICH IT IS FURNISHED.

SUBMITTALS:

DESCRIPTION	DATE	BY	REV
ISSUED FOR CONSTRUCTION	03/30/23	DWO	0
TRAILER STALL REVISED	04/11/23	TX	1
REVISED PER CLIENT COMMENTS	12/20/23	IBA	2
REVISED PER CLIENT COMMENTS	04/23/24	IBA	3
REVISED PER AHJ COMMENTS	08/30/24	IBA	4

APPLICANT SITE NAME:
OAK BROOK

SSC SITE NUMBER:
IL-00002

SITE ADDRESS:
100 OAK BROOK CENTER,
STE. EV
OAK BROOK, IL 60523

SHEET DESCRIPTION:
RIVIAN
UTILITY PLAN

SHEET #:
E-1.1

Docusign Envelope ID: 54931469-A40F-46BD-84C4-27E801AD8D1A

NOTE:

SEE ONE-LINE DIAGRAM ON SHEET E-2.1 FOR ADDITIONAL INFORMATION.

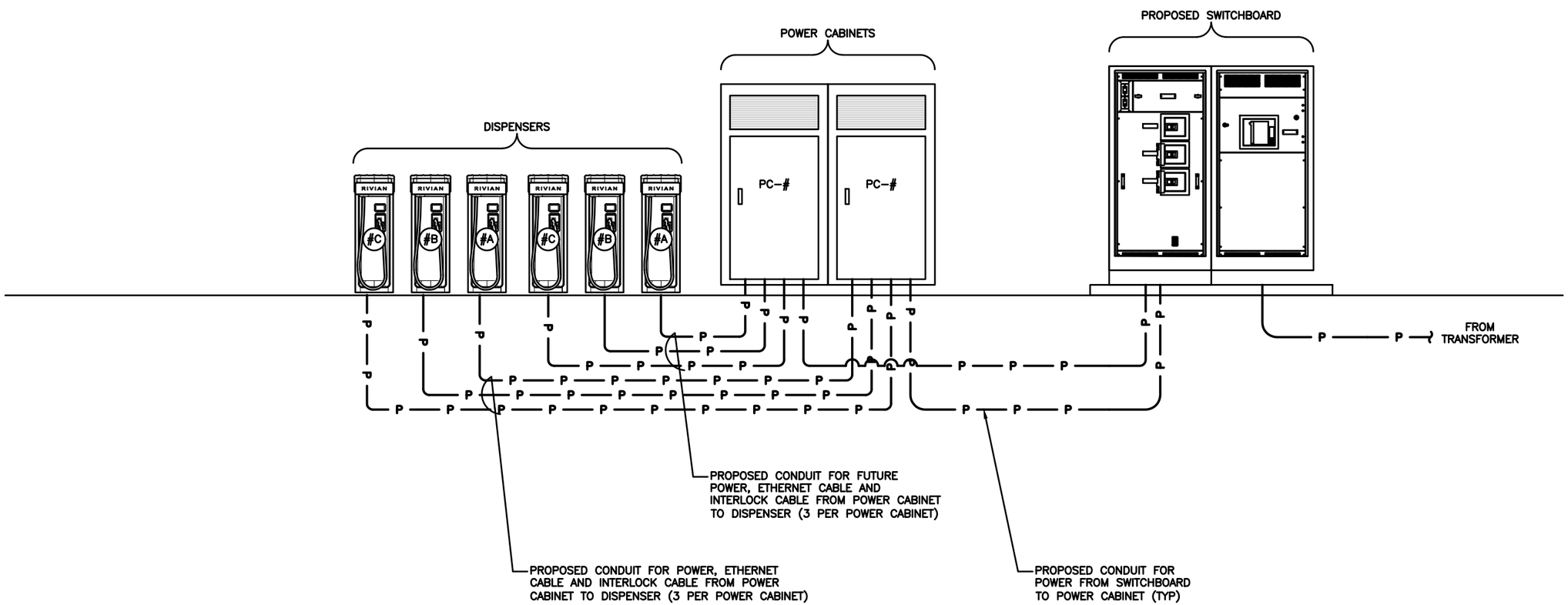

RIVIAN RISER DIAGRAM | 1

STAMP:

8/30/2024

LICENSED PROFESSIONAL ENGINEER
SHELTON D. KEISLING
062.069129
OF ILLINOIS

Docusigned by:
Shelton Keisling
EF94D8A5B80B407...

ENGINEERING LICENSE:

STATE OF ILLINOIS

PE CERTIFICATE OF AUTHORIZATION # 184.003404

ENGINEER:		PE#:	DISCIPLINE:	
SDK	SHELTON D. KEISLING	062-069129	ELECTRICAL	E
TMS	TERRANCE M. SUPER	062-052514	ELECTRICAL	E

PLANS PREPARED FOR:

RIVIAN

PLANS PREPARED BY:

SSC

DRAWING NOTICE:

THIS DRAWING HAS NOT BEEN PUBLISHED AND IS THE SOLE PROPERTY OF SSC, INC. AND IS LENT TO THE BORROWER FOR THEIR CONFIDENTIAL USE ONLY, AND IN CONSIDERATION OF THE LOAN OF THIS DRAWING, THE BORROWER PROMISES AND AGREES TO RETURN IT UPON REQUEST AND AGREES THAT IT WILL NOT BE REPRODUCED, COPIED, LENT OR OTHERWISE DISPOSED OF DIRECTLY OR INDIRECTLY, NOR USED FOR ANY PURPOSE OTHER THAN FOR WHICH IT IS FURNISHED.

SUBMITTALS:

DESCRIPTION	DATE	BY	REV
ISSUED FOR CONSTRUCTION	03/30/23	DWO	0
TRAILER STALL REVISED	04/11/23	TX	1
REVISED PER CLIENT COMMENTS	12/20/23	IBA	2
REVISED PER CLIENT COMMENTS	04/23/24	IBA	3
REVISED PER AHJ COMMENTS	08/30/24	IBA	4

APPLICANT SITE NAME:

OAK BROOK

SSC SITE NUMBER:

IL-00002

SITE ADDRESS:

100 OAK BROOK CENTER,
STE. EV
OAK BROOK, IL 60523

SHEET DESCRIPTION:

RIVIAN RISER DIAGRAM

SHEET #:

E-2.0

Docusign Envelope ID: 54931469-A40F-46BD-84C4-27E801AD8D1A

GENERAL NOTES:

1. PROPOSED UTILITY CT'S SHALL BE LOCATED IN UTILITY APPROVED CT COMPARTMENTS MOUNTED IN SWITCHBOARD. PROPOSED METER SHALL BE MOUNTED ON CMU ENCLOSURE.
2. WIRE AND CABLE SHALL BE 1000V, XLPE TYPE XHHW-2, UNLESS OTHERWISE INDICATED
3. ALL ALUMINUM CONDUCTORS SHALL BE TREATED WITH AN ANTI-OXIDATIVE COATING DURING INSTALLATION. ALL OTHER CONDUCTORS SHALL BE COPPER UNLESS NOTED OTHERWISE.
4. ALL CONDUITS ACCESSIBLE TO THE GENERAL PUBLIC OR WHICH ARE SUSCEPTIBLE TO CAN BE DAMAGE SHALL BE RIGID GALVANIZED STEEL.
5. ALL ELECTRICAL EQUIPMENT SHALL BE LABELED, LISTED, OR CERTIFIED BY A NATIONALLY RECOGNIZED TESTING LABORATORY ACCREDITED BY THE UNITED STATES OCCUPATIONAL SAFETY HEALTH ADMINISTRATION.
6. THE AFOREMENTIONED STANDARDS IDENTIFY THE REQUIREMENTS MET BY THE EQUIPMENT, INCLUDING BUT NOT LIMITED TO:

- PROTECTION AGAINST ELECTRIC SHOCK
- OVERLOAD AND SHORT CIRCUIT PROTECTION
- FAULT PROTECTION
- DEGREES OF PROTECTION AGAINST ACCESS TO HAZARDOUS LIVE PARTS.
- INTERLOCK THAT DE-ENERGIZES THE ELECTRIC VEHICLE CONNECTOR WHENEVER THE ELECTRICAL CONNECTOR IS UNCOUPLED FROM THE ELECTRIC VEHICLE.
- AUTOMATIC DE-ENERGIZATION OF CHARGING POST CABLE UPON EXPOSURE TO STRAIN.

NO.	FROM	TO	CONFIGURATION	FUNCTION
1	SOURCE	TRANSFORMER	(BY UTILITY COMPANY)	PRIMARY
2	TRANSFORMER	SWITCHBOARD	(5) SETS OF 4-600 KCMIL ALUMINUM, EACH IN 4" PVC CONDUIT	SERVICE LATERAL
3	SWITCHBOARD	POWER CABINET	(2) SETS OF 3-500 KCMIL AL, 1#1 COPPER GND, 4" PVC CONDUIT	POWER FEEDER TO POWER CABINETS
4	POWER CABINET	DISPENSER	4-500 KCMIL AL, 1#2/0G CU, 2#12 CU, (1) RJ45 BASE100-T ETHERNET CABLE (SEE NOTE 1), AND 2#14 CU INTERLOCK WIRE IN 4" PVC CONDUIT	DC POWER FEEDER, COMMUNICATIONS CABLE, INTERLOCK CABLE, AND POWER CABLE TO DISPENSERS

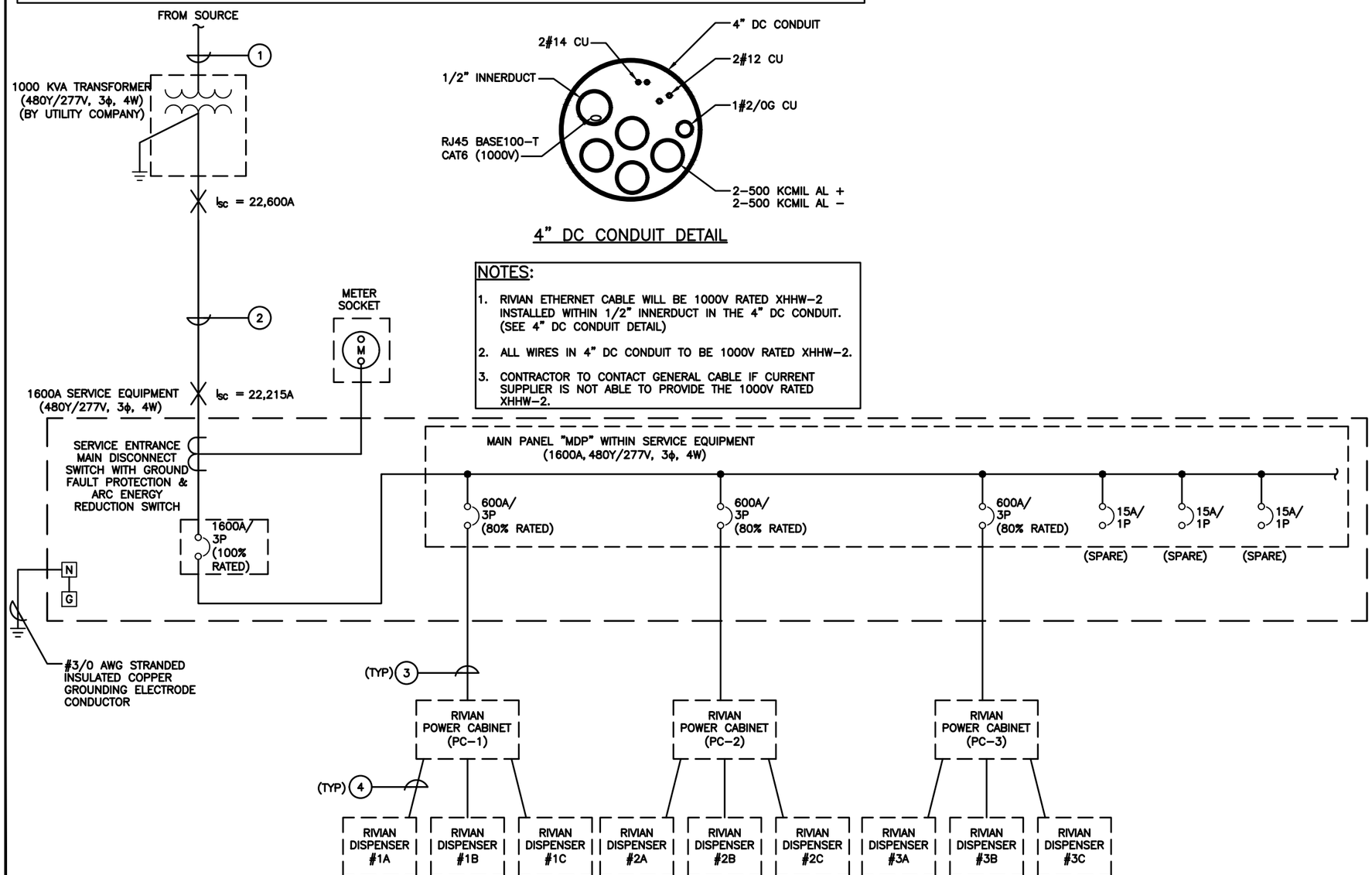

NOTES:

1. RIVIAN ETHERNET CABLE WILL BE 1000V RATED XHHW-2 INSTALLED WITHIN 1/2" INNERDUCT IN THE 4" DC CONDUIT. (SEE 4" DC CONDUIT DETAIL)
2. ALL WIRES IN 4" DC CONDUIT TO BE 1000V RATED XHHW-2.
3. CONTRACTOR TO CONTACT GENERAL CABLE IF CURRENT SUPPLIER IS NOT ABLE TO PROVIDE THE 1000V RATED XHHW-2.

ELECTRICAL ONE-LINE DIAGRAM

1

STAMP:

8/30/2024

LICENSED PROFESSIONAL ENGINEER
SHELTON D. KEISLING
062.069129
OF ILLINOIS

Docusigned by:
Shelton Keisling
EF94D8A5B80B407...

ENGINEERING LICENSE:
STATE OF ILLINOIS
PE CERTIFICATE OF AUTHORIZATION # 184.003404

ENGINEER:		PE#:	DISCIPLINE:	
SDK	SHELTON D. KEISLING	062-069129	ELECTRICAL	E
TMS	TERRANCE M. SUPER	062-052514	ELECTRICAL	E

PLANS PREPARED FOR:

RIVIAN

PLANS PREPARED BY:

SSC

DRAWING NOTICE:
THIS DRAWING HAS NOT BEEN PUBLISHED AND IS THE SOLE PROPERTY OF SSC, INC. AND IS LENT TO THE BORROWER FOR THEIR CONFIDENTIAL USE ONLY, AND IN CONSIDERATION OF THE LOAN OF THIS DRAWING, THE BORROWER PROMISES AND AGREES TO RETURN IT UPON REQUEST AND AGREES THAT IT WILL NOT BE REPRODUCED, COPIED, LENT OR OTHERWISE DISPOSED OF DIRECTLY OR INDIRECTLY, NOR USED FOR ANY PURPOSE OTHER THAN FOR WHICH IT IS FURNISHED.

SUBMITTALS:

DESCRIPTION	DATE	BY	REV
ISSUED FOR CONSTRUCTION	03/30/23	DWO	0
TRAILER STALL REVISED	04/11/23	TX	1
REVISED PER CLIENT COMMENTS	12/20/23	IBA	2
REVISED PER CLIENT COMMENTS	04/23/24	IBA	3
REVISED PER AHJ COMMENTS	08/30/24	IBA	4

APPLICANT SITE NAME:
OAK BROOK

SSC SITE NUMBER:
IL-00002

SITE ADDRESS:
100 OAK BROOK CENTER,
STE. EV
OAK BROOK, IL 60523

SHEET DESCRIPTION:
ELECTRICAL ONE-LINE DIAGRAM

SHEET #:
E-2.1

Docusign Envelope ID: 54931469-A40F-46BD-84C4-27E801AD8D1A

PANELBOARD NOTES:

1. PANELBOARD IS LOCATED WITHIN PROPOSED SERVICE EQUIPMENT AND IS PROVIDED AND INSTALLED BY MANUFACTURER.
2. PROVIDE EQUIPMENT WITH SUFFICIENT INTERRUPTING CAPACITY (AIC) REQUIRED FOR A SAFE INSTALLATION. AIC RATING NOTED ON EACH PANELBOARD SCHEDULE IS MINIMUM RATING ACCEPTED WITHOUT ADDITIONAL DOCUMENTATION THAT INDICATES OTHERWISE.
3. CIRCUITS SHALL BE REARRANGED AS REQUIRED TO MAINTAIN THE MOST BALANCED LOADS ON EACH PHASE WITHIN EACH PANEL. PROVIDE TYPED PANEL DIRECTORY MOUNTED PER MANUFACTURER'S RECOMMENDATIONS.

PANEL "MDP"

DESCRIPTION	PHASE A KW	PHASE B KW	PHASE C KW	CKT BKR/ POLES
RIVIAN POWER CABINET	124.15			600A/3P
		124.15		
			124.15	
RIVIAN POWER CABINET	124.15			600A/3P
		124.15		
			124.15	
SPACE				
SPACE				
	248.30	248.30	248.30	
** CONNECTED				
KW	372.65	372.65	372.65	
AMPS	1345	1345	1345	
TOTAL KW	1117.95			
TOTAL AMPS	1345			

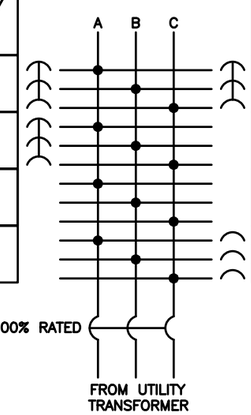

CKT BKR/ POLES	PHASE A KW	PHASE B KW	PHASE C KW	DESCRIPTION
600A/3P	124.15			RIVIAN POWER CABINET
		124.15		
			124.15	
				SPACE
				SPACE
15A/1P	0.20			SPARE
15A/1P		0.20		SPARE
15A/1P			0.20	SPARE
	124.35	124.35	124.35	

SPECIFICATIONS: SERVICE ENTRANCE RATED 1600A BUS, 65 KAIC, 100% RATED MCB, NEMA 3R ENCLOSURE

** THE SUM OF THE TOTAL CONNECTED LOADS (NONCONTINUOUS LOAD PLUS THE CONTINUOUS LOAD) TERMINATE IN AN OVERCURRENT DEVICE WHERE BOTH THE OVERCURRENT DEVICE AND ITS ASSEMBLY ARE LISTED FOR OPERATION AT 100% OF THEIR RATING.

PANEL SCHEDULE | 1

STAMP:

8/30/2024

LICENSED PROFESSIONAL ENGINEER
SHELTON D. KEISLING
062.069129
OF ILLINOIS

Docusigned by:
Shelton Keisling
EF94D8A5B80B407...

ENGINEERING LICENSE:
STATE OF ILLINOIS
PE CERTIFICATE OF AUTHORIZATION # 184.003404

ENGINEER:		PE#:	DISCIPLINE:	
SDK	SHELTON D. KEISLING	062-069129	ELECTRICAL	E
TMS	TERRANCE M. SUPER	062-052514	ELECTRICAL	E

PLANS PREPARED FOR:
RIVIAN

PLANS PREPARED BY:
SSC

DRAWING NOTICE:
THIS DRAWING HAS NOT BEEN PUBLISHED AND IS THE SOLE PROPERTY OF SSC, INC. AND IS LENT TO THE BORROWER FOR THEIR CONFIDENTIAL USE ONLY; AND IN CONSIDERATION OF THE LOAN OF THIS DRAWING, THE BORROWER PROMISES AND AGREES TO RETURN IT UPON REQUEST AND AGREES THAT IT WILL NOT BE REPRODUCED, COPIED, LENT OR OTHERWISE DISPOSED OF DIRECTLY OR INDIRECTLY, NOR USED FOR ANY PURPOSE OTHER THAN FOR WHICH IT IS FURNISHED.

SUBMITTALS:

DESCRIPTION	DATE	BY	REV
ISSUED FOR CONSTRUCTION	03/30/23	DWO	0
TRAILER STALL REVISED	04/11/23	TX	1
REVISED PER CLIENT COMMENTS	12/20/23	IBA	2
REVISED PER CLIENT COMMENTS	04/23/24	IBA	3
REVISED PER AHJ COMMENTS	08/30/24	IBA	4

APPLICANT SITE NAME:
OAK BROOK

SSC SITE NUMBER:
IL-00002

SITE ADDRESS:
100 OAK BROOK CENTER,
STE. EV
OAK BROOK, IL 60523

SHEET DESCRIPTION:
PANEL SCHEDULE

SHEET #:
E-2.2

Docusign Envelope ID: 54931469-A40F-46BD-84C4-27E801AD8D1A

RIVIAN
100 OAK BROOK CENTER
SUITE EV

NOTES:

1. PLACE LABEL IN A VISIBILE LOCATION: SWITCHBOARD (METER COMPARTMENT)
2. RED BACKGROUND, WHITE LETTERING
3. TEXT: MIN. 3/8" AND 1/8" HEIGHT. ALL CAPITAL LETTERS ARIAL OR SIMILAR FONT, NON BOLD
4. MATERIAL NOTE: ENGRAVED ON OUTDOOR–RATED PLASTIC LAMINATE WITH ADHESIVE BACKING SUITABLE FOR THE ENVIRONMENT

METER LABEL | 1

RIVIAN EV SYSTEM DISCONNECT

NOTES:

1. PLACE LABEL IN A VISIBILE LOCATION: SWITCHBOARD
2. RED BACKGROUND, WHITE LETTERING
3. TEXT: MIN. 3/8" AND 1/8" HEIGHT. ALL CAPITAL LETTERS ARIAL OR SIMILAR FONT, NON BOLD
4. MATERIAL NOTE: ENGRAVED ON OUTDOOR–RATED PLASTIC LAMINATE WITH ADHESIVE BACKING SUITABLE FOR THE ENVIRONMENT
5. APPLICABLE NEC SECTIONS: NEC 110.22

MAIN CIRCUIT BREAKER LABEL | 2

EQUIPMENT ID

POWER SUPPLIED FROM SOURCE OF POWER

NOTES:

1. PLACE LABEL IN A VISIBILE LOCATION: POWER CABINETS, SWITCHBOARDS, PANELS, AND METERING ENCLOSURERS.
2. BLACK BACKGROUND, WHITE LETTERING
3. TEXT: MIN. 1/2" HEIGHT. ALL CAPITAL LETTERS ARIAL OR SIMILAR FONT, NON BOLD
4. MATERIAL NOTE: ENGRAVED ON OUTDOOR–RATED PLASTIC LAMINATE WITH ADHESIVE BACKING SUITABLE FOR THE ENVIRONMENT
5. APPLICABLE NEC SECTIONS: NEC 408.4(8)

EQUIPMENT IDENTIFICATION LABEL | 3

DANGER!

ARC FLASH AND SHOCK HAZARD PRESNET
APPROPRIATE PPE REQUIRED

ARC FLASH BOUNDARY [XX] ft
INCIDENT ENERGY [X.XX] cal/cm²
WORKING DISTANCE [XX] in

SHOCK HAZARD EXPOSURE [XX]VAC
INSULATING GLOVE CLASS [XX]
SHOCK HAZARD WHEN COVERS REMOVED LIMITED
APPROACH BOUNDARY [X.X]ft
RESTRICTED APPROACH BOUNDARY [XX]ft
EQUIPMENT: [EQUIPMENT ID]

MIN. PPE REQUIREMENTS
[DESCRIPTION]
[DESCRIPTION]
[DESCRIPTION]
[DESCRIPTION]
[DESCRIPTION]

CHANGES IN EQUIPMENT SETTINGS OR SYSTEM CONFIGURATIONS WILL INVALIDATE THE CALCULATED VALUES AND PPE

REQUIREMENTS WHICH MAY RESULT IN A HAZARDOUS CONDITION.

NOTES:

1. "TYPICAL LABEL SHOWN, ARC FLASH LABELS TO BE PROVIDED FOR ALL ELECTRICAL EQUIPMENT INCLUDING, SWITCHBOARD, PANELBOARDS, AND CHARGING CABINETS.
2. 4"x4" LABEL MAY BE USED AN AN ALTERNATE
3. "WARNING" HEADING FOR INCIDENT ENERGY < 40 CAL/CM²
   "WARNING" HEADING FOR INCIDENT ENERGY > 40 CAL/CM²
4. VALUES IN BRACKETS WILL BE UPDATED ACCORDING TO THE RESULTS OF THE ARC FLASH HAZARD ANALYSIS.
5. PLACE LAVEL ON EQUIPMENT DESIGNATED IN THE ARC FLASH HAZARD ANALYSIS
6. LABELS SHALL BE PROVIDED IN PDF FORMAT TO CONTRACTOR
7. MATERIAL: WEATHER AND UV RESISTANT VINYL WITH DURABLE ADHESIVE SUITABLE FOR THE ENVIROMENT.
8. APPLICABLE NEC SECTIONS: NEC 110.16

ARC FLASH HAZARD LABEL | 6

⚠ WARNING

MAXIMUM AVAILABLE FAULT CURRENT:
XXXX AMPS

DATE: XX/XX/XX

NOTES:

1. PLACE LABEL IN A VISIBILE LOCATION: SWITCHBOARD
2. RED BACKGROUND, WHITE LETTERING
3. TEXT: MIN. 3/8" AND 1/8" HEIGHT. ALL CAPITAL LETTERS ARIAL OR SIMILAR FONT, NON BOLD
4. MATERIAL NOTE: ENGRAVED ON OUTDOOR–RATED PLASTIC LAMINATE WITH ADHESIVE BACKING SUITABLE FOR THE ENVIRONMENT
5. APPLICABLE NEC SECTIONS: NEC 110.9

MAXIMUM FAULT CURRENT LABEL | 5

NOTES:

1. ALL CONDUITS TO BE SCHEDULE 40
2. SEE PLAN FOR CONDUIT SIZES & QUANTITY

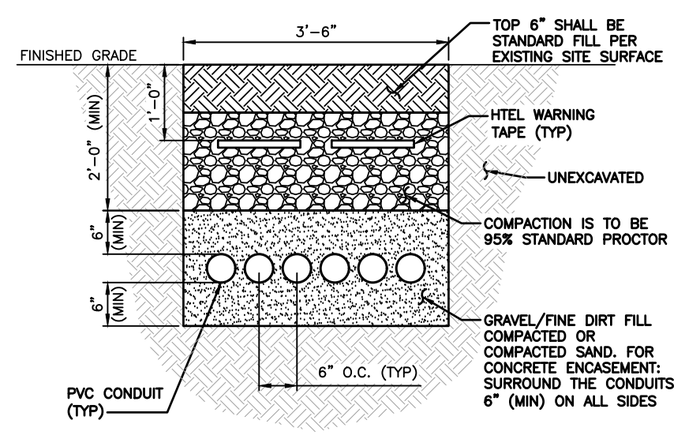

TYPICAL RIVIAN EQUIPMENT CONDUIT TRENCH DETAIL | 4

STAMP:

8/30/2024

LICENSED PROFESSIONAL ENGINEER
SHELTON D. KEISLING
062.069129
OF ILLINOIS

Docusigned by:
Shelton Keisling
EF94D8A5B80B407...

ENGINEERING LICENSE:
STATE OF ILLINOIS
PE CERTIFICATE OF AUTHORIZATION # 184.003404

ENGINEER:		PE#:	DISCIPLINE:	
SDK	SHELTON D. KEISLING	062-069129	ELECTRICAL	E
TMS	TERRANCE M. SUPER	062-052514	ELECTRICAL	E

PLANS PREPARED FOR:
RIVIAN

PLANS PREPARED BY:
SSC

DRAWING NOTICE:
THIS DRAWING HAS NOT BEEN PUBLISHED AND IS THE SOLE PROPERTY OF SSC, INC. AND IS LENT TO THE BORROWER FOR THEIR CONFIDENTIAL USE ONLY, AND IN CONSIDERATION OF THE LOAN OF THIS DRAWING, THE BORROWER PROMISES AND AGREES TO RETURN IT UPON REQUEST AND AGREES THAT IT WILL NOT BE REPRODUCED, COPIED, LENT OR OTHERWISE DISPOSED OF DIRECTLY OR INDIRECTLY, NOR USED FOR ANY PURPOSE OTHER THAN FOR WHICH IT IS FURNISHED.

SUBMITTALS:

DESCRIPTION	DATE	BY	REV
ISSUED FOR CONSTRUCTION	03/30/23	DWO	0
TRAILER STALL REVISED	04/11/23	TX	1
REVISED PER CLIENT COMMENTS	12/20/23	IBA	2
REVISED PER CLIENT COMMENTS	04/23/24	IBA	3
REVISED PER AHJ COMMENTS	08/30/24	IBA	4

APPLICANT SITE NAME:
OAK BROOK

SSC SITE NUMBER:
IL-00002

SITE ADDRESS:
100 OAK BROOK CENTER,
STE. EV
OAK BROOK, IL 60523

SHEET DESCRIPTION:
ELECTRICAL DETAILS (1 OF 2)

SHEET #:
E-3.0

Docusign Envelope ID: 54931469-A40F-46BD-84C4-27E801AD8D1A

CIRCUIT BREAKER SETTINGS

BREAKER SIZE	LT P.U.	LT DELAY	ST P.U.	ST DELAY	INST	GROUND FAULT P.U.	GROUND FAULT DELAY
1600A	1(1600A)	16	6	0.3 OFF	12	E	0.4 OFF
600A	(600A)	X	X	X	4	X	X

STAMP:

8/30/2024

LICENSED PROFESSIONAL ENGINEER
SHELTON D. KEISLING
062.069129
OF ILLINOIS

Docusigned by:
Shelton Keisling
EF94D8A5B80B407...

ENGINEERING LICENSE:
STATE OF ILLINOIS
PE CERTIFICATE OF AUTHORIZATION # 184.003404

ENGINEER:		PE#:	DISCIPLINE:	
SDK	SHELTON D. KEISLING	062-069129	ELECTRICAL	E
TMS	TERRANCE M. SUPER	062-052514	ELECTRICAL	E

PLANS PREPARED FOR:
RIVIAN

PLANS PREPARED BY:
SSC

DRAWING NOTICE:
THIS DRAWING HAS NOT BEEN PUBLISHED AND IS THE SOLE PROPERTY OF SSC, INC. AND IS LENT TO THE BORROWER FOR THEIR CONFIDENTIAL USE ONLY, AND IN CONSIDERATION OF THE LOAN OF THIS DRAWING, THE BORROWER PROMISES AND AGREES TO RETURN IT UPON REQUEST AND AGREES THAT IT WILL NOT BE REPRODUCED, COPIED, LENT OR OTHERWISE DISPOSED OF DIRECTLY OR INDIRECTLY, NOR USED FOR ANY PURPOSE OTHER THAN FOR WHICH IT IS FURNISHED.

SUBMITTALS:

DESCRIPTION	DATE	BY	REV
ISSUED FOR CONSTRUCTION	03/30/23	DWO	0
TRAILER STALL REVISED	04/11/23	TX	1
REVISED PER CLIENT COMMENTS	12/20/23	IBA	2
REVISED PER CLIENT COMMENTS	04/23/24	IBA	3
REVISED PER AHJ COMMENTS	08/30/24	IBA	4

APPLICANT SITE NAME:
OAK BROOK

SSC SITE NUMBER:
IL-00002

SITE ADDRESS:
100 OAK BROOK CENTER,
STE. EV
OAK BROOK, IL 60523

SHEET DESCRIPTION:
ELECTRICAL DETAILS (2 OF 2)

SHEET #:
E-3.1

Docusign Envelope ID: 54931469-A40F-46BD-84C4-27E801AD8D1A

GENERAL NOTES:

1. SEE SHEET E-2.1 FOR WIRE QUANTITIES AND SIZES.
2. CONTRACTOR TO REFERENCE GROUNDING DETAILS BY COMED ELECTRIC
3. FUTURE CONDUCTORS SHALL BE RUN THROUGH DC CONDUITS UPON INSTALLATION OF FUTURE EQUIPMENT

LEGEND:

- ● EXOTHERMIC CONNECTION
- ▲ MECHANICAL CONNECTION

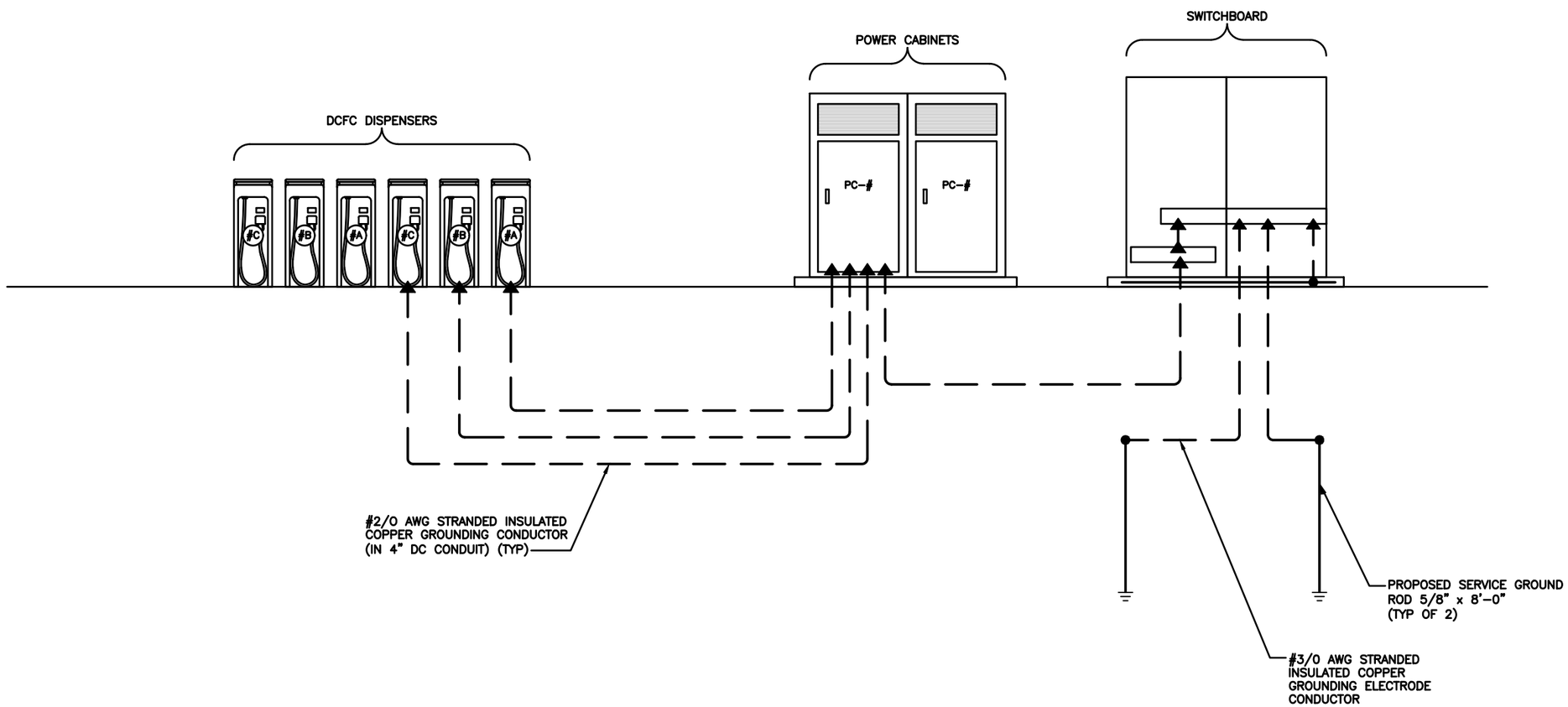

GROUNDING RISER DIAGRAM | 1

STAMP:

8/30/2024

LICENSED PROFESSIONAL ENGINEER
SHELTON D. KEISLING
062.069129
OF ILLINOIS

Docusigned by:
Shelton Keisling
EF94D8A5B80B407...

ENGINEERING LICENSE:
STATE OF ILLINOIS
PE CERTIFICATE OF AUTHORIZATION # 184.003404

ENGINEER:		PE#:	DISCIPLINE:	
SDK	SHELTON D. KEISLING	062-069129	ELECTRICAL	E
TMS	TERRANCE M. SUPER	062-052514	ELECTRICAL	E

PLANS PREPARED FOR:

RIVIAN

PLANS PREPARED BY:

SSC

DRAWING NOTICE:
THIS DRAWING HAS NOT BEEN PUBLISHED AND IS THE SOLE PROPERTY OF SSC, INC. AND IS LENT TO THE BORROWER FOR THEIR CONFIDENTIAL USE ONLY, AND IN CONSIDERATION OF THE LOAN OF THIS DRAWING, THE BORROWER PROMISES AND AGREES TO RETURN IT UPON REQUEST AND AGREES THAT IT WILL NOT BE REPRODUCED, COPIED, LENT OR OTHERWISE DISPOSED OF DIRECTLY OR INDIRECTLY, NOR USED FOR ANY PURPOSE OTHER THAN FOR WHICH IT IS FURNISHED.

SUBMITTALS:

DESCRIPTION	DATE	BY	REV
ISSUED FOR CONSTRUCTION	03/30/23	DWO	0
TRAILER STALL REVISED	04/11/23	TX	1
REVISED PER CLIENT COMMENTS	12/20/23	IBA	2
REVISED PER CLIENT COMMENTS	04/23/24	IBA	3
REVISED PER AHJ COMMENTS	08/30/24	IBA	4

APPLICANT SITE NAME:
OAK BROOK

SSC SITE NUMBER:
IL-00002

SITE ADDRESS:
100 OAK BROOK CENTER,
STE. EV
OAK BROOK, IL 60523

SHEET DESCRIPTION:
GROUNDING RISER DIAGRAM

SHEET #:
G-1.0

Docusign Envelope ID: 54931469-A40F-46BD-84C4-27E801AD8D1A

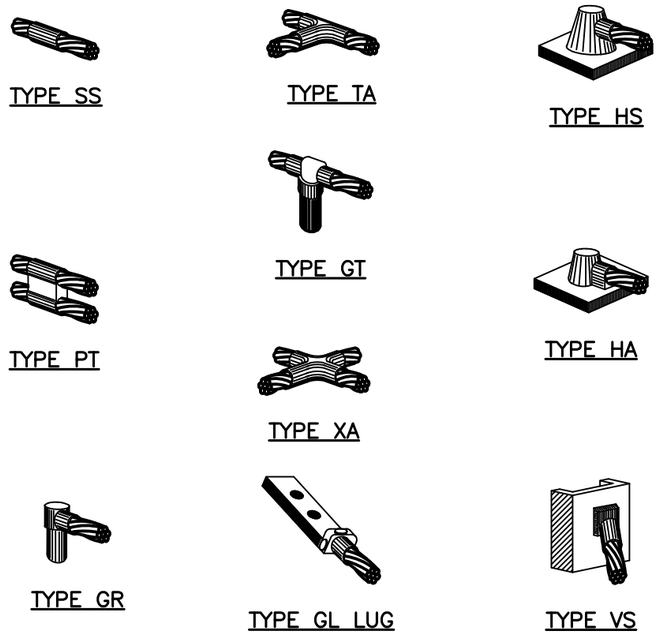

EXOTHERMIC CONNECTION DETAILS | 1

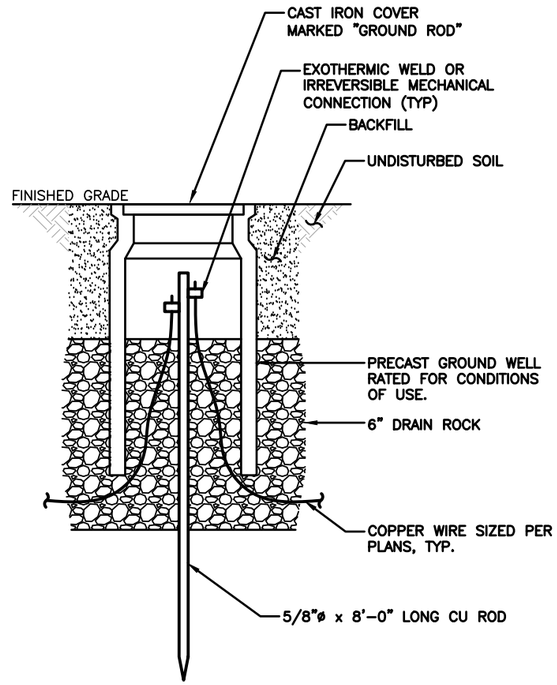

INSPECTION/TEST WELL DETAIL | 2

DETAIL NOT USED | 3

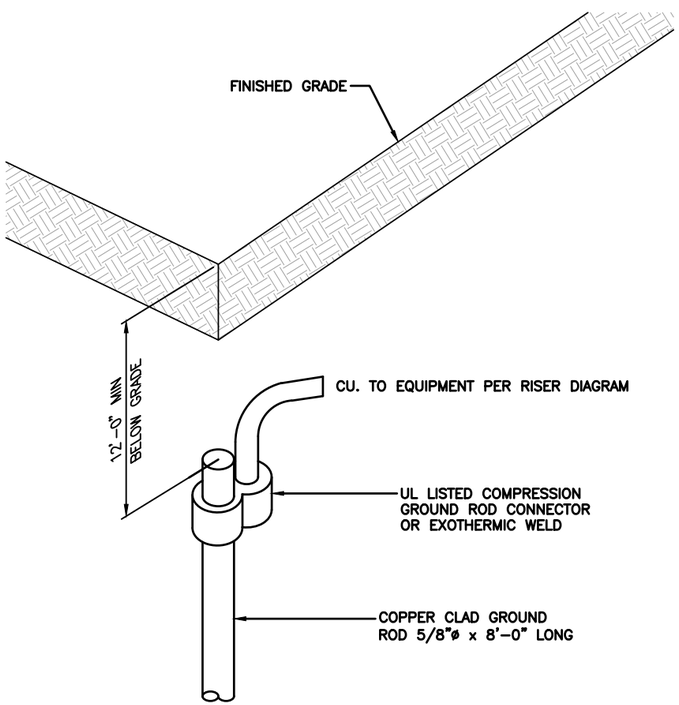

GROUND ROD DETAIL | 5

LEGEND:

- ● EXOTHERMIC CONNECTION
- ▲ MECHANICAL CONNECTION

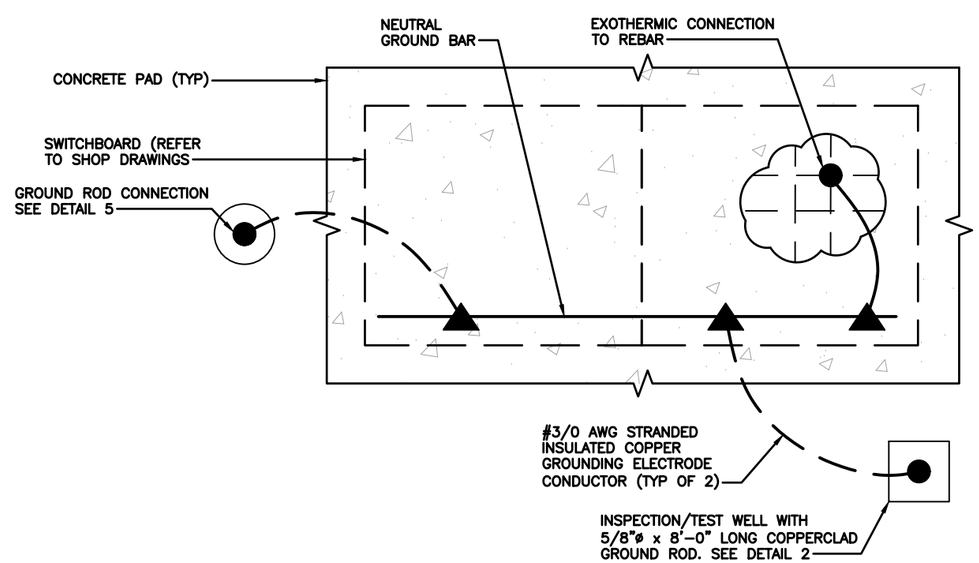

SWITCHBOARD FOUNDATION GROUNDING PLAN | 4

STAMP:

8/30/2024

LICENSED PROFESSIONAL ENGINEER
SHELTON D. KEISLING
062.069129
OF ILLINOIS

Docusigned by:
Shelton Keisling
EF94D8A5B80B407...

ENGINEERING LICENSE:

STATE OF ILLINOIS
PE CERTIFICATE OF AUTHORIZATION # 184.003404

ENGINEER:		PE#:	DISCIPLINE:	
SDK	SHELTON D. KEISLING	062-069129	ELECTRICAL	E
TMS	TERRANCE M. SUPER	062-052514	ELECTRICAL	E

PLANS PREPARED FOR:

RIVIAN

PLANS PREPARED BY:

SSC

DRAWING NOTICE:

THIS DRAWING HAS NOT BEEN PUBLISHED AND IS THE SOLE PROPERTY OF SSC, INC. AND IS LENT TO THE BORROWER FOR THEIR CONFIDENTIAL USE ONLY, AND IN CONSIDERATION OF THE LOAN OF THIS DRAWING, THE BORROWER PROMISES AND AGREES TO RETURN IT UPON REQUEST AND AGREES THAT IT WILL NOT BE REPRODUCED, COPIED, LENT OR OTHERWISE DISPOSED OF DIRECTLY OR INDIRECTLY, NOR USED FOR ANY PURPOSE OTHER THAN FOR WHICH IT IS FURNISHED.

SUBMITTALS:

DESCRIPTION	DATE	BY	REV
ISSUED FOR CONSTRUCTION	03/30/23	DWO	0
TRAILER STALL REVISED	04/11/23	TX	1
REVISED PER CLIENT COMMENTS	12/20/23	IBA	2
REVISED PER CLIENT COMMENTS	04/23/24	IBA	3
REVISED PER AHJ COMMENTS	08/30/24	IBA	4

APPLICANT SITE NAME:

OAK BROOK

SSC SITE NUMBER:

IL-00002

SITE ADDRESS:

100 OAK BROOK CENTER,
STE. EV
OAK BROOK, IL 60523

SHEET DESCRIPTION:

GROUNDING DETAILS

SHEET #:

G-2.0

Docusign Envelope ID: 54931469-A40F-46BD-84C4-27E801AD8D1A

GENERAL REQUIREMENTS

PART 1: GENERAL

1.1 INTENT:

A. THESE SPECIFICATIONS AND CONSTRUCTION DRAWINGS DESCRIBE THE WORK TO BE DONE AND THE MATERIALS TO BE FURNISHED FOR CONSTRUCTION. PLANS ARE NOT TO BE SCALED.
B. THE DRAWINGS AND SPECIFICATIONS ARE INTENDED TO BE FULLY EXPLANATORY AND SUPPLEMENTARY, HOWEVER, SHOULD ANYTHING BE SHOWN, INDICATED OR SPECIFIED ON ONE AND NOT THE OTHER, IT SHALL BE DONE THE SAME AS IF SHOWN, INDICATED OR SPECIFIED IN BOTH.
C. THE INTENTION OF DOCUMENTS IS TO INCLUDE ALL LABOR AND MATERIALS REASONABLY NECESSARY FOR THE PROPER EXECUTION AND COMPLETION OF THE WORK AS STIPULATED IN THE CONTRACT.
D. CONFLICTS: THE CONTRACTOR SHALL BE RESPONSIBLE FOR VERIFICATION OF ALL MEASUREMENTS AT THE SITE BEFORE ORDERING MATERIALS OR DOING ANY WORK. NO COMPENSATION SHALL BE ALLOWED DUE TO DIFFERENCES BETWEEN ACTUAL DIMENSIONS AND THOSE ON THE DOCUMENTS. ANY DISCREPANCY SHALL BE REPORTED TO THE OWNER OR THEIR AGENT FOR CONSIDERATION.

1.2 LICENSING REQUIREMENTS:

A. THE CONTRACTOR IS RESPONSIBLE FOR INSURING THAT ALL APPLICABLE LICENSES AND BONDS ARE IN PLACE AND MAINTAINED FOR THE ENTIRETY OF THEIR SCOPE OF THE PROJECT.

1.3 STORAGE:

A. ALL MATERIALS MUST BE STORED IN A LEVEL AND DRY FASHION THAT DOES NOT OBSTRUCT THE FLOW OF OTHER WORK. ANY STORAGE METHOD MUST MEET ALL RECOMMENDATIONS OF THE ASSOCIATED MANUFACTURER.

1.4 CLEAN UP:

A. THE CONTRACTOR SHALL KEEP THE SITE FREE FROM ACCUMULATION OF WASTE MATERIALS OR RUBBISH AT ALL TIMES.

1.5 QUALITY ASSURANCE:

A. ALL WORK SHALL BE IN ACCORDANCE WITH APPLICABLE LOCAL, STATE, AND FEDERAL REGULATIONS.

PART 2: PRODUCTS – NOT APPLICABLE TO THIS SECTION

PART 3: EXECUTION – NOT APPLICABLE TO THIS SECTION

END OF SECTION

SOIL EROSION AND SEDIMENTATION CONTROL

PART 1: GENERAL

IN ACCORDANCE WITH RULE 1709 PROMULGATED UNDER THE AUTHORITY OF PART 91, SOILD EROSION AND SEDIMENTATION CONTROL, OF THE NATURAL RESOURCES AND ENVIRONMENTAL PROTECTION ACT, 1994 PA 451, AS AMENDED, AND IN ADDITION TO THE INFORMATION ON THE ATTACHED PLANS AND SPECIAL CONDITIONS, THE FOLLOWING GENERAL CONDITIONS APPLY TO THE EARTH CHANGE:

A. DESIGN, CONSTRUCTION, AND COMPLETE THE EARTH CHANGE IN A MANNER THAT LIMITS THE EXPOSED AREA OF DISTURBED LAND FOR THE SHORTEST PERIOD OF TIME.

B. REMOVE SEDIMENT CAUSED BY ACCELERATED SOIL EROSION FROM RUNOFF WATER BEFORE IT LEAVES THE SITE OF THE EARTH CHANGE.

C. TEMPORARY OR PERMANENT CONTROL MEASURES SHALL BE DESIGNED AND INSTALLED TO CONVEY WATER AROUND, THROUGH, OR FROM THE EARTH CHANGE AT A NON–EROSIVE VELOCITY.

D. INSTALL TEMPORARY SOIL EROSION AND SEDIMENTATION CONTROL MEASURES BEFORE OR UPON COMMENCEMENT OF THE EARTH CHANGE ACTIVITY AND MAINTAIN THE MEASURES ON A DAILY BASIS. REMOVE TEMPORARY SOIL EROSION AND SEDIMENTATION CONTROL MEASURE AFTER PERMANENT SOIL EROSION MEASURES ARE IN PLACE AND THE AREA IS STABILIZED. ("STABILIZED" MEANS THE ESTABLISHMENT OF VEGETATION OR THE PROPER PLACEMENT, GRADING, OR COVERING OF SOIL TO ENSURE ITS RESISTANCE TO SOIL EROSION, SLIDING, OR OTHER EARTH MOVEMENT.)

E. COMPLETE PERMANENT SOIL EROSION CONTROL MEASURES FOR THE EARTH CHANGE WITHIN FIE CALENDAR DAYS AFTER FINAL GRADING OR UPON COMPLETION OF THE FINAL EARTH CHANGE. IF IT IS NOT POSSIBLE TO PERMANENTLY STABILIZE THE EARTH CHANGE, THEN MAINTAIN TEMPORARY SOIL EROSION AND SEDIMENTATION CONTROL MEASURES UNTIL PERMANENT SOIL EROSION CONTROL MEASURES ARE IN PLACE AND THE AREA IS STABILIZED.

STAMP:

8/30/2024

LICENSED PROFESSIONAL ENGINEER
SHELTON D. KEISLING
062.069129
OF ILLINOIS

Docusigned by:
Shelton Keisling
EF94D8A5B80B407...

ENGINEERING LICENSE:
STATE OF ILLINOIS
PE CERTIFICATE OF AUTHORIZATION # 184.003404

ENGINEER:		PE#:	DISCIPLINE:	
SDK	SHELTON D. KEISLING	062-069129	ELECTRICAL	E
TMS	TERRANCE M. SUPER	062-052514	ELECTRICAL	E

PLANS PREPARED FOR:

RIVIAN

PLANS PREPARED BY:

SSC

DRAWING NOTICE:
THIS DRAWING HAS NOT BEEN PUBLISHED AND IS THE SOLE PROPERTY OF SSC, INC. AND IS LENT TO THE BORROWER FOR THEIR CONFIDENTIAL USE ONLY, AND IN CONSIDERATION OF THE LOAN OF THIS DRAWING, THE BORROWER PROMISES AND AGREES TO RETURN IT UPON REQUEST AND AGREES THAT IT WILL NOT BE REPRODUCED, COPIED, LENT OR OTHERWISE DISPOSED OF DIRECTLY OR INDIRECTLY, NOR USED FOR ANY PURPOSE OTHER THAN FOR WHICH IT IS FURNISHED.

SUBMITTALS:

DESCRIPTION	DATE	BY	REV
ISSUED FOR CONSTRUCTION	03/30/23	DWO	0
TRAILER STALL REVISED	04/11/23	TX	1
REVISED PER CLIENT COMMENTS	12/20/23	IBA	2
REVISED PER CLIENT COMMENTS	04/23/24	IBA	3
REVISED PER AHJ COMMENTS	08/30/24	IBA	4

APPLICANT SITE NAME:
OAK BROOK

SSC SITE NUMBER:
IL-00002

SITE ADDRESS:
100 OAK BROOK CENTER,
STE. EV
OAK BROOK, IL 60523

SHEET DESCRIPTION:
SPECIFICATIONS
(1 OF 5)

SHEET #:
SP-1.0

Docusign Envelope ID: 54931469-A40F-46BD-84C4-27E801AD8D1A

CAST-IN-PLACE-CONCRETE

PART 1: GENERAL

1.1 SUMMARY:

A. FURNISH AND INSTALL ALL CAST-IN-PLACE CONCRETE, REINFORCING AND ACCESSORIES, AS SPECIFIED HEREIN AND AS SHOWN ON THE DRAWINGS.

1.2 SUBMITTALS:

A. PRODUCT DATA: SUBMIT MANUFACTURER'S PRODUCT DATA AND INSTALLATION INSTRUCTIONS FOR EACH MATERIAL AND PRODUCT USED.

B. SHOP DRAWINGS: SUBMIT SHOP DRAWINGS INDICATING MATERIAL CHARACTERISTICS, DETAILS OF CONSTRUCTION, CONNECTIONS, AND RELATIONSHIP WITH ADJACENT CONSTRUCTION.

1. SHOP DRAWINGS SHALL BE PREPARED AND STAMPED BY A QUALIFIED ENGINEER LICENSED IN THE JURISDICTION OF THE PROJECT.

C. MIX DESIGN: SUBMIT FOR APPROVAL MIX DESIGN PROPOSED FOR USE.

1.3 QUALITY ASSURANCE:

A. COMPLY WITH GOVERNING CODES AND REGULATIONS. PROVIDE PRODUCTS OF ACCEPTABLE MANUFACTURERS, WHICH HAVE BEEN IN SATISFACTORY USE IN SIMILAR SERVICE FOR A MINIMUM OF THREE YEARS. USE EXPERIENCED INSTALLERS. DELIVER, HANDLE, STORE MATERIALS IN ACCORDANCE WITH MANUFACTURER'S INSTRUCTIONS.

B. TESTING: EMPLOY AN INDEPENDENT TESTING AGENCY ACCEPTABLE TO OWNER TO DESIGN CONCRETE MIXES AND TO PERFORM MATERIAL EVALUATION TESTS. PROVIDE 4 AND 28 DAY CYLINDER TESTS. COMPLY WITH ASTM C 143, C 173, C 31 AND C 39.

C. STANDARDS

1. ACI 301, SPECIFICATIONS FOR STRUCTURAL CONCRETE FOR BUILDINGS.

2. ACI 318, BUILDING CODE REQUIREMENTS FOR REINFORCED CONCRETE, AND CRSI MANUAL OF STANDARD PRACTICE.

PART 2: PRODUCTS

2.1 MATERIALS:

A. MATERIALS SHALL CONFORM TO THE RESPECTIVE PUBLICATIONS AND OTHER REQUIREMENTS SPECIFIED HEREIN.

B. CEMENT: CEMENT SHALL CONFORM TO ASTM C150, TYPE 1. CEMENT MAY BE BAGGED OR BULK. CEMENT SHALL BE USED FROM ONLY ONE MILL THROUGHOUT PROJECT.

C. FINE AGGREGATE: FINE AGGREGATE SHALL CONFORM TO ASTM C33-08 AND SHALL BE UNIFORMLY GRADED, CLEAN, SHARP, WASHED MATERIAL OR CRUSHED SAND, FREE FROM ORGANIC IMPURITIES.

D. COURSE AGGREGATE: COURSE AGGREGATE SHALL CONFORM TO ASTM C33-08 AND SHALL BE NATURAL WASHED GRAVEL OR WASHED CRUSHED ROCK HAVING HARD, STRONG, DURABLE PIECES, FREE FORM ADHERENT COATINGS, THE MAXIMUM SIZE OF COARSE AGGREGATE SHALL BE 3/4" IN ACCORDANCE WITH THE REQUIREMENTS OF ASTM C33-08; GRADATION SIZE NO. 67.

E. WATER: WATER USED IN THE CONCRETE MIX SHALL BE POTABLE, CLEAN, AND FREE FROM OILS, ACIDS, SALTS, CHLORIDES, ALKALI, SUGAR, VEGETABLE, OR OTHER INJURIOUS SUBSTANCES.

F. REINFORCING STEEL: ALL BARS ARE TO BE NEW BILLET STEEL CONFORMING TO ASTM A615, GRADE 60. BENDING DETAILS ARE TO CONFORM TO THE STANDARDS OF ACI 318.

G. FORMS: THE FORMS SHALL BE TRUE AND RIGID AND CONFORM TO SHAPE, LINE AND DIMENSIONS AS SHOWN ON THE DRAWINGS. ALL FORMS SHALL BE RIGIDLY CONSTRUCTED, BRACED AND TIED TO PREVENT ANY DEFLECTION OR DISPLACEMENT DURING PLACING OF CONCRETE. ALL EXPOSED CORNERS AND EDGES SHALL HAVE 3/4" FILLETS. ALL JOINTS SHALL BE MORTAR TIGHT; OPEN JOINTS SHALL BE SEALED AS REQUIRED.

H. CONCRETE:

1. PROPORTIONING: CONCRETE SHALL CONFORM TO THE FOLLOWING:

a. CEMENT-6 SACKS PER CUBIC YARD, MINIMUM

b. WATER SHALL BE KEPT TO AN ABSOLUTE MINIMUM TO MAINTAIN SLUMP AS SPECIFIED

c. AGGREGATE; SAND FACTOR SHALL BE AS REQUIRED TO GIVE THE BEST WORKABLE MIX WITHIN THE RANGE OF 46% TO 52% OF TOTAL AGGREGATE.

d. STRENGTH-4000 PSI AT 28 DAYS, UNLESS NOTED OTHERWISE

e. ALL CONCRETE SHALL CONTAIN A WATER-REDUCING AGENT AND SHALL HAVE THREE (3) TO FIVE (5) PERCENT ENTRAINED AIR.

2.2 SLUMP:

A. THE MAXIMUM SLUMP SHALL NOT EXCEED 3" EXCEPT FOR CONCRETE TO BE PLACED IN FORMS 8" WIDE OR LESS, WHERE THE MAXIMUM SLUMP SHALL BE 4".

B. THE DETERMINATION OF SLUMP SHALL CONFORM TO ASTM C143.

2.3 MIXING:

A. THE CONTRACTOR SHALL USE READY-MIXED CONCRETE, MIXED AND DELIVERED IN CONFORMANCE WITH ASTM C94.

2.4 MIXTURES:

A. THE CONCRETE SHALL CONTAIN AN AIR-ENTRAINING ADMIXTURE COMPLYING WITH THE REQUIREMENTS OF ASTM C-260 AND ACI 212.1R AND A WATER-REDUCING ADMIXTURE COMPLYING WITH THE REQUIREMENTS OF ASTM C-494 AND ACI 212.1R. ADMIXTURES SHALL BE PURCHASE AND BATCHED IN LIQUID SOLUTION. THE USE OF CALCIUM CHLORIDE OR AN ADMIXTURE CONTAINING CALCIUM CHLORIDE IS PROHIBITED.

B. ADMIXTURES SHALL BE OF THE SAME MANUFACTURER TO ASSURE COMPATIBILITY.

C. ACCEPTABLE MANUFACTURERS ARE:

1. W.R. GRACE 3. MASTER BUILDERS

2. SIKA GROUP 4. EUCLID CHEMICAL CO

2.5 CURING COMPOUNDS:

A. CURING COMPOUNDS SHALL CONFORM TO ASTM C309, TYPE 1, ID, CLASS A AND B AND ASTM C171 AS APPLICABLE

PART 3: EXECUTION

3.1 GENERAL:

A. CONSTRUCT AND ERECT FORMWORK IN ACCORDANCE WITH ACI 301 ACI 347.

B. COLD-WEATHER CONCRETING SHALL BE IN ACCORDANCE WITH ACI 306.

C. HOT-WEATHER CONCRETING SHALL BE IN ACCORDANCE WITH ACI 305.

3.2 INSERTS, EMBEDDED COMPONENTS AND OPENINGS:

A. CONTRACTOR SHALL CHECK ALL CIVIL, ARCHITECTURAL, STRUCTURAL, AND ELECTRICAL DRAWINGS FOR OPENINGS, SLEEVES, ANCHOR BOLTS, INSERTS AND OTHER ITEMS TO BE BUILT INTO THE CONCRETE WORK.

B. COORDINATE THE WORK OF OTHER SECTIONS IN FORMING AND SETTING OPENINGS, RECESSES, SLOTS, CHASES, ANCHORS, INSERTS AND OTHER ITEMS TO BE EMBEDDED.

C. EMBEDDED ITEMS SHALL BE SET ACCURATELY IN LOCATION, ALIGNMENT, ELEVATION, AND PLUMBNESS. LOCATE AND MEASURE FROM ESTABLISHED SURVEYED REFERENCE BENCHMARKS.

D. EMBEDDED ITEMS SHALL BE ANCHORED INTO PLACE AS REQUIRED TO PREVENT MOVEMENT DURING CONCRETE PLACEMENT AND CONSOLIDATION. COMPONENTS FORMING A PART OF A COMPLETE ASSEMBLY SHALL BE ALIGNED BEFORE ANCHORING. PROVIDE TEMPORARY BRACING, ANCHORAGE, AND TEMPLATES AS REQUIRED TO MAINTAIN THE SETTING AND ALIGNMENT.

3.3 REINFORCEMENT PLACEMENT:

A. REINFORCEMENT SHALL BE PLACED IN ACCORDANCE WITH CHECKED AND RELEASED DRAWINGS AND ACI 301 AND ACI 315; SECURELY WIRE-TIE REINFORCEMENT AT ALL INTERSECTIONS.

B. ACCURATELY POSITION, SUPPORT AND SECURE REINFORCEMENT AGAINST DISPLACEMENT FROM FORMWORK CONSTRUCTION OR CONCRETE PLACEMENT AND CONSOLIDATION. REINFORCING SHALL BE SUPPORTED ON METAL CHAIRS, RUNNERS, BOLSTERS, SPACERS, AND HANGERS.

C. SPLICES OF REINFORCING BARS SHALL BE CLASS B UNLESS SHOWN OTHERWISE. SPLICES SHALL BE STAGGERED. FULL DEVELOPMENT LENGTH SHALL BE PROVIDED ACROSS JOINTS.

D. LOCATE REINFORCING TO PROVIDE CONCRETE COVER AND SPACING SHOWN ON THE DRAWINGS. MINIMUM COVER SHALL BE AS REQUIRED BY ACI 318.

E. WELDING OF AND TO ANY REINFORCING MATERIALS INCLUDING TACK WELDING OF CROSSING BARS IS STRICTLY PROHIBITED. BARS SHALL BE FREE OF FLAKY OR SCALY RUST AT THE TIME THE CONCRETE IS PLACED.

3.4 CONCRETE PLACEMENT:

A. PRIOR TO PLACING CONCRETE, FORMS AND REINFORCEMENT SHALL BE THOROUGHLY INSPECTED. ALL WOOD CHIPS, DIRT, ETC., AS WELL AS ALL TEMPORARY BRACING, TIES, AND CLEATS REMOVED, AND ALL OPENINGS FOR UTILITIES PROPERLY BOXED, ALL FORMS SHALL BE PROPERLY SECURED IN THEIR CORRECT POSITION AND MADE TIGHT. ALL REINFORCING AND EMBEDDED ITEMS SHALL BE SECURED IN THEIR PROPER LOCATIONS.. ALL OLD AND DRY CONCRETE AND DIRT SHALL BE CLEANED AND ALL STANDING WATER AND OTHER FOREIGN MATTER REMOVED.

B. PLACING CONCRETE SHALL BE IN ACCORDANCE WITH ACI 301 AND ACI 304 AND SHALL BE CARRIED OUT AT SUCH A RATE THAT THE CONCRETE PREVIOUSLY PLACED IS STILL PLASTIC AND INTEGRATED WITH THE FRESHLY PLACE CONCRETE. CONCRETING, ONCE STARTED, SHALL BE CARRIED ON AS A CONTINUOUS OPERATION UNTIL THE SECTION IS COMPLETED. NO COLD JOINTS SHALL BE ALLOWED.

C. CONSTRUCTION JOINTS: USE KEYWAYS, CONTINUE REINFORCEMENT THROUGH JOINT.

D. EXPANSION JOINTS: FOR EXTERIOR WORK, LOCATE AT 30'-0" O.C. MAXIMUM, AT APPROVED LOCATIONS. PROVIDE SMOOTH DOWELS ACROSS JOINT WHICH PERMIT 1" HORIZONTAL MOVEMENT AND NO VERTICAL SHEAR MOVEMENT.

E. ISOLATION JOINTS: PROVIDE BETWEEN SLABS AND VERTICAL ELEMENTS SUCH AS COLUMNS AND STRUCTURAL WALLS.

F. CONTROL JOINTS: PROVIDE SAWN OR TOOLED JOINTS OR REMOVABLE INSERT STRIPS; DEPTH EQUAL TO 1/4" SLAB THICKNESS. SPACING SHALL BE AS REQUIRED AND APPROVED.

G. ALL CONCRETE SHALL BE THOROUGHLY CONSOLIDATED AND COMPACTED BY VIBRATION, SPADING, RODDING, OR FORKING DURING THE OPERATION OF PLACING AND DEPOSITING IN ACCORDANCE WITH ACI 309. THE CONCRETE SHALL BE WORKED AROUND REINFORCEMENT, EMBEDDED ITEMS, AND INTO THE CORNERS OF THE FORMS SO AS TO ELIMINATE ALL AIR AND STONE POCKETS.

3.5 FINISHING:

A. FINISHING OF ALL SLABS SHALL BE IN ACCORDANCE WITH ACI 302.1; SECTION 7.2 WITH A MINIMUM OF THREE TROWELINGS.

1. INTERIOR SLAB FINISH TOLERANCE AS MEASURED IN ACCORDANCE WITH ASTM E 1155, SHALL HAVE AN OVERALL TEST F NUMBER FOR FLATNESS, FF=20 AND FOR LEVEL, FL=15. THE MINIMUM LOCAL NUMBER FOR FLATNESS, FF=15 AND FOR LEVEL, FL=10.

2. EXTERIOR SLAB FINISH SHALL BE FLAT (FF=20) AND SHALL BE SLOPED A MINIMUM OF 1/8" PER FOOT TO A MAXIMUM OF 1/4" PER FOOT TO PREVENT PONDING WATER.

B. SURFACES OF SLABS SHALL RECEIVE TWO COATS OF CLEAR SEALER/HARDNER.

C. ALL ABOVE GRADE SLABS SHALL HAVE A BROOM FINISH.

3.6 CURING:

A. FRESHLY DEPOSITED CONCRETE SHALL BE PROTECTED FROM PREMATURE DRYING AND EXCESSIVELY HOT OR COLD TEMPERATURES AND SHALL BE MAINTAINED WITH MINIMAL MOISTURE LOSS AT A RELATIVELY CONSTANT TEMPERATURE FOR A PERIOD OF TIME NECESSARY FOR THE HYDRATION OF THE CEMENT AND PROPER HARDENING OF THE CONCRETE.

B. CURING SHALL IMMEDIATELY FOLLOW THE FINISH OPERATION. CONCRETE SHALL BE KEPT CONTINUOUSLY MOIST AT LEAST OVERNIGHT, IMMEDIATELY FOLLOWING THE INITIAL CURING. BEFORE THE CONCRETE HAS DRIED, ADDITIONAL CURING SHALL BE ACCOMPLISHED BY ONE OF THE FOLLOWING MATERIALS OR METHODS:

1. PONDING OR CONTINUOUS SPRINKLING

2. ABSORPTIVE MAT OR FABRIC KEPT CONTINUOUSLY WET

3. NON-ABSORPTIVE FILM (POLYETHYLENE) OVER A PREVIOUSLY SPRINKLED SURFACE

4. SAND OR OTHER COVERING KEPT CONTINUOUSLY WET

5. CONTINUOUS STEAM (NOT EXCEEDING 150 DEGREES F) OR VAPOR MIST BATH.

6. SPRAYED-ON CURING COMPOUND APPLIED IN TWO COATES, SPRAYED IN PERPENDICULAR DIRECTIONS.

C. THE FINAL CURING SHALL CONTINUE UNTIL THE CUMULATIVE NUMBER OF DAYS OR FRACTION THEREOF, NOT NECESSARILY CONSECUTIVE, DURING WHICH TEMPERATURE OF THE AIR IN CONTACT WITH CONCRETE IS ABOVE 50 DEGREES F HAS TOTALED SEVEN (7) DAYS. CONCRETE SHALL NOT BE PERMITTED TO FREEZE DURING THE CURING PERIOD. RAPID DRYING AT THE END OF THE CURING PERIOD SHALL BE PREVENTED.

END OF SECTION

STAMP:

8/30/2024

LICENSED PROFESSIONAL ENGINEER
SHELTON D. KEISLING
062.069129
OF ILLINOIS

Docusigned by:
Shelton Keisling
EF94D8A5B80B407...

ENGINEERING LICENSE:
STATE OF ILLINOIS
PE CERTIFICATE OF AUTHORIZATION # 184.003404

ENGINEER:		PE#:	DISCIPLINE:	
SDK	SHELTON D. KEISLING	062-069129	ELECTRICAL	E
TMS	TERRANCE M. SUPER	062-052514	ELECTRICAL	E

PLANS PREPARED FOR:

RIVIAN

PLANS PREPARED BY:

SSC

DRAWING NOTICE:

THIS DRAWING HAS NOT BEEN PUBLISHED AND IS THE SOLE PROPERTY OF SSC, INC. AND IS LENT TO THE BORROWER FOR THEIR CONFIDENTIAL USE ONLY, AND IN CONSIDERATION OF THE LOAN OF THIS DRAWING, THE BORROWER PROMISES AND AGREES TO RETURN IT UPON REQUEST AND AGREES THAT IT WILL NOT BE REPRODUCED, COPIED, LENT OR OTHERWISE DISPOSED OF DIRECTLY OR INDIRECTLY, NOR USED FOR ANY PURPOSE OTHER THAN FOR WHICH IT IS FURNISHED.

SUBMITTALS:

DESCRIPTION	DATE	BY	REV
ISSUED FOR CONSTRUCTION	03/30/23	DWO	0
TRAILER STALL REVISED	04/11/23	TX	1
REVISED PER CLIENT COMMENTS	12/20/23	IBA	2
REVISED PER CLIENT COMMENTS	04/23/24	IBA	3
REVISED PER AHJ COMMENTS	08/30/24	IBA	4

APPLICANT SITE NAME:

OAK BROOK

SSC SITE NUMBER:

IL-00002

SITE ADDRESS:

100 OAK BROOK CENTER,
STE. EV
OAK BROOK, IL 60523

SHEET DESCRIPTION:

SPECIFICATIONS
(2 OF 5)

SHEET #:

SP-1.1

Docusign Envelope ID: 54931469-A40F-46BD-84C4-27E801AD8D1A

EARTH MOVING/EXCAVATION/BACKFILLING SECTION

PART 1: GENERAL

1.1 SUMMARY:

A. PROVIDE EARTHWORK OPERATIONS INCLUDING BUT NOT LIMITED TO EXCAVATION, GRADING, TRENCHING AND COMPACTION.

1.2 QUALITY ASSURANCE COMPACTION:

A. UNDER STRUCTURES, BUILDING SLABS, STEPS, PAVEMENTS, AND WALKWAYS, 95% MAXIMUM DENSITY, ASTM D 1557.

1. GRADING TOLERANCES:

a. LAWNS, UNPAVED AREAS, AND WALKS, PLUS OR MINUS 1".

b. KEEP SITE FREE FROM ANY PONDING WATER

c. GRADING TOLERANCE FOR FILL UNDER BUILDING OR EQUIPMENT SLABS: PLUS OR MINUS 1/4" MEASURED WITH 10'-0" STRAIGHTEDGE.

2. TESTING: FIELD TESTING OF EARTHWORK AND COMPACTION SHALL BE PERFORMED BY OWNER'S INDEPENDENT TESTING LAB. THIS WORK IS TO BE COORDINATED BY THE CONTRACTOR.

3. ALL WORK SHALL BE INSPECTED AND RELEASED BY THE OWNER OR HIS AGENT WHO SHALL CARRY OUT THE GENERAL INSPECTION OF THE WORK AS SPECIFIED AND/OR CALLED OUT BY THE CONSTRUCTION DOCUMENTS. PROVIDE A MINIMUM OF 48 HOURS NOTICE PRIOR TO ANY PLACEMENT OF CONCRETE OR BACKFILLING OF TRENCHES. IT IS THE CONTRACTOR'S RESPONSIBILITY TO REQUEST TIMELY INSPECTIONS PRIOR TO PROCEEDING WITH FURTHER WORK THAT WOULD MAKE PARTS OF WORK INACCESSIBLE OR DIFFICULT TO INSPECT.

4. EXISTING UTILITIES: DO NOT INTERRUPT EXISTING UTILITIES SERVING FACILITIES OCCUPIED BY THE OWNER OR OTHERS, EXCEPT WHEN PERMITTED IN WRITING BY OWNER OR HIS AGENT AND THEN ONLY AFTER ACCEPTABLE TEMPORARY UTILITY SERVICES HAVE BEEN PROVIDED.

PART 2: PRODUCTS

2.1 GENERAL:

A. UTILITY TRENCH: PROVIDE WELL GRADED SAND (SW-SM) FROM BASE OF TRENCH TO MINIMUM ABOVE THE HIGHEST CONDUIT WITHIN TRENCH. REMAINDER OF TRENCH AREA CAN BE EITHER AB 3 OR CLEAN GRAVEL AS DESCRIBED HEREIN. COMPACT AS REQUIRED TO PREVENT SETTLING.

B. ACCESS ROADS: 6" MINIMUM (UNLESS NOTED OTHERWISE ON DRAWINGS) COMPACTED AB 3 OR APPROVED EQUAL (UNWASHED CRUSHED LIMESTONE GRAVEL CONSISTING OF MULTIPLE AGGREGATE SIZES, ROCK CHIPS, AND ROCK DUST.)

C. COMPOUND (NEW CONSTRUCTION): 2" THICK CLEAN GRAVEL, WITH 100% PASSING THROUGH A 1" SIEVE OVER 4" COMPACTED AB 3.

D. COMPOUND (EXISTING): PROVIDE CLEAN GRAVEL WITH 100% PASSING THROUGH A 1" SIEVE AS REQUIRED TO BRING COMPOUND TO PROPER GRADE OR REPAIR EXISTING DAMAGED AREAS.

E. STRUCTURAL FILL: PROVIDE 4" MINIMUM AB 3 BELOW STRUCTURES OR SLABS

2.2 MATERIALS:

A. GEOTEXTILE FABRIC: PROVIDE MIRAFI 500X OR APPROVED EQUAL.

B. PLASTIC MARKING TAPE: SHALL BE ACID AND ALKALI RESISTANT POLYETHYLENE FILM SPECIFICALLY MANUFACTURED FOR MARKING AND LOCATING UNDERGROUND UTILITIES, 6" WIDE WITH A MINIMUM THICKNESS OF 0.004". TAPE SHALL HAVE MINIMUM STRENGTH OF 1500 PSI IN BOTH DIRECTIONS AND MANUFACTURED WITH INTEGRAL WIRES OR OTHER MEANS TO ENABLE DETECTION BY A METAL DETECTOR WHEN BURIED UP TO 3'-0" DEEP. THE CORE OF THE TAPE SHALL BE ENCASED IN A PROTECTIVE JACKET OR OTHER MEANS TO PROTECT FROM CORROSION. TAPE COLOR SHALL BE RED FOR ELECTRIC UTILITIES AND ORANGE FOR TELECOMMUNICATION

PART 3: EXECUTION

3.1 INSTALLATION:

A. PRIOR TO EXCAVATING, THOROUGHLY EXAMINE AREA TO BE EXCAVATED AND/OR TRENCHED TO VERIFY THE LOCATIONS OF FEATURES ON THE DRAWINGS AND TO ASCERTAIN THE EXISTENCE OF ANY STRUCTURE NOT SHOWN THAT MIGHT INTERFERE WITH NEW CONSTRUCTION. NOTIFY THE OWNER OR HIS AGENT OF ANY OBSTRUCTIONS THAT WILL PREVENT ACCOMPLISHMENT OF THE WORK AS INDICATED ON THE DRAWINGS.

B. EXCAVATION IS UNCLASSIFIED AND INCLUDES EXCAVATION TO SUBGRADE REGARDLESS OF MATERIALS. REPAIR EXCAVATIONS BEYOND ELEVATIONS AND DIMENSIONS INDICATED AS REQUIRED.

C. MAINTAIN STABILITY OF EXCAVATIONS; COORDINATE SHORING AND BRACING AS REQUIRED BY AUTHORITIES HAVING JURISDICTION. PREVENT SURFACE AND SUBSURFACE WATER FROM ACCUMULATING IN EXCAVATIONS. STOCKPILE SATISFACTORY MATERIALS FOR REUSE, ALLOW FOR PROPER DRAINAGE.

D. COMPACT MATERIALS AT THE OPTIMUM MOISTURE CONTENT AS DETERMINED BY ASTM D 1557 BY AERATION OR WETTING TO 95% OF MAXIMUM DRY DENSITY TO SUITABLE DEPTH.

E. PLACE ACCEPTABLE MATERIALS IN LAYERS NOT MORE THAN 8" LOOSE DEPTH FOR MATERIALS COMPACTED BY HEAVY EQUIPMENT AND NOT MORE THAN 4" LOOSE DEPTH FOR MATERIALS COMPACTED BY HAND EQUIPMENT TO SUBGRADES INDICATED AS FOLLOWS:

1. STRUCTURAL FILL: USE UNDER FOUNDATIONS, SLABS ON GRADE IN LAYERS AS INDICATED.

2. DRAINAGE FILL: USE UNDER DESIGNATED BUILDING SLABS, AT FOUNDATION DRAINAGE AND ELSEWHERE AS INDICATED.

3. COMMON FILL: USE UNDER UNPAVED AREAS.

4. SUBBASE MATERIAL: USE UNDER GENERAL COMPOUND AREA. IF THICKNESS OF LIFT IS GREATER THAN 6 SPREAD AND COMPACT THE CRUSHED STONE IN MULTIPLE LIFTS OF EQUAL THICKNESS WITH A MAXIMUM LIFT OF 6"

F. GRADE TO 1/2" ABOVE OR BELOW REQUIRED SUBGRADE AND TO A TOLERANCE OF 1/4" IN 10'-0".

G. PROTECT NEWLY GRADED AREAS FROM TRAFFIC AND EROSION. RE-COMPACT AND RE-GRADE SETTLED, DISTURBED AND DAMAGED AREAS TO RESTORE QUALITY, APPEARANCE, AND CONDITION.

H. CONTROL EROSION TO PREVENT RUNOFF INTO SEWERS OR DAMAGE TO AREAS.

I. CONTROL DUST TO PREVENT HAZARDS TO ADJACENT PROPERTIES AND VEHICLES. IMMEDIATELY REPAIR OR REMEDY DAMAGE CAUSED BY DUST INCLUDING AIR FILTERS IN EQUIPMENT AND VEHICLES. CLEAN SOILED SURFACES.

J. DISPOSE OF WASTE AND UNSUITABLE MATERIALS OFF-SITE IN A LEGAL MANNER.

3.2 BACKFILL:

A. AS SOON AS PRACTICAL AFTER COMPLETING CONSTRUCTION OF THE RELATED STRUCTURE, INCLUDING THE SPECIFIED MINIMUM CURING PERIOD FOR CAST-IN-PLACE CONCRETE, BACKFILL THE EXCAVATION WITH APPROVED MATERIAL TO RESTORE THE REQUIRED FINISHED GRADE.

1. PRIOR TO PLACING BACKFILL AROUND STRUCTURES, ALL FORMS SHALL HAVE BEEN REMOVED AND THE EXCAVATION CLEANED OF ALL TRASH, DEBRIS, AND UNSUITABLE MATERIALS.

2. BACKFILL BY PLACING AND COMPACTING SUITABLE BACKFILL MATERIAL OR SELECT GRANULAR BACKFILL MATERIAL, WHEN REQUIRED IN UNIFORM HORIZONTAL LAYERS OF NO GREATER THAN 8" LOOSE THICKNESS. WHERE HAND OPERATED COMPACTORS ARE USED, THE FILL MATERIAL SHALL BE PLACED IN LIFTS NOT TO EXCEED 4" IN LOOSE DEPTH.

3. IF THE DENSITY TESTING INDICATES THAT THE SPECIFIED DENSITY, THE SUCCEEDING LAYER SHALL NOT BE PLACED UNTIL THE SPECIFICATION REQUIREMENTS ARE MET UNLESS AUTHORIZED BY THE GEO-TECHNICAL ENGINEER. THE CONTRACTOR SHALL TAKE WHATEVER APPROPRIATE ACTION IS NECESSARY TO OBTAIN PROPER COMPACTION.

B. COMPACT EACH LAYER OF BACKFILL TO A MINIMUM OF 95% OF THE MAXIMUM DRY DENSITY AS PROVIDED BY THE STANDARD PROCTOR TEST, ASTM D 698.

3.3 TRENCH EXCAVATION:

A. UTILITY TRENCHES SHALL BE EXCAVATED TO THE LINES AND GRADES SHOWN ON THE DRAWINGS OR AS DIRECTED BY THE OWNER OR HIS AGENT. PROVIDE SHORING, SHEETING AND BRACING AS REQUIRED TO PREVENT CAVING OR SLOUGHING OF THE TRENCH WALLS.

B. EXTEND THE TRENCH WIDTH A MINIMUM OF 6" BEYOND THE OUTSIDE EDGE OF THE OUTER-MOST CONDUIT.

C. WHEN SOFT, YIELDING, OR OTHERWISE UNSTABLE SOIL CONDITIONS ARE ENCOUNTERED, BACKFILL AT THE REQUIRED TRENCH TO A DEPTH OF NO LESS THAN 12" BELOW THE REQUIRED ELEVATION AND BACKFILL WITH GRANULAR BEDDING MATERIAL.

3.4 TRENCH BACKFILL:

A. PROVIDE GRANULAR BEDDING MATERIAL (WELL GRADED SAND) IN ACCORDANCE WITH THE DRAWINGS AND THE UTILITY REQUIREMENTS.

B. NOTIFY THE OWNER OR HIS AGENT 24 HOURS IN ADVANCE OF BACKFILLING.

C. CONDUCT UTILITY CHECK TESTS BEFORE BACKFILLING. BACKFILL AND COMPACT TRENCH BEFORE ACCEPTANCE TESTING.

D. PLACE GRANULAR TRENCH BACKFILL UNIFORMLY ON BOTH SIDES OF THE CONDUITS IN 6" UNCOMPACTED LIFTS UNTIL 6" OVER THE CONDUITS. SOLIDLY RAM AND TAMP BACKFILL INTO SPACES AROUND CONDUITS.

E. PROTECT CONDUIT FROM LATERAL MOVEMENT, IMPACT DAMAGE, OR UNBALANCED LOADING.

F. ABOVE THE CONDUIT EMBEDMENT ZONE, PLACE AND COMPACT BACKFILL MATERIAL IN 8" MAXIMUM LOOSE THICKNESS LIFTS TO RESTORE THE REQUIRED FINISHED SURFACE GRADE.

G. COMPACT FINAL TRENCH BACKFILL TO A DENSITY EQUAL TO OR GREATER THAN EXISTING UNDISTURBED MATERIAL ADJACENT TO THE TRENCH BUT NO LESS THAN A MINIMUM OF 95% OF THE MAXIMUM DRY DENSITY AS PROVIDED BY THE STANDARD PROCTOR TEST, ASTM D 698.

3.5 AGGREGATE ACCESS ROAD (IF APPLICABLE):

A. CLEAR, GRUB, STRIP AND EXCAVATE FOR ACCESS ROAD TO THE LINES AND GRADES INDICATED ON DRAWINGS. SCARIFY TO A DEPTH OF 6" AND PROOF-ROLL ALL HOLES, RUTS, SOFT PLACES AND OTHER DEFECTS.

B. THE ENTIRE SUBGRADE SHALL BE COMPACTED TO NOT LESS THAN 95% OF THE MAXIMUM DRY DENSITY AS PROVIDED BY THE STANDARD PROCTOR TEST, ASTM D 1557.

C. AFTER PREPARATION OF THE SUBGRADE IS COMPLETE, THE GEOTEXTILE FABRIC (MIRAFI 500X) SHALL BE INSTALLED TO THE LIMITS INDICATED ON DRAWINGS BY ROLLING THE FABRIC OUT LONGITUDINALLY ALONG ROADWAY. THE FABRIC SHALL NOT BE DRAGGED ACROSS THE SUBGRADE. PLACE THE ENTIRE ROLL IN A SINGLE OPERATION, AS SMOOTHLY AS POSSIBLE.

1. OVERLAPS PARALLEL TO THE ROADWAY WILL BE PERMITTED AT THE CENTERLINE AND AT LOCATIONS BEYOND THE ROADWAY SURFACE WIDTH. NO LONGITUDINAL OVERLAPS SHALL BE LOCATED BETWEEN THE CENTERLINE AND THE SHOULDER. PARALLEL OVERLAPS SHALL BE A MINIMUM OF 3'-0" WIDE.

2. TRANSVERSE OR PERPENDICULAR OVERLAPS AT THE END OF A ROLL SHALL OVERLAP IN THE DIRECTION OF THE AGGREGATE PLACEMENT (PREVIOUS ROLL ON TOP) AND SHALL HAVE A MINIMUM LENGTH OF 3'-0".

3. ALL OVERLAPS SHALL BE PINNED WITH STAPLES OR NAILS BETWEEN 10" AND 12" LONG TO INSURE POSITIONING DURING PLACEMENT OF AGGREGATE. PIN LONGITUDINAL SEAMS AT 25'-0" O.C. AND TRANSVERSE SEAMS EVERY 5'-0" O.C.

D. THE AGGREGATE BASE AND SURFACE COURSES SHALL BE CONSTRUCTED IN LAYERS NOT MORE THAN 6" (COMPACTED) THICKNESS. AGGREGATE TO BE PLACED ON GEOTEXTILE FABRIC AND SHALL BE END-DUMPED ON THE FABRIC FROM THE FREE END OF THE FABRIC OR OVER PREVIOUSLY PLACED AGGREGATE. AT NO TIME SHALL EQUIPMENT BE PERMITTED ON THE ROADWAY WITH LESS THAN 6" OF MATERIAL COVERING THE FABRIC.

E. THE AGGREGATE SHALL BE IMMEDIATELY COMPACTED TO NOT LESS THAN 95% OF THE MAXIMUM DRY DENSITY AS PROVIDED BY THE PROCTOR TEST, ASTM D 1557 WITH A TAMPING ROLLER, A PNEUMATIC-TIRED ROLLER, OR WITH A VIBRATORY MACHINE OR ANY COMBINATION OF THE ABOVE. THE TOP LAYER SHALL BE GIVEN A FINAL ROLLING WITH A THREE-WHEEL OR TANDEM ROLLER.

3.6 FINISH GRADING:

A. PERFORM ALL GRADING TO PROVIDE SMOOTH, EVEN SURFACE DRAINAGE OF THE ENTIRE AREA WITHIN THE LIMITS OF CONSTRUCTION. GRADING SHALL BE COMPATIBLE WITH ALL SURROUNDING TOPOGRAPHY AND STRUCTURES.

B. UTILIZE SATISFACTORY FILL MATERIALS RESULTING FROM THE EXCAVATION WORK IN THE CONSTRUCTION OF FILLS, EMBANKMENTS AND FOR THE REPLACEMENT OF REMOVED UNSUITABLE MATERIALS.

C. ACHIEVE FINISHED GRADE BY PLACING A MINIMUM OF 6" OF AB 3 ON TOP OF SOIL STABILIZER FABRIC.

D. REPAIR ALL ACCESS ROADS AND SURROUNDING AREAS USED DURING THE COURSE OF THIS WORK TO THEIR ORIGINAL CONDITION.

END OF SECTION

STAMP:

8/30/2024

LICENSED PROFESSIONAL ENGINEER
SHELTON D. KEISLING
062.069129
OF ILLINOIS

Docusigned by:
Shelton Keisling
EF94D8A5B80B407...

ENGINEERING LICENSE:
STATE OF ILLINOIS
PE CERTIFICATE OF AUTHORIZATION # 184.003404

ENGINEER:		PE#:	DISCIPLINE:	
SDK	SHELTON D. KEISLING	062-069129	ELECTRICAL	E
TMS	TERRANCE M. SUPER	062-052514	ELECTRICAL	E

PLANS PREPARED FOR:

RIVIAN

PLANS PREPARED BY:

SSC

DRAWING NOTICE:
THIS DRAWING HAS NOT BEEN PUBLISHED AND IS THE SOLE PROPERTY OF SSC, INC. AND IS LENT TO THE BORROWER FOR THEIR CONFIDENTIAL USE ONLY, AND IN CONSIDERATION OF THE LOAN OF THIS DRAWING, THE BORROWER PROMISES AND AGREES TO RETURN IT UPON REQUEST AND AGREES THAT IT WILL NOT BE REPRODUCED, COPIED, LENT OR OTHERWISE DISPOSED OF DIRECTLY OR INDIRECTLY, NOR USED FOR ANY PURPOSE OTHER THAN FOR WHICH IT IS FURNISHED.

SUBMITTALS:

DESCRIPTION	DATE	BY	REV
ISSUED FOR CONSTRUCTION	03/30/23	DWO	0
TRAILER STALL REVISED	04/11/23	TX	1
REVISED PER CLIENT COMMENTS	12/20/23	IBA	2
REVISED PER CLIENT COMMENTS	04/23/24	IBA	3
REVISED PER AHJ COMMENTS	08/30/24	IBA	4

APPLICANT SITE NAME:
OAK BROOK

SSC SITE NUMBER:
IL-00002

SITE ADDRESS:
100 OAK BROOK CENTER,
STE. EV
OAK BROOK, IL 60523

SHEET DESCRIPTION:
SPECIFICATIONS
(3 OF 5)

SHEET #:
SP-1.2

Docusign Envelope ID: 54931469-A40F-46BD-84C4-27E801AD8D1A

ELECTRICAL

PART 1: GENERAL

1.1 GENERAL CONDITIONS:

A. THE CONTRACTOR SHALL INSPECT THE SITE WHERE THIS WORK IS TO BE PERFORMED AND FULLY FAMILIARIZE HIMSELF WITH ALL CONDITIONS RELATED TO THIS PROJECT.

B. THE CONTRACTOR SHALL OBTAIN AND PAY FOR ALL PERMITS AND LICENSES AND SHALL MAKE ALL DEPOSITS AND PAY ALL FEES REQUIRED FOR THE PERFORMANCE OF WORK UNDER THIS SECTION.

C. DRAWINGS SHOW THE GENERAL ARRANGEMENT OF ALL SYSTEMS AND COMPONENTS COVERED UNDER THIS SECTION. THE CONTRACTOR SHALL VERIFY ALL DIMENSIONS. DRAWINGS SHALL NOT BE SCALED TO DETERMINE DIMENSIONS.

1.2 LAWS, REGULATIONS, ORDINANCES, STATUTES AND CODES:

A. ALL WORK SHALL BE INSTALLED IN ACCORDANCE WITH THE NATIONAL ELECTRICAL CODE, AND ALL APPLICABLE LOCAL LAWS, REGULATIONS, ORDINANCES, STATUTES AND CODES.

1.3 REFERENCES:

A. THE PUBLICATIONS LISTED BELOW FORM PART OF THIS SPECIFICATION. EACH PUBLICATION SHALL BE THE LATEST REVISION AND ADDENDUM IN EFFECT ON THE DATE THIS SPECIFICATION IS ISSUED FOR CONSTRUCTION UNLESS NOTED OTHERWISE. EXCEPT AS MODIFIED BY THE REQUIREMENTS SPECIFIED HEREIN OR THE DETAILS OF THE DRAWINGS, WORK INCLUDED IN THIS SPECIFICATION SHALL CONFORM TO THE APPLICABLE PROVISIONS OF THESE PUBLICATIONS.

1. NEC (NATIONAL ELECTRICAL CODE)
2. ANSI/IEEE (AMERICAN NATIONAL STANDARDS INSTITUTE)
3. IEEE (INSTITUTE OF ELECTRICAL AND ELECTRONICS ENGINEERS)
4. ASTM (AMERICAN SOCIETY FOR TESTING AND MATERIALS)
5. ICEA (INSULATED CABLE ENGINEERS ASSOCIATION)
6. NEMA (NATIONAL ELECTRICAL MANUFACTURER'S ASSOCIATION)
7. NFPA (NATIONAL FIRE PROTECTION ASSOCIATION)
8. OSHA (OCCUPATIONAL SAFETY AND HEALTH ADMINISTRATION)
9. UL (UNDERWRITERS LABORATORIES, INC.)

1.4 SCOPE OF WORK:

A. WORK UNDER THIS SECTION SHALL CONSIST OF FURNISHING ALL LABOR, MATERIAL AND ASSOCIATED SERVICES REQUIRED TO COMPLETELY CONSTRUCT AND LEAVE READY FOR OPERATION SYSTEMS AS SHOWN ON THE DRAWINGS AND HEREIN DESCRIBED.

B. ALL ELECTRICAL EQUIPMENT UNDER THIS CONTRACT SHALL BE PROPERLY TESTED, ADJUSTED, AND ALIGNED BY THE CONTRACTOR.

C. THE CONTRACTOR SHALL BE RESPONSIBLE FOR ALL EXCAVATING, DRAINING, TRENCHES, BACKFILLING, AND REMOVAL OF EXCESS DIRT.

D. THE CONTRACTOR SHALL FURNISH TO THE OWNER, CERTIFICATES OF FINAL INSPECTION AND APPROVAL FROM THE INSPECTION AUTHORITIES HAVING JURISDICTION.

PART 2: PRODUCTS

2.1 GENERAL:

A. ALL ITEMS OF MATERIALS AND EQUIPMENT SHALL BE NEW, FREE FROM DEFECTS AND OF THE BEST QUALITY NORMALLY USED FOR THE PURPOSE IN GOOD COMMERCIAL PRACTICE.

B. ALL MATERIALS AND EQUIPMENT SHALL BE ACCEPTABLE TO THE AUTHORITY HAVING JURISDICTION AS SUITABLE FOR THE USE INTENDED.

C. ALL EQUIPMENT SHALL BEAR THE UNDERWRITERS LABORATORIES LABEL OF APPROVAL, AND SHALL CONFORM TO REQUIREMENTS OF THE NATIONAL ELECTRICAL CODE.

D. ALL OVERCURRENT DEVICES SHALL HAVE AN INTERRUPTING RATING EQUAL TO OR GREATER THAN THE SHORT CIRCUIT CURRENT TO WHICH THEY ARE SUBJECTED, 10,000 AIC MINIMUM. VERIFY AVAILABLE SHORT CIRCUIT CURRENT DOES NOT EXCEED THE RATING OF ELECTRICAL EQUIPMENT.

2.2 MATERIALS AND EQUIPMENT:

A. CONDUIT:

1. RIGID GALVANIZED STEEL CONDUIT (RGS) SHALL BE HOT-DIP GALVANIZED INSIDE AND OUTSIDE INCLUDING ENDS AND THREADS AND ENAMELED OR LACQUERED INSIDE IN ADDITION TO GALVANIZING.
2. FLEXIBLE METAL CONDUIT SHALL BE GALVANIZED, ZINC-COATED STEEL, PVC COATED FOR OUTDOOR APPLICATIONS.
3. CONDUIT CLAMPS, STRAPS AND SUPPORTS SHALL BE STEEL OR MALLEABLE IRON. ALL FITTINGS SHALL BE COMPRESSION TYPE AND WATERTIGHT.
4. NON-METALLIC CONDUIT AND FITTINGS SHALL BE SCHEDULE 40 PVC, HEAVY-WALL RIGID WITH SOLVENT-CEMENT-TYPE JOINTS AS RECOMMENDED BY THE MANUFACTURER.

B. WIRE AND CABLE:

1. WIRE AND CABLE SHALL BE FLAME-RETARDANT, MOISTURE AND HEAT RESISTANT THERMOPLASTIC, SINGLE CONDUCTOR, COPPER, TYPE THHN/THWN, 600 VOLT, SIZES AS INDICATED, #12 AWG MINIMUM.
2. #10 AWG AND SMALLER CONDUCTORS SHALL BE SOLID AND #8 AWG AND LARGER CONDUCTORS SHALL BE STRANDED.
3. SOLDERLESS, PRESSURE-TYPE CONNECTORS CONSTRUCTED OF HIGH-STRENGTH, NON-CORRODIBLE, TIN-PLATED COPPER DESIGNED TO FURNISH HIGH-PULLOUT STRENGTH AND HIGH CONDUCTIVITY JOINTS SHALL BE USED.
4. SUPPORT GRIPS SHALL BE SINGLE WEAVE, CLOSED MESH, HIGH-GRADE, NON-MAGNETIC, TIN-COATED BRONZE CAPABLE OF SUPPORTING TEN TIMES THE CABLE DEAD WEIGHT, HUBBELL KELLEMS OR APPROVED EQUAL.

C. DISCONNECT SWITCHES:

1. DISCONNECT SWITCHES SHALL BE HEAVY DUTY, DEAD-FRONT, QUICK-MAKE, QUICK-BREAK, EXTERNALLY OPERABLE, HANDLE LOCKABLE AND INTERLOCKED WITH COVER IN CLOSED POSITION, RATING AS INDICATED, UL LABELED FURNISHED IN NEMA 3R ENCLOSURE, SQUARE D CLASS 3110 OR APPROVED EQUAL.

D. SYSTEM GROUNDING:

1. GROUNDING CONDUCTOR SHALL BE SOLID TINNED BARE COPPER, SIZE AS INDICATED, EXCEPT ABOVE GROUND GROUNDING CONDUCTORS SHALL BE STRANDED INSULATED.
2. GROUND BUSSES SHALL BE GALVANIZED STEEL BARS OF RECTANGULAR CROSS SECTION.
3. CONNECTORS SHALL BE HIGH-CONDUCTIVITY, HEAVY DUTY, LISTED AND LABELED AS GROUNDING CONNECTORS FOR THE MATERIALS USED. USE TWO-HOLE COMPRESSION LUGS WITH HEAT SHRINK FOR MECHANICAL CONNECTIONS.
4. EXOTHERMIC WELDED CONNECTIONS SHALL BE PROVIDED IN KIT FORM AND SELECTED FOR THE SPECIFIC TYPES, SIZES, AND COMBINATIONS OF CONDUCTORS AND OTHER ITEMS TO BE CONNECTED.
5. GROUND RODS SHALL BE COPPER-CLAD STEEL WITH HIGH-STRENGTH STEEL CORE AND ELECTROLYTIC-GRADE COPPER OUTER SHEATH, MOLTEN WELDED TO CORE, 3/4" x 10'-0".

E. OTHER MATERIALS:

1. THE CONTRACTOR SHALL PROVIDE OTHER MATERIALS, THOUGH NOT SPECIFICALLY DESCRIBED, WHICH ARE REQUIRED FOR A COMPLETELY OPERATIONAL SYSTEM AND PROPER INSTALLATION OF THE WORK.

STAMP:

8/30/2024

LICENSED PROFESSIONAL ENGINEER
SHELTON D. KEISLING
062.069129
OF ILLINOIS

Docusigned by:
Shelton Keisling
EF94D8A5B80B407...

ENGINEERING LICENSE:
STATE OF ILLINOIS
PE CERTIFICATE OF AUTHORIZATION # 184.003404

ENGINEER:		PE#:	DISCIPLINE:	
SDK	SHELTON D. KEISLING	062-069129	ELECTRICAL	E
TMS	TERRANCE M. SUPER	062-052514	ELECTRICAL	E

PLANS PREPARED FOR:

RIVIAN

PLANS PREPARED BY:

SSC

DRAWING NOTICE:
THIS DRAWING HAS NOT BEEN PUBLISHED AND IS THE SOLE PROPERTY OF SSC, INC. AND IS LENT TO THE BORROWER FOR THEIR CONFIDENTIAL USE ONLY, AND IN CONSIDERATION OF THE LOAN OF THIS DRAWING, THE BORROWER PROMISES AND AGREES TO RETURN IT UPON REQUEST AND AGREES THAT IT WILL NOT BE REPRODUCED, COPIED, LENT OR OTHERWISE DISPOSED OF DIRECTLY OR INDIRECTLY, NOR USED FOR ANY PURPOSE OTHER THAN FOR WHICH IT IS FURNISHED.

SUBMITTALS:

DESCRIPTION	DATE	BY	REV
ISSUED FOR CONSTRUCTION	03/30/23	DWO	0
TRAILER STALL REVISED	04/11/23	TX	1
REVISED PER CLIENT COMMENTS	12/20/23	IBA	2
REVISED PER CLIENT COMMENTS	04/23/24	IBA	3
REVISED PER AHJ COMMENTS	08/30/24	IBA	4

APPLICANT SITE NAME:
OAK BROOK

SSC SITE NUMBER:
IL-00002

SITE ADDRESS:
100 OAK BROOK CENTER,
STE. EV
OAK BROOK, IL 60523

SHEET DESCRIPTION:
SPECIFICATIONS
(4 OF 5)

SHEET #:
SP-2.0

Docusign Envelope ID: 54931469-A40F-46BD-84C4-27E801AD8D1A

PART 3: EXECUTION

3.1 GENERAL:

A. ALL MATERIALS AND EQUIPMENT SHALL BE INSTALLED IN STRICT ACCORDANCE WITH THE MANUFACTURER'S RECOMMENDATIONS.

B. EQUIPMENT SHALL BE TIGHTLY COVERED AND PROTECTED AGAINST DIRT OR WATER, AND AGAINST CHEMICAL OR MECHANICAL INJURY DURING INSTALLATION AND CONSTRUCTION PERIODS.

3.2 LABOR AND WORKMANSHIP:

A. ALL LABOR FOR THE INSTALLATION OF MATERIALS AND EQUIPMENT FURNISHED FOR THE ELECTRICAL SYSTEM SHALL BE DONE BY EXPERIENCED MECHANICS OF THE PROPER TRADES.

B. ALL ELECTRICAL EQUIPMENT FURNISHED SHALL BE ADJUSTED, ALIGNED AND TESTED BY THE CONTRACTOR AS REQUIRED TO PRODUCE THE INTENDED PERFORMANCE.

C. UPON COMPLETION OF THE WORK, THE CONTRACTOR SHALL THOROUGHLY CLEAN ALL EXPOSED EQUIPMENT, REMOVE ALL LABELS AND ANY DEBRIS, CRATING OR CARTONS AND LEAVE THE INSTALLATION FINISHED AND READY FOR OPERATION.

3.3 COORDINATION:

A. THE CONTRACTOR SHALL COORDINATE THE INSTALLATION OF ELECTRICAL ITEMS WITH THE OWNER–FURNISHED EQUIPMENT DELIVERY SCHEDULE TO PREVENT UNNECESSARY DELAYS IN THE TOTAL WORK.

3.4 INSTALLATION:

A. CONDUIT:

1. ALL ELECTRICAL WIRING SHALL BE INSTALLED IN CONDUIT AS HEREIN SPECIFIED. NO CONDUIT OR TUBING OF LESS THAN 3/4" NOMINAL SIZE SHALL BE USED.
2. PROVIDE RGS CONDUIT FOR ALL EXPOSED, EXTERIOR CONDUIT.
3. PROVIDE SCHEDULE 40 PVC OR RGS CONDUIT BELOW GRADE, 1" MINIMUM, UNLESS NOTED OTHERWISE. ALL 90 DEGREE BENDS TO ABOVE GRADE SHALL BE RGS. MINIMUM BURIAL DEPTH SHALL BE 24" CLEAR TO TOP OF CONDUIT, UNLESS NOTED OTHERWISE.
4. USE GALVANIZED FLEXIBLE STEEL CONDUIT WHERE DIRECT CONNECTION IS NOT DESIRABLE FOR REASONS OF EQUIPMENT MOVEMENT, VIBRATION, OR FOR EASE OF MAINTENANCE. USE LIQUIDTIGHT, PVC COATED FLEXIBLE METAL CONDUIT FOR OUTDOOR APPLICATIONS.
5. INSTALL GALVANIZED FLEXIBLE STEEL CONDUIT AT ALL POINTS OF CONNECTION TO EQUIPMENT MOUNTED ON SUPPORTS TO ALLOW FOR EXPANSION AND CONTRACTION.
6. A RUN OF CONDUIT BETWEEN BOXES OR FITTINGS SHALL NOT CONTAIN MORE THAN THE EQUIVALENT OF FOUR QUARTER–BENDS INCLUDING THOSE BENDS LOCATED IMMEDIATELY AT THE BOX OR FITTING. THE RADIUS OF BENDS SHALL NEVER BE SHORTER THAN THAT OF THE CORRESPONDING TRADE ELBOW.
7. WHERE CONDUIT HAS TO BE CUT IN THE FIELD, IT SHALL BE CUT SQUARE WITH A PIPE CUTTER USING CUTTING KNIVES.
8. ALL CONDUITS SHALL BE SWABBED CLEAN BY PULLING AN APPROPRIATE SIZE MANDREL THROUGH THE CONDUIT BEFORE INSTALLATION OF WIRE OR CABLE. CLEAR ALL BLOCKAGES AND REMOVE BURRS, DIRT, AND DEBRIS.
9. INSTALL PULL STRINGS IN ALL EMPTY CONDUITS. IDENTIFY PULL STRINGS AT EACH END WITH ITS DESTINATION.
10. PROVIDE INSULATED GROUNDING BUSHINGS FOR ALL CONDUITS STUBBED INTO EQUIPMENT ENCLOSURES OR STUBBED OUT FOR FUTURE USE BY OTHERS.
11. CONTRACTOR IS RESPONSIBLE FOR PROTECTING ALL CONDUITS DURING CONSTRUCTION. TEMPORARY OPENINGS IN THE CONDUIT SYSTEM SHALL BE PLUGGED OR CAPPED TO PREVENT ENTRANCE OF MOISTURE OR FOREIGN MATTER. CONTRACTOR SHALL REPLACE ANY CONDUITS CONTAINING FOREIGN MATERIALS THAT CANNOT BE REMOVED.
12. INSTALL 2" ORANGE DETECTABLE TAPE 12" ABOVE ALL UNDERGROUND CONDUIT AND WIRE.
13. CONDUITS SHALL BE INSTALLED IN SUCH A MANNER AS TO INSURE AGAINST COLLECTION OF TRAPPED CONDENSATION.
14. WHERE CONDUITS CONTAIN CONDUCTORS, SEAL BOTH ENDS WATERTIGHT USING DUCT SEAL OR AN EQUIVALENT SEALING COMPOUND.

B. WIRE AND CABLE:

1. ALL POWER WIRING SHALL BE COLOR CODED AS FOLLOWS:

DESCRIPTION	120/240V	208Y/120V	480Y/277V
PHASE A	BLACK	BLACK	BROWN
PHASE B	RED	RED	ORANGE
PHASE C		BLUE	YELLOW
NEUTRAL	WHITE	WHITE	GRAY
GROUND	GREEN	GREEN	GREEN

2. SPLICES SHALL BE MADE ONLY AT OUTLETS, JUNCTION BOXES, OR ACCESSIBLE RACEWAYS WITH PRESSURE–TYPE CONNECTORS.
3. PULLING LUBRICANTS SHALL BE SOAPSTONE POWDER, POWDERED TALC, OR A COMMERCIAL PULLING COMPOUND. NO SOAP SUDS, SOAP FLAKES, OIL, OR GREASE SHALL BE USED, AS THESE MAY BE HARMFUL TO CABLE INSULATION. CONTRACTOR SHALL USE NYLON OR HEMP ROPE FOR PULLING CABLE TO AVOID SCORING THE CONDUIT.
4. CABLES SHALL BE NEATLY TRAINED, WITHOUT INTERLACING, AND BE OF SUFFICIENT LENGTH IN ALL BOXES, EQUIPMENT, ETC. TO PERMIT MAKING A NEAT ARRANGEMENT. CABLES SHALL BE SECURED IN A MANNER TO AVOID TENSION ON CONDUCTORS OR TERMINALS, AND SHALL BE PROTECTED FROM MECHANICAL INJURY AND FROM MOISTURE. SHARP BENDS OVER CONDUIT BUSHINGS ARE PROHIBITED. DAMAGED CABLES SHALL BE REMOVED AND REPLACED AT THE CONTRACTOR'S EXPENSE.

C. DISCONNECT SWITCHES:

1. INSTALL DISCONNECT SWITCHES LEVEL AND PLUMB. CONNECT TO WIRING SYSTEM AND GROUND AS INDICATED.

D. GROUNDING:

1. ALL METALLIC PARTS OF ELECTRICAL EQUIPMENT WHICH DO NOT CARRY CURRENT SHALL BE GROUNDED IN ACCORDANCE WITH THE REQUIREMENTS OF ARTICLE 250 OF THE NATIONAL ELECTRICAL CODE.
2. PROVIDE ELECTRICAL GROUNDING AND BONDING SYSTEMS INDICATED WITH ASSEMBLY OF MATERIALS, INCLUDING GROUNDING ELECTRODES, BONDING JUMPERS AND ADDITIONAL ACCESSORIES AS REQUIRED FOR A COMPLETE INSTALLATION.
3. ROUTE GROUNDING CONNECTIONS AND CONDUCTORS TO GROUND IN THE SHORTEST AND STRAIGHTEST PATHS POSSIBLE TO MINIMIZE TRANSIENT VOLTAGE RISES.
4. TIGHTEN GROUNDING AND BONDING CONNECTORS, INCLUDING SCREWS AND BOLTS, IN ACCORDANCE WITH MANUFACTURER'S PUBLISHED TORQUE TIGHTENING VALUES FOR CONNECTORS AND BOLTS. WHERE MANUFACTURER'S TORQUING REQUIREMENTS ARE NOT AVAILABLE, TIGHTEN CONNECTIONS TO COMPLY WITH TIGHTENING TORQUE VALUES SPECIFIED IN UL 486A TO ASSURE PERMANENT AND EFFECTIVE GROUNDING.
5. ALL UNDERGROUND GROUNDING CONNECTIONS SHALL BE MADE BY THE EXOTHERMIC WELD PROCESS AND INSTALLED IN ACCORDANCE WITH THE MANUFACTURER'S INSTRUCTIONS.
6. ALL GROUNDING CONNECTIONS SHALL BE INSPECTED FOR TIGHTNESS. CONNECTIONS SHALL BE APPROVED BY THE CONSTRUCTION INSPECTOR BEFORE BEING PERMANENTLY CONCEALED.
7. APPLY CORROSION–RESISTANT FINISH TO FIELD CONNECTIONS, AND PLACES WHERE FACTORY APPLIED PROTECTIVE COATINGS HAVE BEEN DESTROYED. USE COPPER–BASED "NO–OX" OR APPROVED EQUAL.
8. A SEPARATE, CONTINUOUS, INSULATED EQUIPMENT GROUNDING CONDUCTOR SHALL BE INSTALLED IN ALL FEEDER AND BRANCH CIRCUITS
9. BOND ALL INSULATED GROUNDING BUSHINGS WITH A BARE #6 AWG GROUNDING CONDUCTOR TO A GROUND BUS OR GROUNDING LUG IN ENCLOSURE.
10. DIRECT BURIED GROUND CONDUCTORS SHALL BE INSTALLED AT A NOMINAL DEPTH OF 30" BELOW GRADE, UNLESS NOTED OTHERWISE.
11. ALL GROUNDING CONDUCTORS EMBEDDED IN OR PENETRATING CONCRETE SHALL BE INSULATED OR INSTALLED IN PVC CONDUIT.
12. INSTALL ELECTROLYTIC GROUNDING SYSTEM IN STRICT ACCORDANCE WITH MANUFACTURER'S INSTRUCTIONS. REMOVE SEALING TAPE FROM LEACHING AND BREATHER HOLES. INSTALL PROTECTIVE BOX FLUSH WITH GRADE.
13. DRIVE GROUND RODS UNTIL TOPS ARE 30" BELOW FINAL GRADE.
14. GROUNDING CONDUCTOR TO EQUIPMENT GROUND LUGS:
    a. BOLTED TO EQUIPMENT HOUSING WITH STAINLESS STEEL BOLTS AND LOCK WASHERS.
    b. ALL EQUIPMENT TO BE GROUNDED SHALL BE FREE OF PAINT OR ANY OTHER MATERIAL COVERING BARE METAL AT THE POINT OF CONNECTION.

3.5 ACCEPTANCE TESTING:

A. PROVIDE PERSONNEL AND EQUIPMENT, MAKE REQUIRED TESTS, AND SUBMIT TEST REPORTS UPON COMPLETION OF TESTS.

B. WHEN MATERIAL AND/OR WORKMANSHIP IS FOUND NOT TO COMPLY WITH THE SPECIFIED REQUIREMENTS, THE NONCOMPLYING ITEMS SHALL BE REMOVED FROM THE JOBSITE AND REPLACED WITH ITEMS COMPLYING WITH THE SPECIFIED REQUIREMENTS PROMPTLY AFTER RECEIPT OF NOTICE OF SUCH NON–COMPLIANCE.

C. TEST PROCEDURES:

1. ALL FEEDERS SHALL HAVE THEIR INSULATION TESTED AFTER INSTALLATION, BUT BEFORE CONNECTION TO DEVICES. THE CONDUCTORS SHALL TEST FREE FROM SHORT CIRCUITS AND GROUNDS. TESTING SHALL BE FOR ONE MINUTE USING 1000V DC. INVESTIGATE ANY VALUES LESS THAN 50 MEGAOHMS.
2. PRIOR TO ENERGIZING CIRCUITRY, TEST WIRING DEVICES FOR ELECTRICAL CONTINUITY AND PROPER POLARITY CONNECTIONS.
3. MEASURE AND RECORD VOLTAGES BETWEEN PHASES AND BETWEEN PHASE WIRES AND NEUTRALS. SUBMIT A REPORT OF MAXIMUM AND MINIMUM VOLTAGES.
4. PERFORM GROUND TEST TO MEASURE GROUND RESISTANCE OF GROUNDING SYSTEM USING THE IEEE STANDARD 3–POINT "FALL–OF–POTENTIAL" METHOD. PROVIDE PLOTTED TEST VALUES & LOCATION SKETCH. NOTIFY THE ENGINEER IMMEDIATELY IF MEASURED VALUE IS OVER 5 OHMS.

END OF SECTION

END OF SPECIFICATION

STAMP:

8/30/2024

LICENSED PROFESSIONAL ENGINEER
SHELTON D. KEISLING
062.069129
OF ILLINOIS

Docusigned by:
Shelton Keisling
EF94D8A5B80B407...

ENGINEERING LICENSE:
STATE OF ILLINOIS
PE CERTIFICATE OF AUTHORIZATION # 184.003404

ENGINEER:		PE#:	DISCIPLINE:	
SDK	SHELTON D. KEISLING	062-069129	ELECTRICAL	E
TMS	TERRANCE M. SUPER	062-052514	ELECTRICAL	E

PLANS PREPARED FOR:

RIVIAN

PLANS PREPARED BY:

SSC

DRAWING NOTICE:

THIS DRAWING HAS NOT BEEN PUBLISHED AND IS THE SOLE PROPERTY OF SSC, INC. AND IS LENT TO THE BORROWER FOR THEIR CONFIDENTIAL USE ONLY, AND IN CONSIDERATION OF THE LOAN OF THIS DRAWING, THE BORROWER PROMISES AND AGREES TO RETURN IT UPON REQUEST AND AGREES THAT IT WILL NOT BE REPRODUCED, COPIED, LENT OR OTHERWISE DISPOSED OF DIRECTLY OR INDIRECTLY, NOR USED FOR ANY PURPOSE OTHER THAN FOR WHICH IT IS FURNISHED.

SUBMITTALS:

DESCRIPTION	DATE	BY	REV
ISSUED FOR CONSTRUCTION	03/30/23	DWO	0
TRAILER STALL REVISED	04/11/23	TX	1
REVISED PER CLIENT COMMENTS	12/20/23	IBA	2
REVISED PER CLIENT COMMENTS	04/23/24	IBA	3
REVISED PER AHJ COMMENTS	08/30/24	IBA	4

APPLICANT SITE NAME:

OAK BROOK

SSC SITE NUMBER:

IL-00002

SITE ADDRESS:

100 OAK BROOK CENTER,
STE. EV
OAK BROOK, IL 60523

SHEET DESCRIPTION:

SPECIFICATIONS
(5 OF 5)

SHEET #:

SP-2.1

Docusign Envelope ID: 54931469-A40F-46BD-84C4-27E801AD8D1A

Rivian DCFC Hardware System

KEY FEATURES

Standard CCS connector
Chargers capable of 300kW and output voltages up to 1,000V
Energy-efficient design via custom-developed Silicon Carbide power electronics
Cloud-connected automated diagnostics
Mobile app provides property location and GPS navigation to charger, charger status, and notifications
Over-the-air firmware updates
ADA compliant
ETL certification pending

Adventure Charger

Power Cabinet

TECHNICAL SPECIFICATIONS

NOMINAL INPUT

Phases / Lines	3 Phase: L1, L2, L3, GND (no neutral)
Voltage	480Y/277 VAC 3-Wire, 3 Ø
Frequency	60 Hz
Full Load Amps	448A
Interrupt Rating	65kA
Power factor	0.99
Efficiency @ full power	≥ 94%

DC OUTPUT

Voltage range	200-1,000VDC
Dispenser current	500A
Power (peak / continuous)	300 kW / 300 kW

DIMENSIONS & WEIGHT

Dispenser	(H) 1,765 x (D) 595 x (W) 390 mm	120 kg
Power Cabinet	(H) 2,362 x (D) 1,219 x (W) 1,118 mm	1,178 kg

Ingress protection	IP 55, outdoor use
Network connections	4G LTE, 100BASE-T ethernet
Vehicle communication	DIN 70121, ISO 15118 (CCS / Combo-1)
Environment operating temperature	-35 ˚C to 50 ˚C
HV Terminal & Conductor Rating	90 ˚C

RIVIAN

12.10.2021

Docusign Envelope ID: 54931469-A40F-46BD-84C4-27E801AD8D1A

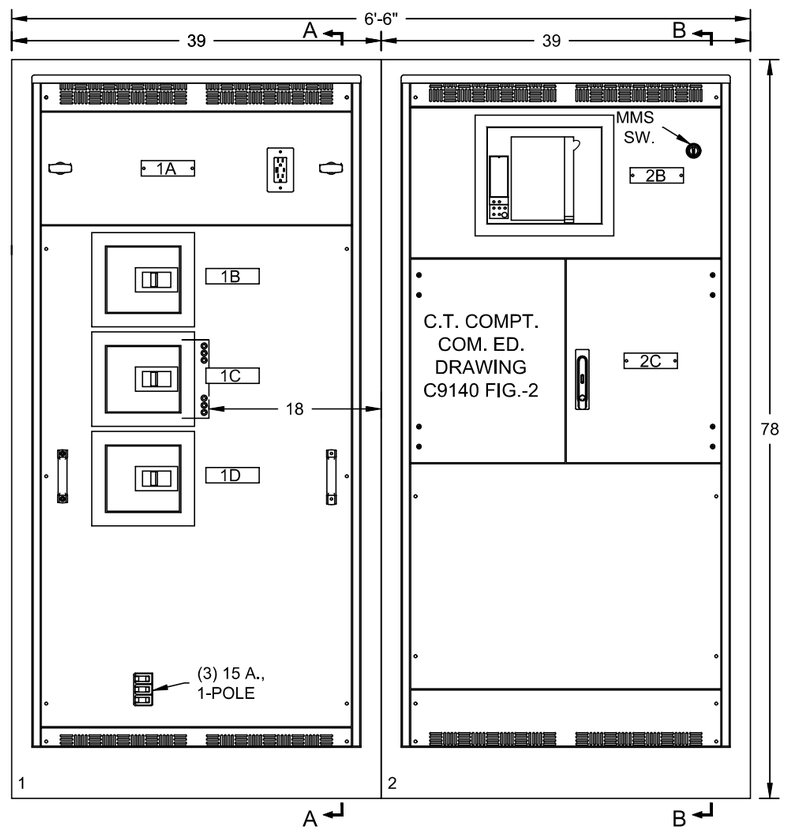

PRODUCT DESCRIPTION & RATINGS:

PRODUCT TYPE

- EV-2 (SERVICE SWITCHBOARD)
- LEVEL 3 CHARGING

UTILITY INFORMATION

- COM-ED [SEE DRAWING LEPCO-JXC-HS]
- METER BEFORE DISCONNECT (HOT SEQUENCE)

POWER SYSTEM DATA

- 3Ø, 4W., 480Y/277 VOLTS
- INCOMING - SECTION 2, BOTTOM FEED

BUS SYSTEM DATA

- 1600A. SILVER PLATED COPPER MAIN BUS
- DENSITY RATED AT 1000A PER SQUARE INCH
- 98% CONDUCTIVITY RATED IN ACCORDANCE w/ UL891
- BRACED FOR 65,000 AMPS (rms) SHORT CIRCUIT CURRENT
- (1) 1/4" X 2" CU GROUND BUS

ENCLOSURE DATA

- CODE GAUGE, FORMED COVERS & DOORS
- ENCLOSURE SHALL CONFORM TO INGRESS PROTECTION REQUIREMENTS IN ACCORDANCE WITH NEMA 3R RATING.
- EXTERIOR HARDWARE TO BE TAMPER-RESISTANT S.S. SCREWS.
- DOOR HANDLES ARE EQUIPPED WITH PADLOCK HASP.
- FINISH SHALL BE: ☒ WHITE (STANDARD) ☐ GRAY ☐ GREEN
- FRONT ACCESSIBLE ONLY

CODE STANDARDS

- UL891

LUGS

- CU/AL MECHANICAL

NAMEPLATES

- LAMICOID TYPE, WHITE w/BLACK LETTERS.

ACCESSORIES

- ENCLOSURE HEATERS W/ HYGROSTAT CONTROL
- DOUBLE PADLOCK HASP ON EXTERIOR DOOR [CUB-2]

REFERENCES:

- SECTION VIEWS SEE SHT-06
- FOR NAMEPLATE DESIGNATIONS SEE 'SERVICE SWITCHBOARD SCHEDULE' SHT-03

LINCOLN ELECTRIC PRODUCTS CO., INC. 947 LEHIGH AVENUE, UNION, NJ 07083 WWW.LE1949.COM MAIN (908) 688-2900	CUSTOMER	PROJECT	DRAWING TITLE	EQUIPMENT DESIGNATION	CHECKED BY	DRAWN BY	DATE	SHEET NUMBER
	RIVIAN AUTOMOTIVE, LLC.	DCFC ADVENTURE NETWORK CHARGING STATION 100 OAKBROOK CENTER OAK BROOK, IL	FRONT VIEW	EV-2	-	LC	11/16/2021	1 OF 7

SHORT CIRCUIT RATING	VOLTAGE	AMPERAGE	SYSTEM	BUS MATERIAL	ENCLOSURE	REV	DRAWING NUMBER
65kA. RMS	480Y/277V AC	1600A	3ϕ, 4W	COPPER	NEMA-3R	0	R-XXXXXXX

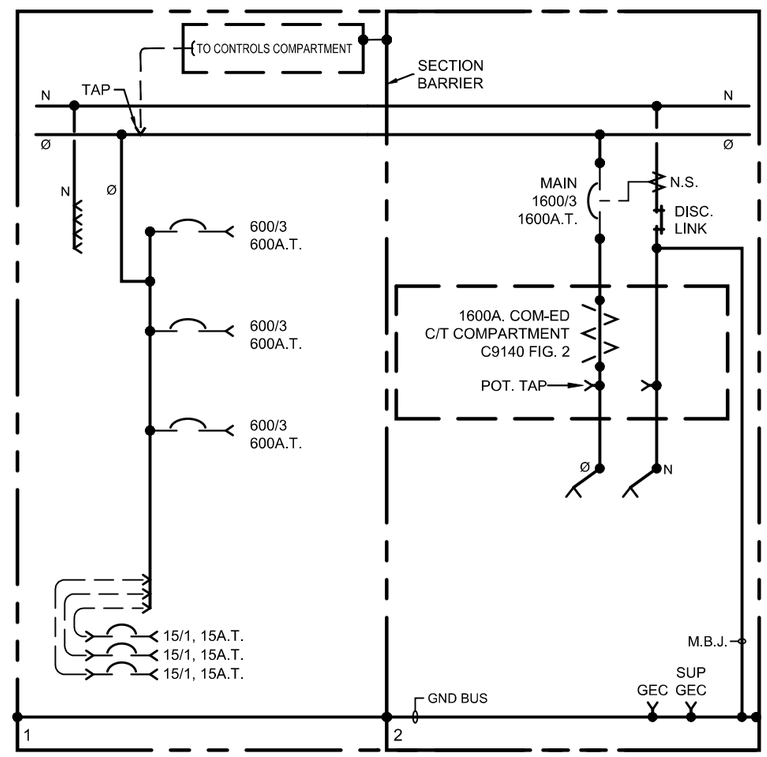

1600A SERVICE SWITCHBOARD

REFERENCES:

- FOR CONTROLS COMPARTMENT &120/240V. SUB-PANEL DETAILS SEE SHT-07

LINCOLN ELECTRIC PRODUCTS CO., INC. 947 LEHIGH AVENUE, UNION, NJ 07083 WWW.LE1949.COM MAIN (908) 688-2900	CUSTOMER	PROJECT	DRAWING TITLE	EQUIPMENT DESIGNATION		CHECKED BY	DRAWN BY	DATE		SHEET NUMBER	
	RIVIAN AUTOMOTIVE, LLC.	DCFC ADVENTURE NETWORK CHARGING STATION 100 OAKBROOK CENTER OAK BROOK, IL	ONE-LINE DIAGRAM	EV-2		-	LC	11/16/2021		2 OF 7	
			SHORT CIRCUIT RATING	VOLTAGE	AMPERAGE	SYSTEM	BUS MATERIAL	ENCLOSURE	REV	DRAWING NUMBER	
			65kA. RMS	480Y/277V AC	1600A	3ϕ, 4W	COPPER	NEMA-3R	0	R-XXXXXXX	

SERVICE SWITCHBOARD SCHEDULE

CUB. LOCN.	DESIGNATION	DEVICE MANUFACTURER	FRAME RATING	TRIP RATING/ TYPE	# OF POLES	DEVICE CAT. NO.	LUG INFORMATION					CABLE CONDUCTOR MATERIAL	CABLE ENTRY	NOTES
							QTY.	PHASES	NEUTRAL	GROUND	TYPE			
1A	CONTROLS COMPARTMENT													
1B	CHARGING CABINET #1	SCHNEIDER	600/3 'MJP'	600A LI	3	MJP36600YP	2	#3/0-500 KCMIL	-	#6-350 KCMIL	MECHANICAL	ALUMINUM [CU GND]	BOTTOM	- PADLOCK HASP (CAT. #: S32631) - DOOR ESCUTCHEON (CAT. #: S33718) - MECHANICAL LUGS (CAT. #: AL800M23K)
1C	CHARGING CABINET #2	SCHNEIDER	600/3 'MJP'	600A LI	3	MJP36600YP	2	#3/0-500 KCMIL	-	#6-350 KCMIL	MECHANICAL	ALUMINUM [CU GND]	BOTTOM	
1D	CHARGING CABINET #3	SCHNEIDER	600/3 'MJP'	600A LI	3	MJP36600YP	2	#3/0-500 KCMIL	-	#6-350 KCMIL	MECHANICAL	ALUMINUM [CU GND]	BOTTOM	
1	SPARE	SCHNEIDER	15/1 'BJ'	15A	1	BJL16015	1	#14-3/0 AWG	#14 - 1/0 AWG	#14 - 1/0 AWG	MECHANICAL	-	BOTTOM	
1	SPARE	SCHNEIDER	15/1 'BJ'	15A	1	BJL16015	1	#14-3/0 AWG	#14 - 1/0 AWG	#14 - 1/0 AWG	MECHANICAL	-	BOTTOM	
1	SPARE	SCHNEIDER	15/1 'BJ'	15A	1	BJL16015	1	#14-3/0 AWG	#14 - 1/0 AWG	#14 - 1/0 AWG	MECHANICAL	-	BOTTOM	
2	G.E.C.	-	-	-	-	-	2	-	-	#6-350 KCMIL	MECHANICAL	COPPER	BOTTOM	-
2	INCOMING	-	-	-	-	-	5	#2-600 KCMIL	#2-600 KCMIL	-	MECHANICAL	ALUMINUM	BOTTOM	-
2A	SERVICE SWITCHBOARD 1600A., 3Ø, 4W., 480Y/277V	-	-	-	-	-	-	-	-	-	-	-	-	- DOUBLE PADLOCK HASP ON EXTERIOR DOOR [SQ-D CAT. NO. SS-2-PL]
2B	1600A. COM-ED C.T. COMPT. C9140 FIG. 2	-	-	-	-	-	-	-	-	-		BUS CONNECTED	-	-
2C	MAIN SERVICE DISCONNECT	SCHNEIDER	1600/3 'NW'	1600A LSIG	3	WL1EEV64A3SXXXXXAZ	-	-	-	-	-	BUS CONNECTED	-	- MMS (MAINTENANCE MODE SWITCH) - PADLOCK HASP - DOOR ESCUTCHEON (CAT. #: S33929) - NEUTRAL SENSOR (CAT. #: S34036)

LINCOLN ELECTRIC PRODUCTS CO., INC.
947 LEHIGH AVENUE, UNION, NJ 07083
WWW.LE1949.COM MAIN (908) 688-2900

CUSTOMER	PROJECT	DRAWING TITLE	EQUIPMENT DESIGNATION	CHECKED BY	DRAWN BY	DATE	SHEET NUMBER
RIVIAN AUTOMOTIVE, LLC.	DCFC ADVENTURE NETWORK CHARGING STATION 100 OAKBROOK CENTER OAK BROOK, IL	SCHEDULE	EV-2	-	LC	11/16/2021	3 OF 7

SHORT CIRCUIT RATING	VOLTAGE	AMPERAGE	SYSTEM	BUS MATERIAL	ENCLOSURE	REV	DRAWING NUMBER
65kA. RMS	480Y/277V AC	1600A	3ϕ, 4W	COPPER	NEMA-3R	0	R-XXXXXXX

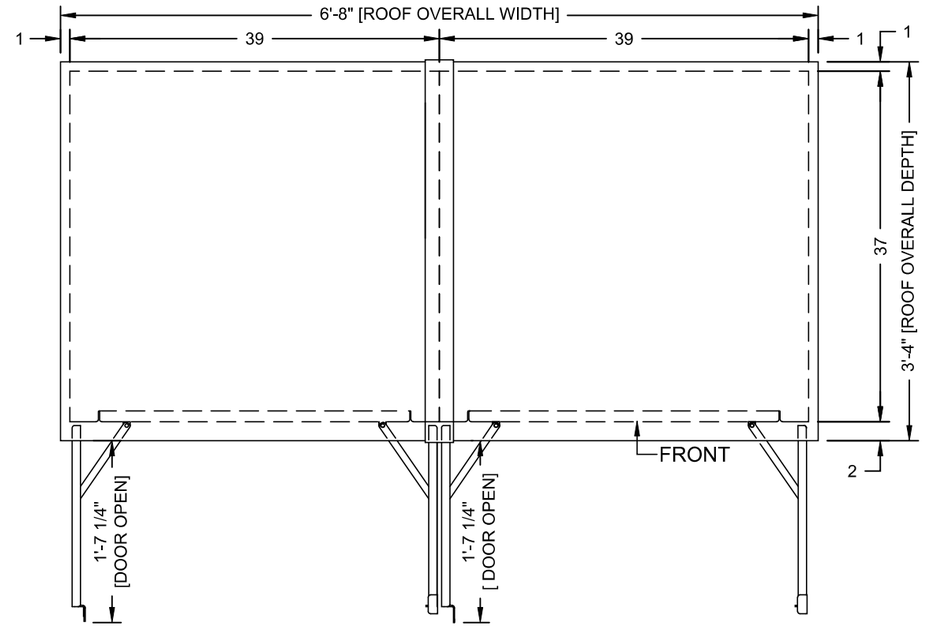

PLAN VIEW
DOORS OPEN

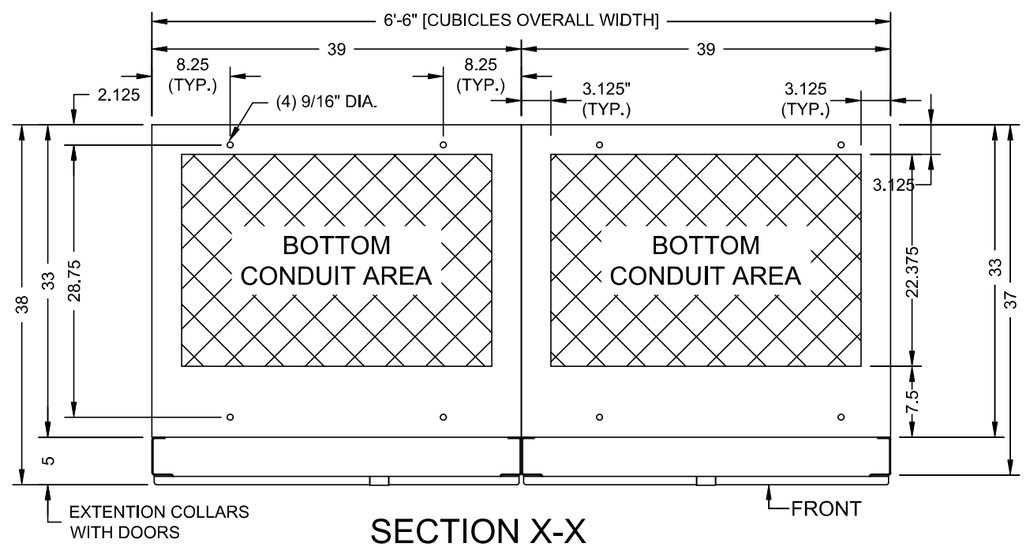

SECTION X-X
ANCHOR BOLT LOCATIONS & BOTTOM CONDUIT AREAS

LINCOLN ELECTRIC
PRODUCTS CO., INC.
947 LEHIGH AVENUE, UNION, NJ 07083
WWW.LE1949.COM MAIN (908) 688-2900

CUSTOMER	PROJECT	DRAWING TITLE	EQUIPMENT DESIGNATION	CHECKED BY	DRAWN BY	DATE	SHEET NUMBER
RIVIAN AUTOMOTIVE, LLC.	DCFC ADVENTURE NETWORK CHARGING STATION 100 OAKBROOK CENTER OAK BROOK, IL	PLAN VIEW	EV-2	-	LC	11/16/2021	4 OF 7

SHORT CIRCUIT RATING	VOLTAGE	AMPERAGE	SYSTEM	BUS MATERIAL	ENCLOSURE	REV	DRAWING NUMBER
65kA. RMS	480Y/277V AC	1600A	3ϕ, 4W	COPPER	NEMA-3R	0	R-XXXXXXX

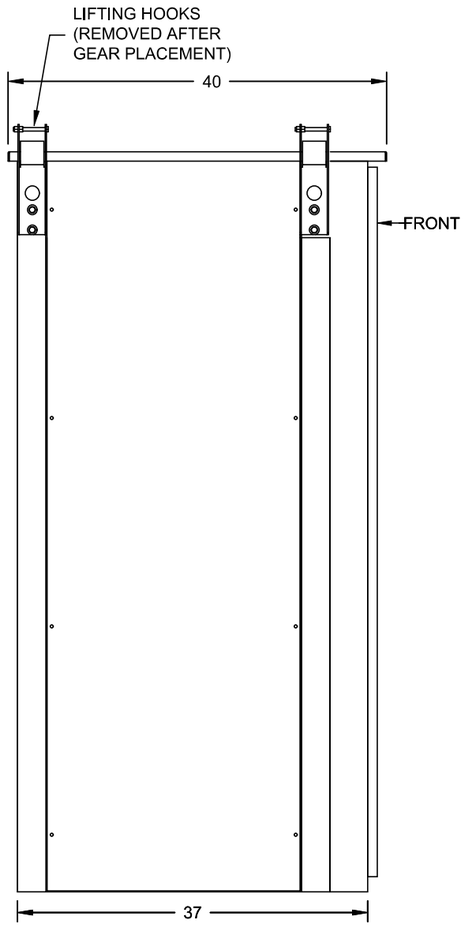

LEFT-SIDE VIEW - NEMA 3R
(END SECTION)

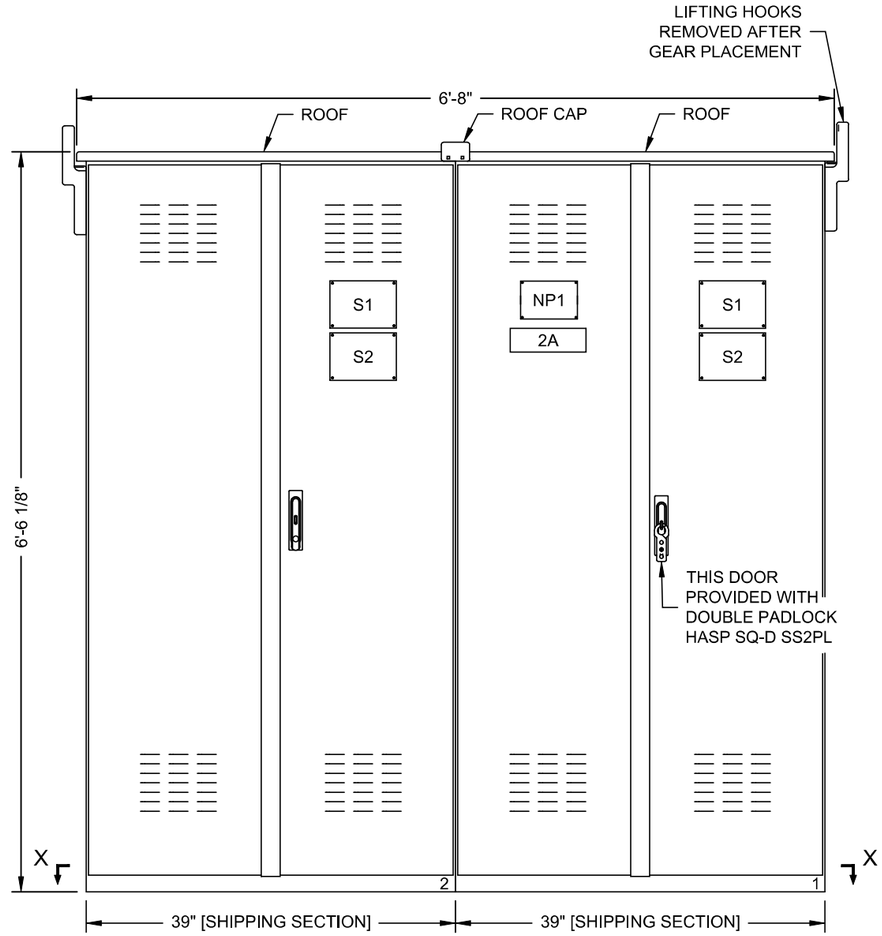

FRONT VIEW - NEMA 3R
(EXTERIOR DOORS SHOWN)

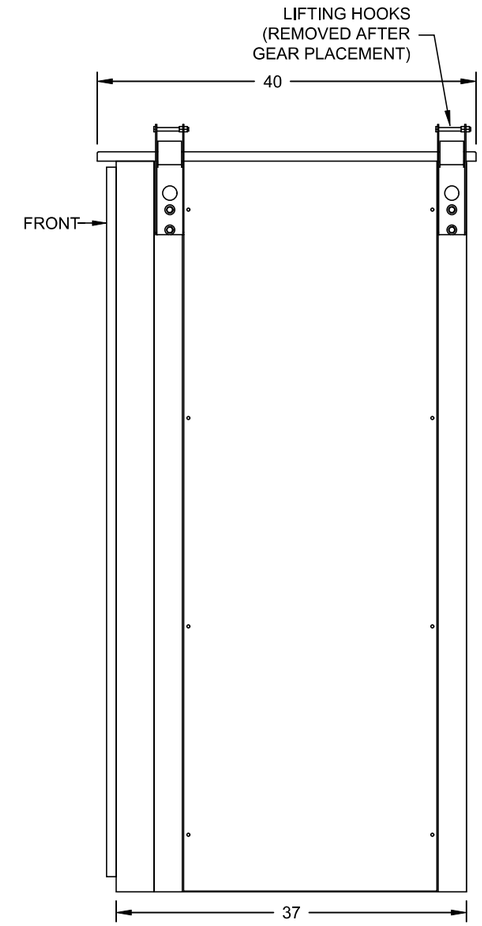

RIGHT-SIDE VIEW - NEMA 3R
(END SECTION)

SIGNAGE:

NP1 -LINCOLN NAMEPLATE (2.5" x 8" ALUMINUM)
S1 -DANGER 480 VOLTS (BI-LINGUAL)
S2 -DANGER ARC FLASH (BI-LINGUAL)

REFERENCES:

- FOR NAMEPLATE DESIGNATIONS SEE 'SERVICE SWITCHBOARD SCHEDULE' SHT-03
- FOR SECTION VIEW 'X-X' SEE SHT-06

LINCOLN ELECTRIC
PRODUCTS CO., INC.
947 LEHIGH AVENUE, UNION, NJ 07083
WWW.LE1949.COM MAIN (908) 688-2900

CUSTOMER	PROJECT	DRAWING TITLE	EQUIPMENT DESIGNATION	CHECKED BY	DRAWN BY	DATE	SHEET NUMBER
RIVIAN AUTOMOTIVE, LLC.	DCFC ADVENTURE NETWORK CHARGING STATION 100 OAKBROOK CENTER OAK BROOK, IL	EXTERIOR VIEWS	EV-2	-	LC	11/16/2021	5 OF 7

SHORT CIRCUIT RATING	VOLTAGE	AMPERAGE	SYSTEM	BUS MATERIAL	ENCLOSURE	REV	DRAWING NUMBER
65kA. RMS	480Y/277V AC	1600A	3ϕ, 4W	COPPER	NEMA-3R	0	R-XXXXXXX

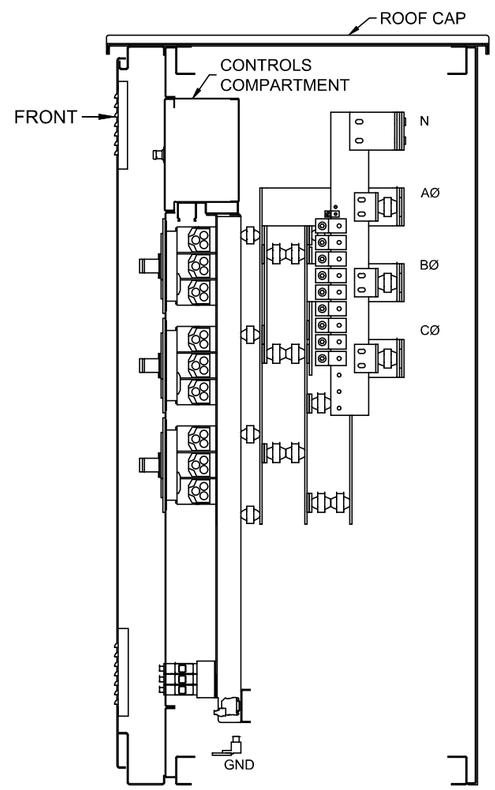

SECTION A-A

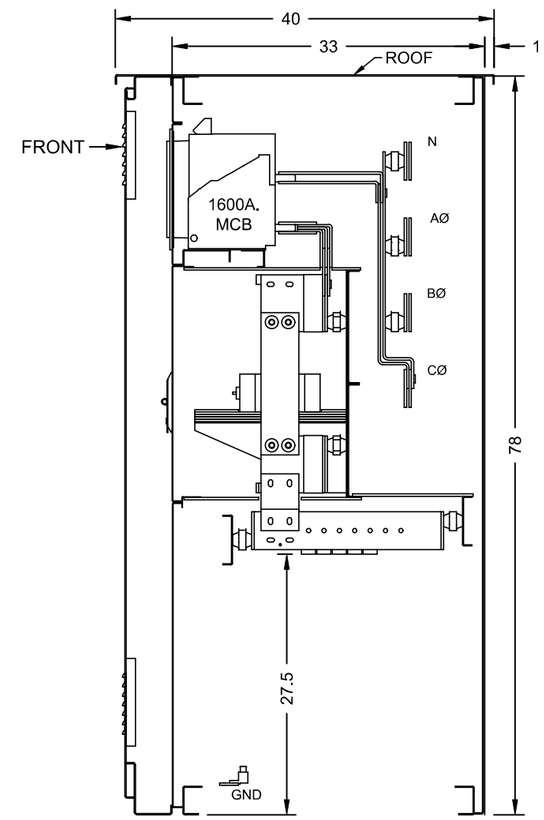

SECTION B-B

LINCOLN ELECTRIC PRODUCTS CO., INC. 947 LEHIGH AVENUE, UNION, NJ 07083 WWW.LE1949.COM MAIN (908) 688-2900	CUSTOMER	PROJECT	DRAWING TITLE	EQUIPMENT DESIGNATION	CHECKED BY	DRAWN BY	DATE	SHEET NUMBER	
	RIVIAN AUTOMOTIVE, LLC.	DCFC ADVENTURE NETWORK CHARGING STATION 100 OAKBROOK CENTER OAK BROOK, IL	SECTION VIEWS	EV-2	-	LC	11/16/2021	6 OF 7	
			SHORT CIRCUIT RATING	VOLTAGE	AMPERAGE	SYSTEM	BUS MATERIAL	ENCLOSURE	REV	DRAWING NUMBER
			65kA. RMS	480Y/277V AC	1600A	3ϕ, 4W	COPPER	NEMA-3R	0	R-XXXXXXX

Docusign Envelope ID: 54931469-A40F-46BD-84C4-27E801AD8D1A

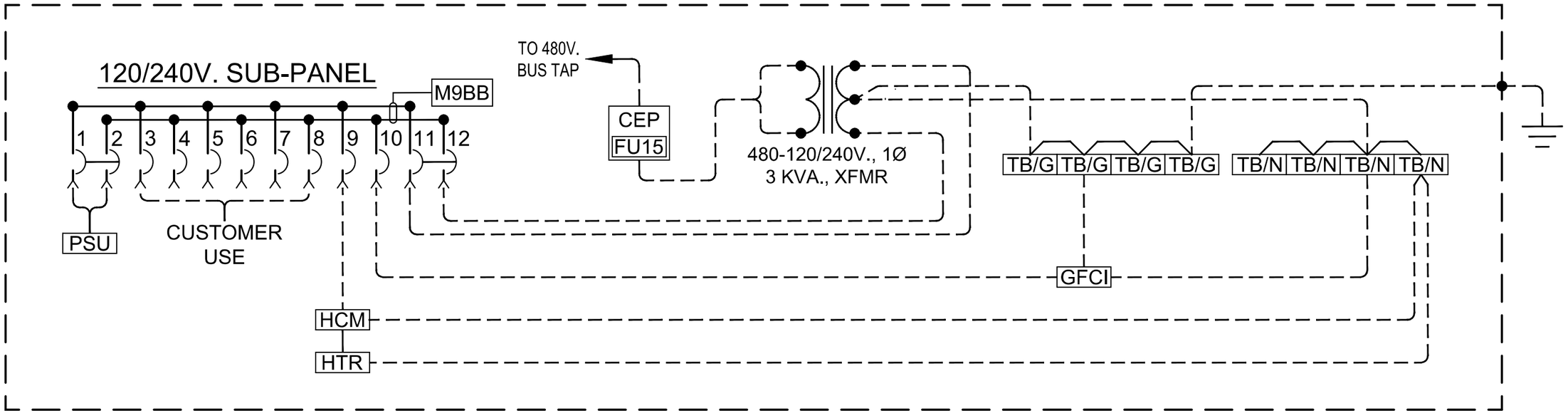

CONTROLS COMPARTMENT

THE ENCLOSED ASSEMBLY WILL BE LISTED UNDER UL891

120/240V. SUB-PANEL DEVICE LIST	
CKT	DEVICE
1-2	SCHNEIDER TYPE 'MULTI-9' MINATURE CIRCUIT BREAKER: 3A.TRIP, 2-POLE, 10k A.I.C. @ 240VAC [CAT. #: M9F42203]
3-8	SCHNEIDER TYPE 'MULTI-9' MINATURE CIRCUIT BREAKER: 10A. TRIP, 1-POLE, 10k A.I.C. @ 240VAC [CAT. #: M9F42110]
9	SCHNEIDER TYPE 'MULTI-9' MINATURE CIRCUIT BREAKER: 8A. TRIP, 1-POLE, 10k A.I.C. @ 240VAC [CAT. #: M9F42108]
10	SCHNEIDER TYPE 'MULTI-9' MINATURE CIRCUIT BREAKER: 15A. TRIP, 1-POLE, 10k A.I.C. @ 240VAC [CAT. #: M9F42115]
11-12	SCHNEIDER TYPE 'MULTI-9' MINATURE CIRCUIT BREAKER: 15A. TRIP, 2-POLE, 10k A.I.C. @ 240VAC [CAT. #: M9F42215]

LEGEND:

- CEP -COMPACT FUSED DISCONNECT SWITCH [MFR: MERSEN CAT. #CEP-2-30CC]
- FU15 -FUSE TYPE 'FNQ-R' [MFR: BUSSMANN CAT. #FNQ-R-15]
- GFCI -15A., 120V., GROUND FAULT CIRCUIT INTERRUPTER, DUPLEX RECEPTACLE, WITH USB-C & QC3.0 CHARGING PORTS.
- HCM -HYGROSTAT [MFR: STEGO CAT. # EFR-012]
- HTR -FINNED STRIP HEATER 350W @ 120V. [MFR: VULCAN CAT. #OSF1510-359A]
- M9BB -MULTI-9 BUSBAR [MFR: SCHNEIDER CAT. # M9XUP212]
- PSU -24VDC POWER SUPPLY UNIT [MFR: MEANWELL 120W. DC [CAT. # WDR-120-24]
- TB/G -TERMINAL BLOCK: GROUND (GREEN) [MFR: PHOENIX CONTACT CAT. # 3209582]
- TB/N -TERMINAL BLOCK: NEUTRAL (WHITE) [MFR: PHOENIX CONTACT CAT. # 3209579]

LINCOLN ELECTRIC
PRODUCTS CO., INC.
947 LEHIGH AVENUE, UNION, NJ 07083
WWW.LE1949.COM MAIN (908) 688-2900

CUSTOMER	PROJECT	DRAWING TITLE	EQUIPMENT DESIGNATION	CHECKED BY	DRAWN BY	DATE	SHEET NUMBER
RIVIAN AUTOMOTIVE, LLC.	DCFC ADVENTURE NETWORK CHARGING STATION 100 OAKBROOK CENTER OAK BROOK, IL	CONTROLS COMPARTMENT	EV-2	-	LC	11/16/2021	7 OF 7

SHORT CIRCUIT RATING	VOLTAGE	AMPERAGE	SYSTEM	BUS MATERIAL	ENCLOSURE	REV	DRAWING NUMBER
65kA. RMS	480Y/277V AC	1600A	3ϕ, 4W	COPPER	NEMA-3R	0	R-XXXXXXX

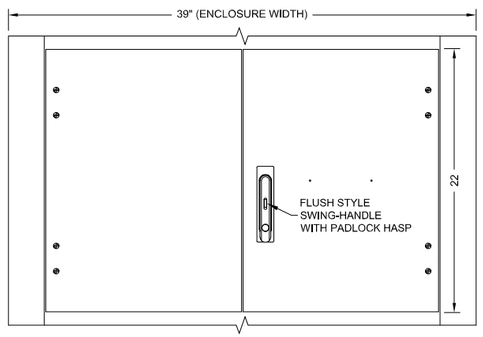

FRONT VIEW
(C/T COMPARTMENT DOUBLE-DOORS)

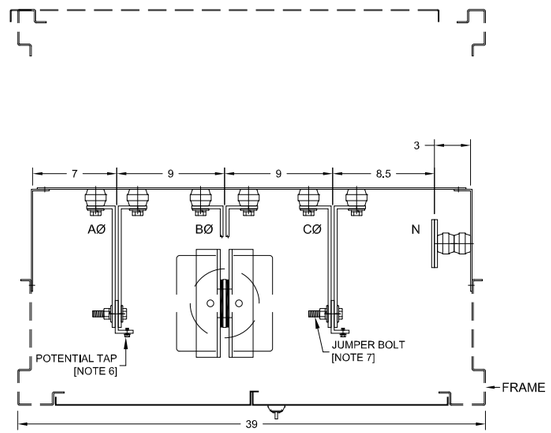

SECTION VIEW C-C

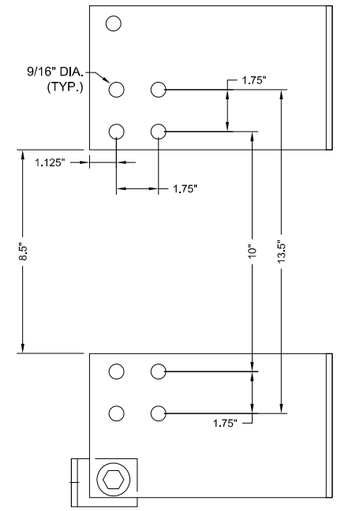

DETAIL X-X
C.T. BUS DRILLING DETAIL
(NOT TO SCALE)

NOTES:

1. BUS BARS SHALL BE SILVER PLATED COPPER, 98% CONDUCTIVITY.
2. BUS CONNECTION HARDWARE SHALL BE 1/2"-13, GRADE 5 CADMIUM PLATED STEEL WITH FLAT WASHERS, SPLIT-LOCK WASHERS & HEX NUT PROVIDED.
3. THE CURRENT TRANSFORMER COMPARTMENT SHALL BE SEPARATED FROM THE OTHER EQUIPMENT BY NON-VENTILATED HORIZONTAL BARRIERS. THE BARRIERS SHALL BE SECURELY FASTENED IN PLACE AND FABRICATED FROM 1/4" THICK GLASTIC.
4. THE ENCLOSURE HOUSING THE CT'S SHALL BE FABRICATED FROM 1/8" THICK ALUMINUM WITH THE EXCEPTION OF THE STRUCTURAL FRAME AND HORIZONTAL BARRIERS.
5. THE COMPARTMENT SHALL BE FURNISHED WITH A HINGED DOUBLE DOOR EQUIPPED WITH A THREE-POINT CATCH. THE DOOR HANDLE HASP SHALL ACCOMMODATE LOCKS WITH UP TO A 7/16" DIAMETER SHANK. THE DOORS SHALL SPAN THE OVERALL WIDTH OF THE CT COMPARTMENT. ADEQUATE SPACE SHALL BE PROVIDED ABOVE AND BELOW BUS JOINTS TO ALLOW DISCONNECTION OF BUS LINKS WITHOUT THE USE OF SPECIAL TOOLS.
6. POTENTIAL TAPS (#10-24 THREADED HOLES) SHALL BE PROVIDED FOR PHASE AND NEUTRAL BUSES ON THE LINE SIDE OF THE CT COMPARTMENT.
7. JUMPER BOLT SHALL BE 1/2"-13 THREADED EXTENSION OF BOLT USED TO FASTEN POTENTIAL TAP DETAIL. THE LONGEST AVAILABLE BOLT SHALL BE USED WHILE STILL PROVIDING ENOUGH THREADED LENGTH TO PROPERLY TORQUE THE DETAIL IN PLACE. ONLY THE BOLT LOCATED CLOSEST TO THE DOOR SHALL HAVE THE EXTENDED LENGTH. THIS SHALL BE LOCATED ON BOTH THE LINE AND LOAD SIDE OF THE COMPARTMENT.

PHASE & NEUTRAL
BUS SCHEDULE

SELECTION	BUS SIZE	# OF BARS	RATING
	1/4" x 4" COPPER	1	801-1000A.
✓	1/4" x 4" COPPER	2	MAX. 2000A.
	1/4" x 4" COPPER	3	MAX. 3000A.
	1/4" x 4" COPPER	4	MAX. 4000A.

ATTENTION INSTALLER

BEFORE ENERGIZING THIS EQUIPMENT TIGHTEN ALL ELECTRICAL CONNECTIONS TO THE TORQUE VALUES SHOWN BELOW:

BOLT SIZE	TORQUE IN FOOT-LBS
1/4"	7
5/16"	12
3/8"	20
1/2"	50

SWITCHBOARDS SHOULD BE INSPECTED AND MAINTAINED ONCE EACH YEAR IN ACCORDANCE WITH NEMA STANDARD PB 2.1. ALL ELECTRICAL CONNECTIONS SHOULD BE CHECKED AND TORQUED ANNUALLY.

BUS BOLTING TORQUE VALUES SHALL BE IDENTIFIED ON A PERMANENTLY AFFIXED LABEL WITHIN THE CT COMPARTMENT.

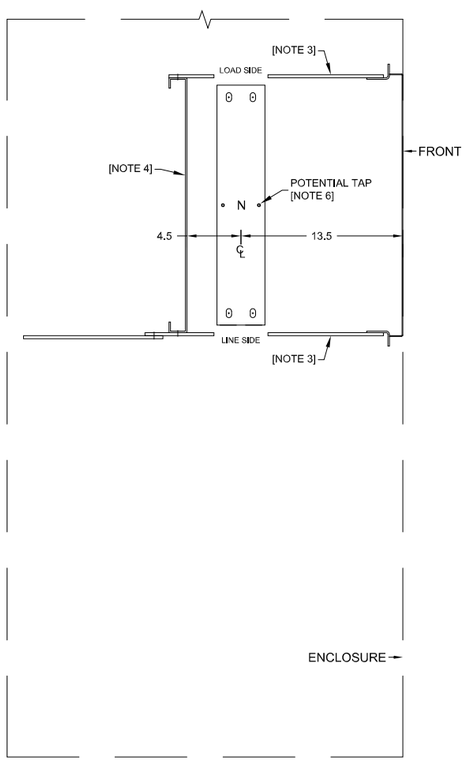

SECTION VIEW B-B
(NEUTRAL BUS)

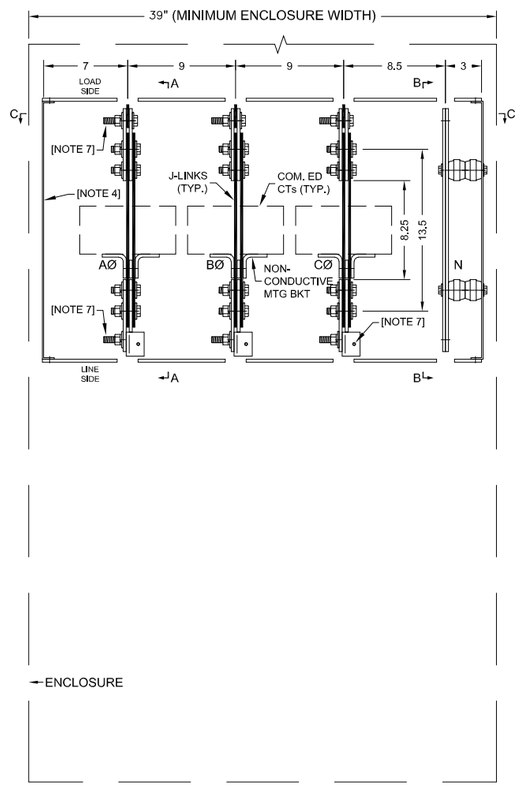

FRONT VIEW C.T. COMPARTMENT
(SHOWN WITHOUT ACCESS DOOR)

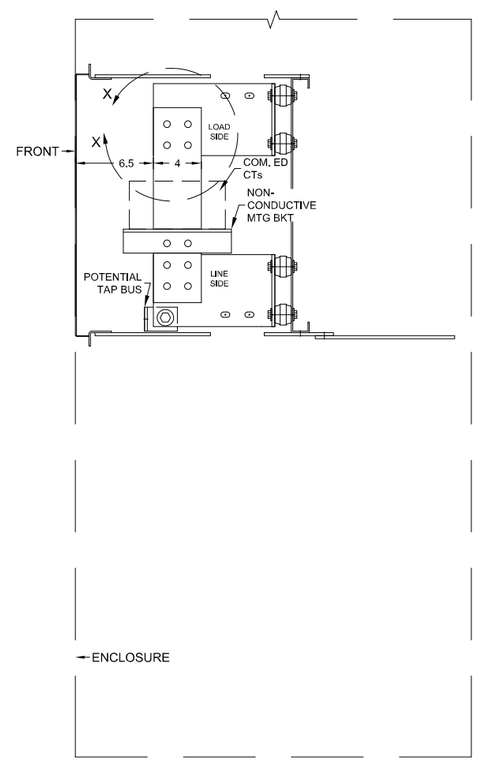

SECTION VIEW A-A
(PHASE BUS)

PROJECT: -
-
-

NO.	DESCRIPTION	BY	DATE
-	-	-	-

REVISIONS

DRAWN BY	DATE	DWG. SCALE	PLOT SCALE
JSS	6/08/2021	1-1/2" = 1'-0"	1=8

TITLE
CT CABINET DETAILS FOR
INSTALLATION OF 1600-2000 AMP.
BAR TYPE CURRENT TRANSFORMERS
UTILITY: COM. ED. (HOT SEQUENCE)

LINCOLN ELECTRIC PRODUCTS CO. INC.
947 LEHIGH AVENUE UNION, NJ 07083

REFERENCE COM-ED STANDARD	SHOP ORDER NO.	DRAWING NUMBER	REV.
C9140 FIG.-2	x-xxxxx	LEPCO-JXC-HS	0

Docusign Envelope ID: 54931469-A40F-46BD-84C4-27E801AD8D1A

RIVN-G-08-## SERIES

RIVIAN SINGLE AND DOUBLE GATE SERIES - 8FT TALL

TABLE 1: SINGLE GATE RIVN-G-08-0406-S CONFIGURATIONS

DESCRIPTION	RIVN-G-08-0406S	OPENING DIRECTION	ROUGH OPENING	ACTUAL OPENING	WEIGHT	HEIGHT
SINGLE GATE - 8FT TALL X 4FT WIDE - LEFT HAND	1	LEFT HAND OUTSWING	48"	43"	335LB	8FT
SINGLE GATE - 8FT TALL X 4FT WIDE - RIGHT HAND		RIGHT HAND OUTSWING				
SINGLE GATE - 8FT TALL X 5FT WIDE - LEFT HAND		LEFT HAND OUTSWING	60"	55"		
SINGLE GATE - 8FT TALL X 5FT WIDE - RIGHT HAND		RIGHT HAND OUTSWING				
SINGLE GATE - 8FT TALL X 6FT WIDE - LEFT HAND		LEFT HAND OUTSWING	72"	67"		
SINGLE GATE - 8FT TALL X 6FT WIDE - RIGHT HAND		RIGHT HAND OUTSWING				

TABLE 2: DOUBLE GATE RIV-G-08-0812-D CONFIGURATIONS

DESCRIPTION	RIVN-G-08-0406S	OPENGING DIRECTION	ROUGH OPENING	ACTUAL OPENING	WEIGHT	HEIGHT
DOUBLE GATE - 8FT TALL X 8FT WIDE	2	OUTSWING	96"	86"	640LB	8FT
DOUBLE GATE - 8FT TALL X 9FT WIDE			108"	98"		
DOUBLE GATE - 8FT TALL X 10FT WIDE			120"	110"		
DOUBLE GATE - 8FT TALL X 11FT WIDE			132"	122"		
DOUBLE GATE - 8FT TALL X 12FT WIDE			144"	134"		

TABLE 3: DOUBLE GATE RIV-G-08-80-D CONFIGURATIONS

DESCRIPTION	RIVN-G-08-80-S	OPENGING DIRECTION	ROUGH OPENING	ACTUAL OPENING	WEIGHT	HEIGHT
DOUBLE GATE - 8FT TALL X 80IN WIDE	2	OUTSWING	80"	70"	595LB	8FT

WEIGHTS DO NOT INCLUDE GATE PANELING OR MOUNTING HARDWARE (ANCHOR BOLTS/EPOXY)
18GA 1.5B GALVANIZED PANELING AVAILABLE SEPARATELY FROM PERFECTVISION

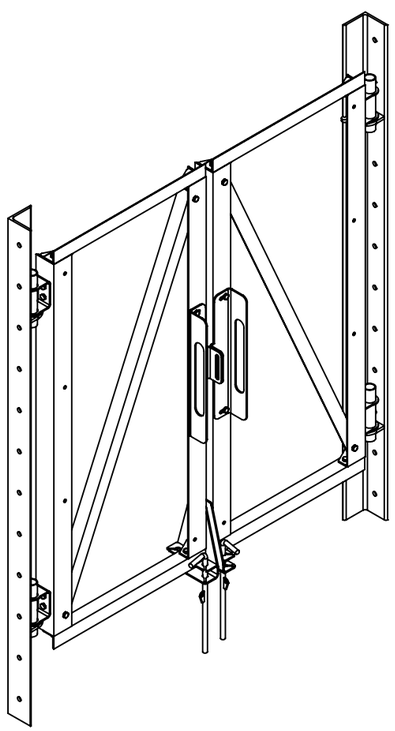

RIVN-G-08-80-D
DOUBLE OPENING GATE - 80IN WIDE

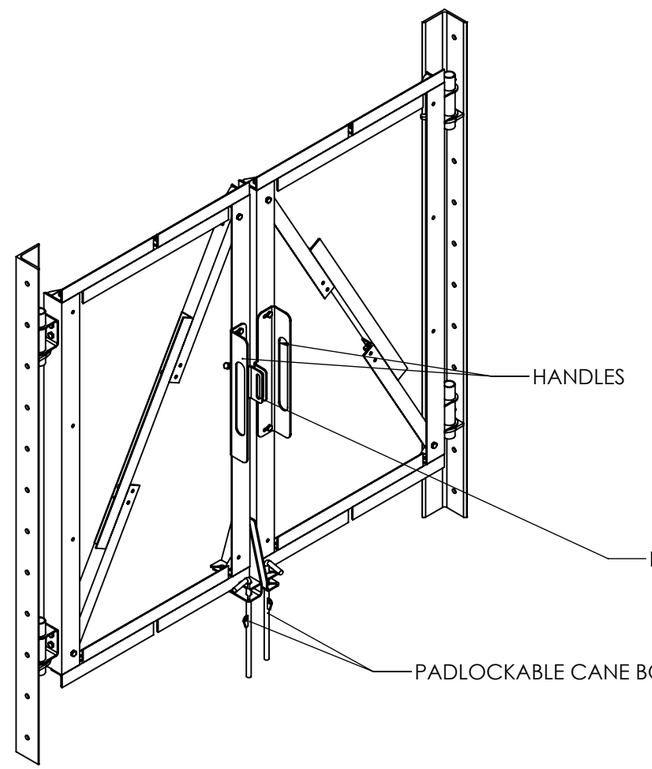

RIVN-G-08-0812-D
DOUBLE OPENING GATE - 8FT TO 12FT

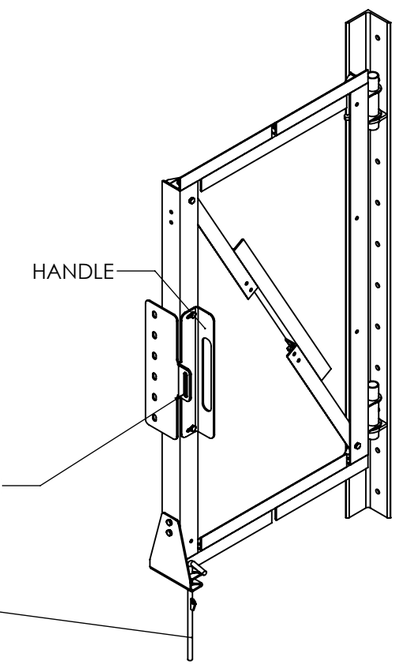

RIVN-G-08-0406-S
SINGLE OPENING GATE - 4FT TO 6FT

SHEET 1 OF 4	THIRD ANGLE PROJECTION	CATEGORY	4		
		SERIES	3		
3/29/2023	SCALE 1:24	TYPE	2		
DIMENSIONS ARE IN INCHES TOLERANCES U.N.O. HOLES: +1/16", -1/32" ANGULAR: PROFILE ±1/4°, BEND ±2° ALL OTHERS: ±1/16"		BY BSB	1	ADDED 80IN WIDE VERSION	3/29/2023
		CHECKED SJS	0	INITIAL RELEASE	3/6/2023
		STATUS	REV	DESCRIPTION	DATE

PERFECTVISION

RIVIAN GATE SERIES ENGINEERING DETAIL

DOCUMENT NUMBER RIVN-ENG-01 REV 1

C:\Users\brentons\Desktop\ADD TO SERVER WHEN BACK ON WIFI\RIV_Gate\

PROPRIETARY AND CONFIDENTIAL THE INFORMATION CONTAINED IN THIS DRAWING IS THE SOLE PROPERTY OF PERFECTVISION. ANY REPRODUCTION IN PART OR AS A WHOLE WITHOUT THE WRITTEN PERMISSION OF PERFECTVISION IS PROHIBITED.

Docusign Envelope ID: 54931469-A40F-46BD-84C4-27E801AD8D1A

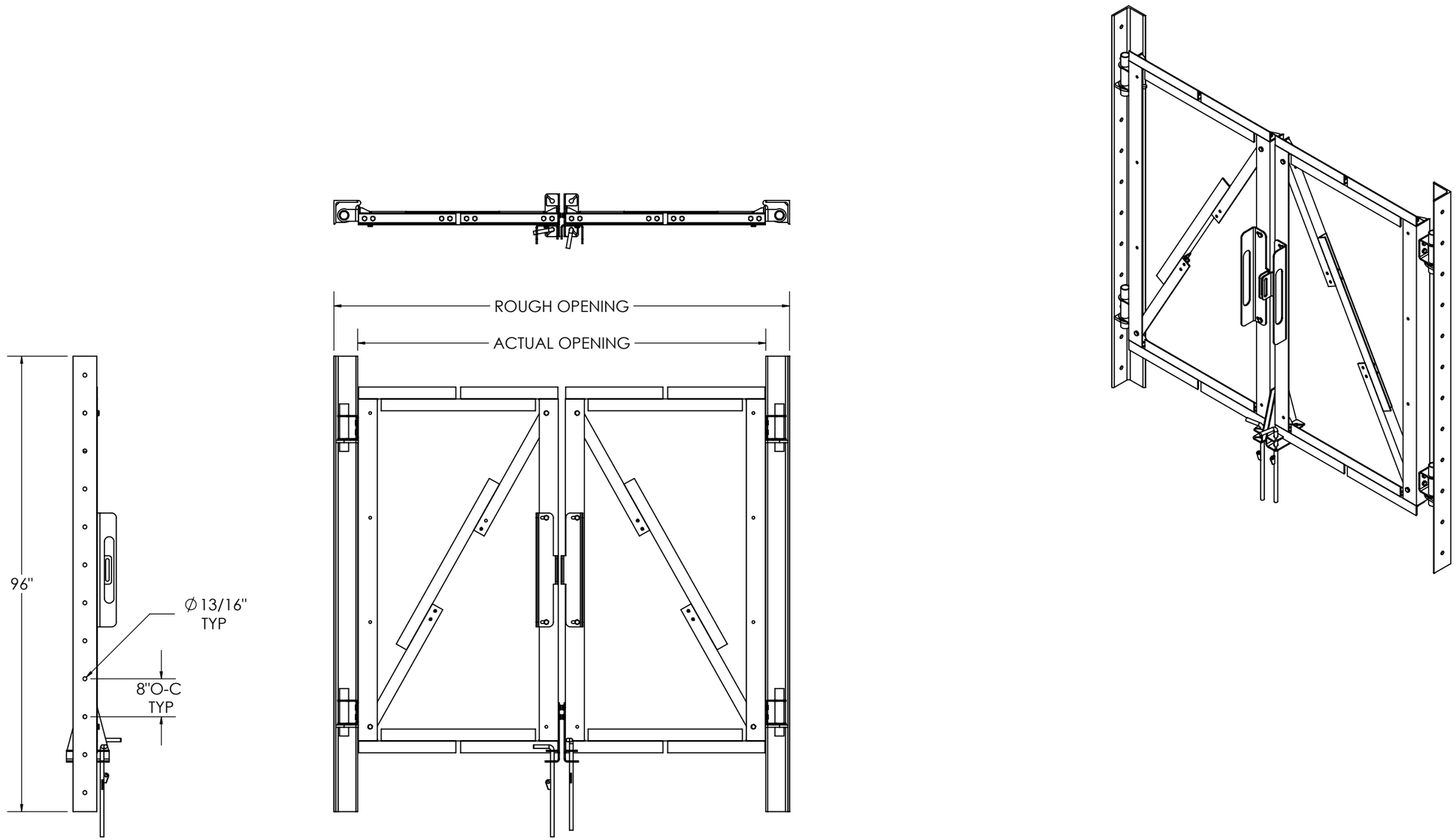

RIVN-G-08-0812-D

DOUBLE OPENING GATE - 8FT TO 12FT; FOR 8FT TALL PANELS

SHEET 2 OF 4	THIRD ANGLE PROJECTION	CATEGORY	4			PERFECTVISION
		SERIES	3			
3/29/2023	SCALE 1:24	TYPE	2			
DIMENSIONS ARE IN INCHES TOLERANCES U.N.O. HOLES: +1/16", -1/32" ANGULAR: PROFILE ±1/4°, BEND ±2° ALL OTHERS: ±1/16"		BY BSB	1	ADDED 80IN WIDE VERSION	3/29/2023	RIVIAN GATE SERIES ENGINEERING DETAIL
		CHECKED SJS	0	INITIAL RELEASE	3/6/2023	DOCUMENT NUMBER RIVN-ENG-01 / REV 1
		STATUS	REV	DESCRIPTION	DATE	

C:\Users\BrentonB\Desktop\ADD TO SERVER WHEN BACK ONLINE\RIV_Gate\

PROPRIETARY AND CONFIDENTIAL THE INFORMATION CONTAINED IN THIS DRAWING IS THE SOLE PROPERTY OF PERFECTVISION. ANY REPRODUCTION IN PART OR AS A WHOLE WITHOUT THE WRITTEN PERMISSION OF PERFECTVISION IS PROHIBITED.

Docusign Envelope ID: 54931469-A40F-46BD-84C4-27E801AD8D1A

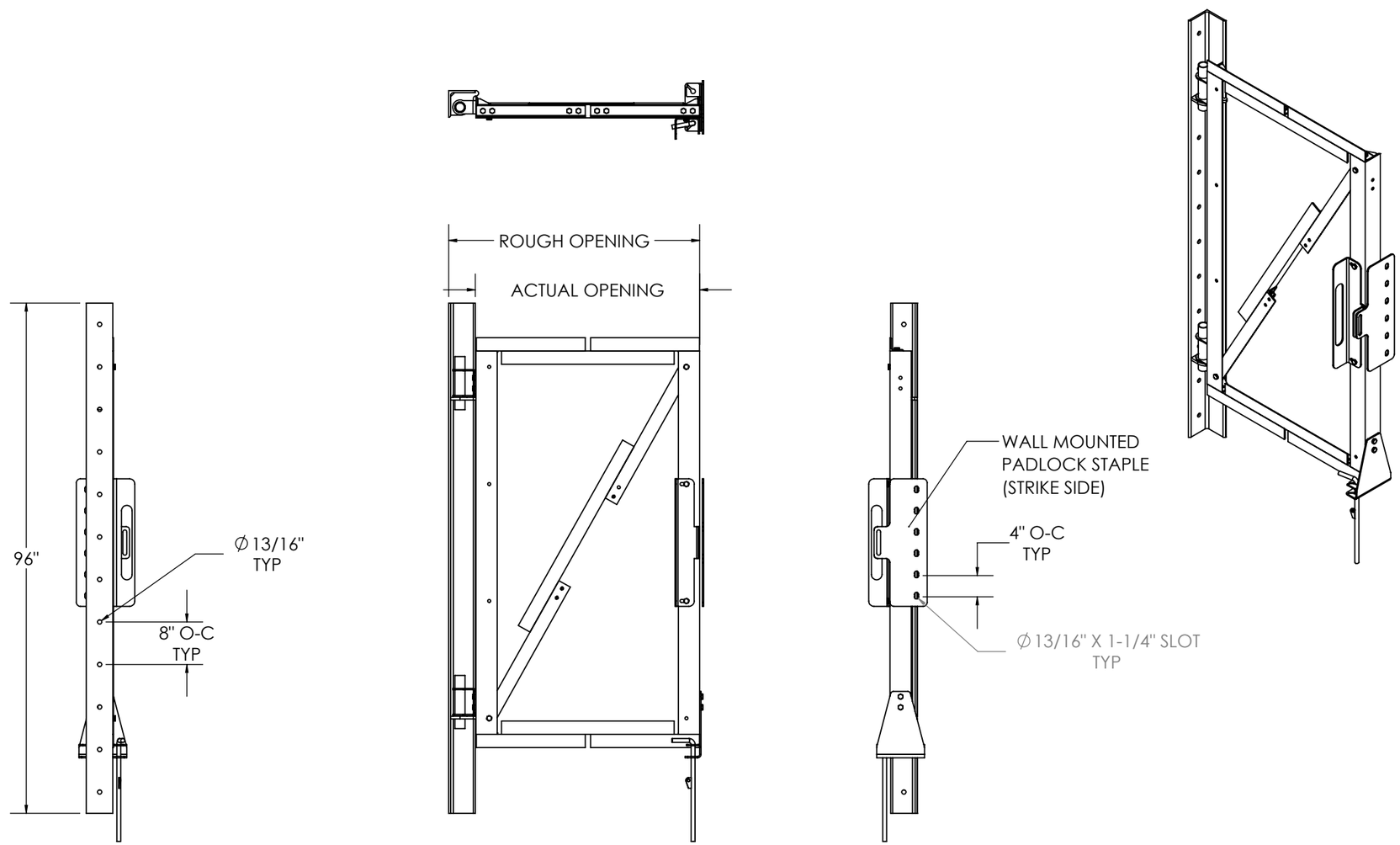

RIVN-G-08-0406-S

SINGLE OPENING GATE - 4FT TO 6FT WIDE; FOR 8FT TALL PANELS

SHEET 3 OF 4	THIRD ANGLE PROJECTION	CATEGORY	4		
		SERIES	3		
3/29/2023	SCALE 1:24	TYPE	2		
DIMENSIONS ARE IN INCHES TOLERANCES U.N.O. HOLES: +1/16", -1/32" ANGULAR: PROFILE ±1/4°, BEND ±2° ALL OTHERS: ±1/16"		BY BSB	1	ADDED 80IN WIDE VERSION	3/29/2023
		CHECKED SJS	0	INITIAL RELEASE	3/6/2023
		STATUS	REV	DESCRIPTION	DATE

PERFECTVISION®

RIVIAN GATE SERIES ENGINEERING DETAIL

DOCUMENT NUMBER RIVN-ENG-01

REV 1

C:\Users\BrentonB\Desktop\ADD TO SERVER WHEN BACK ONLINE\RIV_Gate\

PROPRIETARY AND CONFIDENTIAL THE INFORMATION CONTAINED IN THIS DRAWING IS THE SOLE PROPERTY OF PERFECTVISION. ANY REPRODUCTION IN PART OR AS A WHOLE WITHOUT THE WRITTEN PERMISSION OF PERFECTVISION IS PROHIBITED.

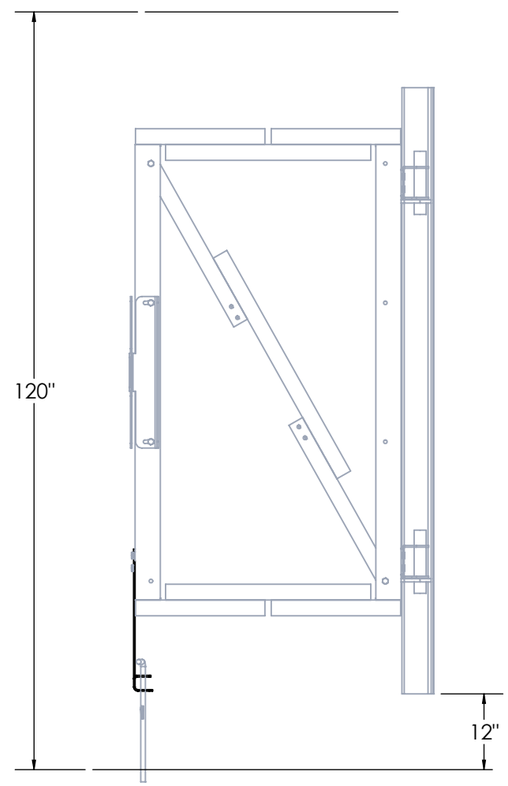

RIVN-G-08-0406-S WITH RIVN-G-10-UP

FOR INSTALLATION WITH 10FT TALL PANELS:
INSTALL WITH GATE SUPPORT ANGLE MOUNTED 12" ABOVE GRADE AND USE RIVN-G-10-UP (EXTENDED CANE BOLT BRACKET). PANELS WILL EXTEND APPROXIMATELY 18" ABOVE GATE FRAME AND 24" BELOW GATE FRAME.

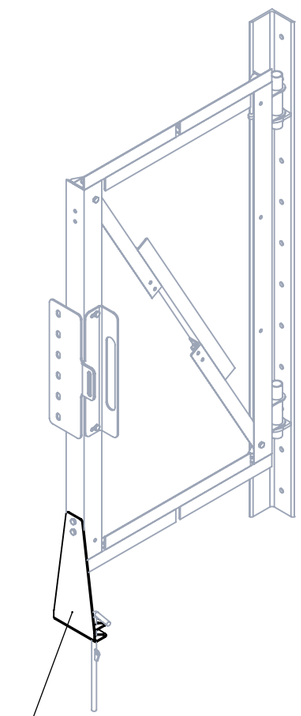

SHEET 4 OF 4	THIRD ANGLE PROJECTION	CATEGORY	4		
		SERIES	3		
3/29/2023	SCALE 1:24	TYPE	2		
DIMENSIONS ARE IN INCHES TOLERANCES U.N.O. HOLES: +1/16", -1/32" ANGULAR: PROFILE ±1/4°, BEND ±2° ALL OTHERS: ±1/16"		BY BSB	1	ADDED 80IN WIDE VERSION	3/29/2023
		CHECKED SJS	0	INITIAL RELEASE	3/6/2023
		STATUS	REV	DESCRIPTION	DATE

PERFECTVISION®

RIVIAN GATE SERIES ENGINEERING DETAIL

DOCUMENT NUMBER RIVN-ENG-01 REV 1

C:\Users\BrentonB\Desktop\ADD TO SERVER WHEN BACK ONLINE\RIV_Gate\

PROPRIETARY AND CONFIDENTIAL THE INFORMATION CONTAINED IN THIS DRAWING IS THE SOLE PROPERTY OF PERFECTVISION. ANY REPRODUCTION IN PART OR AS A WHOLE WITHOUT THE WRITTEN PERMISSION OF PERFECTVISION IS PROHIBITED.

Docusign Envelope ID: 54931469-A40F-46BD-84C4-27E801AD8D1A

PARKING STALL LEGEND

DESCRIPTION	SYMBOL
PROPOSED DCFC DISPENSER	#

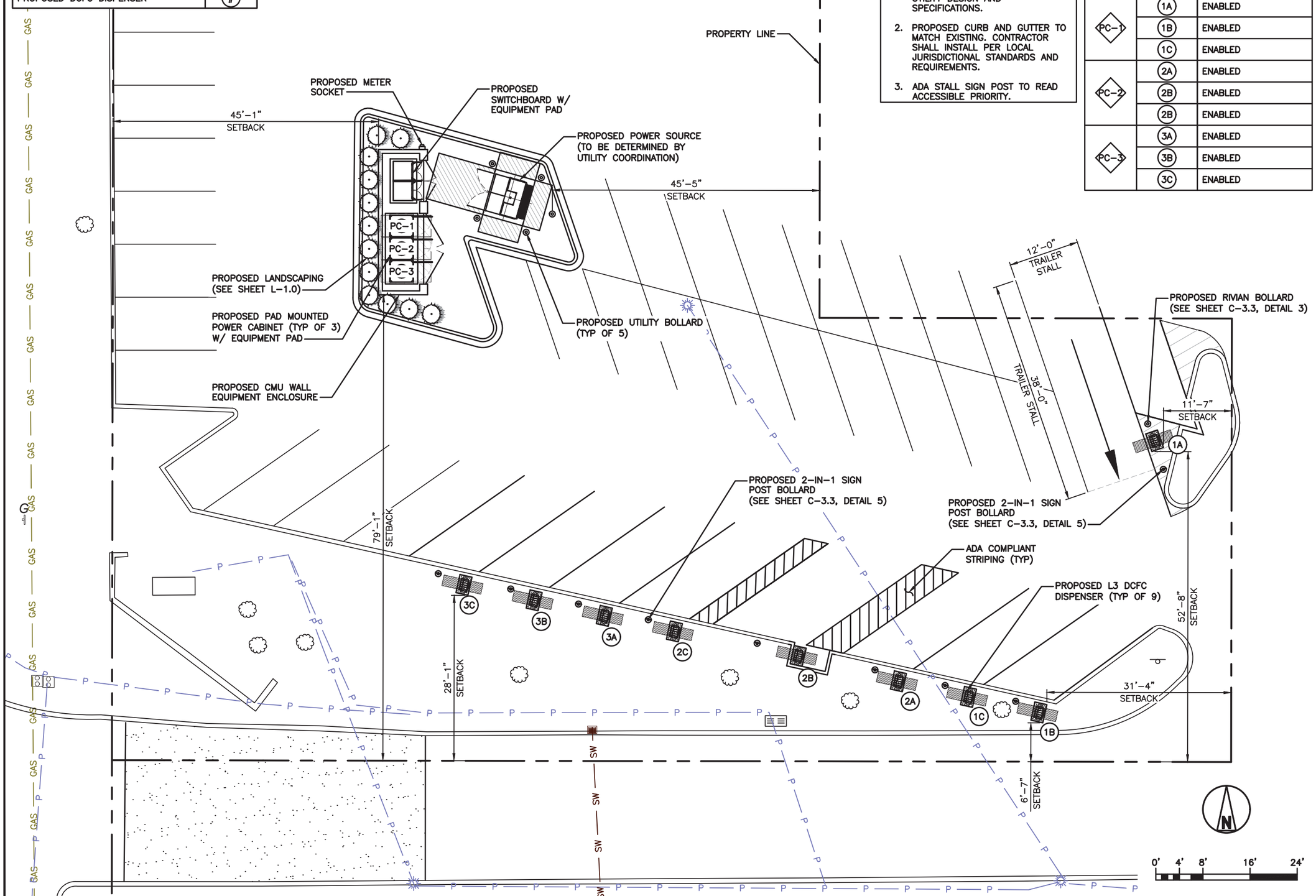

GENERAL NOTES:

1. RIVIAN CONTRACTOR TO REFERENCE DETAILS OF COMED ELECTRIC UTILITY DESIGN AND SPECIFICATIONS.
2. PROPOSED CURB AND GUTTER TO MATCH EXISTING. CONTRACTOR SHALL INSTALL PER LOCAL JURISDICTIONAL STANDARDS AND REQUIREMENTS.
3. ADA STALL SIGN POST TO READ ACCESSIBLE PRIORITY.

SIGNAGE SCHEDULE

POWER CABINET	DISPENSER	ENABLED/DEDICATED:
PC-1	1A	ENABLED
	1B	ENABLED
	1C	ENABLED
PC-2	2A	ENABLED
	2B	ENABLED
	2B	ENABLED
PC-3	3A	ENABLED
	3B	ENABLED
	3C	ENABLED

ENLARGED SITE PLAN

1

STAMP:

8/30/2024

LICENSED PROFESSIONAL ENGINEER
SHELTON D. KEISLING
062.069129

DocuSigned by:
Shelton Keisling
EF94D8A5B80B407...

ENGINEERING LICENSE:
STATE OF ILLINOIS
PE CERTIFICATE OF AUTHORIZATION # 184.003404

ENGINEER:		PE#:	DISCIPLINE:
SDK	SHELTON D. KEISLING	062-069129	ELECTRICAL
TMS	TERRANCE M. SUPER	062-052514	ELECTRICAL

PLANS PREPARED FOR:

RIVIAN

PLANS PREPARED BY:

SSC

DRAWING NOTICE:

THIS DRAWING HAS NOT BEEN PUBLISHED AND IS THE SOLE PROPERTY OF SSC, INC. AND IS LENT TO THE BORROWER FOR THEIR CONFIDENTIAL USE ONLY, AND IN CONSIDERATION OF THE LOAN OF THIS DRAWING, THE BORROWER PROMISES AND AGREES TO RETURN IT UPON REQUEST AND AGREES THAT IT WILL NOT BE REPRODUCED, COPIED, LENT OR OTHERWISE DISPOSED OF DIRECTLY OR INDIRECTLY, NOR USED FOR ANY PURPOSE OTHER THAN FOR WHICH IT IS FURNISHED.

SUBMITTALS:

DESCRIPTION	DATE	BY	REV
ISSUED FOR CONSTRUCTION	03/30/23	DWO	0
TRAILER STALL REVISED	04/11/23	TX	1
REVISED PER CLIENT COMMENTS	12/20/23	IBA	2
REVISED PER CLIENT COMMENTS	04/23/24	IBA	3
REVISED PER AHJ COMMENTS	08/30/24	IBA	4

APPLICANT SITE NAME:

OAK BROOK

SSC SITE NUMBER:

IL-00002

SITE ADDRESS:

100 OAK BROOK CENTER,
STE. EV
OAK BROOK, IL 60523

SHEET DESCRIPTION:

ENLARGED SITE PLAN

SHEET #:

C-1.2

RIVIAN
3A
2B
2A

RIVIAN

RIVIAN
RIVIAN
1A

SSC

RIVIAN

NA-US-IL-Oak Brook
Oak Brook, Illinois
60523

Disclaimer: This photo simulation is a depiction of a future installation. The actual construction may vary slightly in size, layout, color and texture from this simulation.

SSC

RIVIAN

NA-US-IL-Oak Brook
Oak Brook, Illinois
60523

Disclaimer: This photo simulation is a depiction of a future installation. The actual construction may vary slightly in size, layout, color and texture from this simulation.

ITEM 9.A.1.
BOARD OF TRUSTEES MEETING
SAMUEL E. DEAN BOARD ROOM
BUTLER GOVERNMENT CENTER
1200 OAK BROOK ROAD
OAK BROOK, ILLINOIS
630-368-5000

AGENDA ITEM

Board of Trustees Regular Meeting
of
October 22, 2024

SUBJECT: Liquor License Ordinance G-1260 increasing by 1 to 44 the number of class A-1 liquor licenses (Eddie V's) and decreasing by 1 to 6 the number of class D liquor licenses (Michael Jordan's Steakhouse))

FROM: Netasha Scarpiniti, Clerk

BUDGET SOURCE/BUDGET IMPACT: N/A

RECOMMENDED MOTION: I move to approve Ordinance G-1260, increasing by 1 to 44 the number of class A-1 liquor licenses (Eddie V's) and decreasing by 1 to 6 the number of class D liquor licenses (Michael Jordan's Steakhouse)

Background/History:

Village Code requires that any changes in the number of liquor licenses being held in the Village of Oak Brook must be passed by ordinance.

Eddie V's Restaurant is opening a new location at 3001 Butterfield Rd at the Oak Brook Promenade. They have submitted a liquor license application via the Village's online portal requesting approval of a class A-1 license. If approved, this will increase the number of class A-1 licenses to forty-four. Prior to the issuance of their license, staff will ensure that all documentation and payment have been received and that Development Services has approved their location for occupancy and compliance with liquor code requirements.

The Village Board approved Michael Jordan's Restaurant's request for a class D license. However, after careful consideration, they decided not to utilize it before making payment. As a result, it is necessary to adjust the liquor code to reduce the number of class D licenses by one.

Recommendation:

Staff recommends that the Village Board approve Ordinance G-1260, increasing by 1 to 44 the number of class A-1 liquor licenses (Eddie V's) and decreasing by 1 to 6 the number of class D liquor licenses (Michael Jordan's Steakhouse)

Attachments:

1. Ordinance-LC-AL-G-1260 - Increase A-1 for Eddie V's Decrease D for Michael Jordans

THE VILLAGE OF OAK BROOK

COOK AND DUPAGE COUNTIES, ILLINOIS

ORDINANCE

2024-LC-AL-G-1260

AN ORDINANCE AMENDING THE VILLAGE OF OAK BROOK CODE OF ORDINANCES, AS AMENDED, TITLE 4 (BUSINESS AND LICENSE REGULATIONS), CHAPTER 1 (LIQUOR CONTROL), SECTION 8A (FEES AND NUMBER OF LICENSES AUTHORIZED) TO INCREASE THE NUMBER OF AUTHORIZED CLASS A-1 LIQUOR LICENSES BY ONE TO FORTY-FOUR FOR EDDIE V'S AND DECREASE THE NUMBER OF CLASS D LIQUOR LICENSES BY ONE TO SIX FOR MICHAEL JORDAN'S STEAKHOUSE.

EDDIE V'S 3001 BUTTERFIELD RD, OAK BROOK, IL
MICHAEL JORDAN'S 1225 WEST 22ND ST., OAK BROOK, IL

LAURENCE E. HERMAN, Village President
NETASHA SCARPINITI, Village Clerk

NAVEEN JAIN
MICHAEL MANZO
MELISSA MARTIN
JAMES NAGLE
SURESH REDDY
EDWARD TIESENGA

Village Board

Published in pamphlet form by authority of the
President and the Board of Trustees of the
Village of Oak Brook
On this the 22th day of October 2024

ORDINANCE 2024-LC-AL-G-1260

AN ORDINANCE AMENDING THE VILLAGE OF OAK BROOK CODE OF ORDINANCES, AS AMENDED, TITLE 4 (BUSINESS AND LICENSE REGULATIONS), CHAPTER 1 (LIQUOR CONTROL), SECTION 8A (FEES AND NUMBER OF LICENSES AUTHORIZED) TO INCREASE THE NUMBER OF AUTHORIZED CLASS A-1 LIQUOR LICENSES BY ONE TO FORTY-FOUR FOR EDDIE V'S AND DECREASE THE NUMBER OF CLASS D LIQUOR LICENSES BY ONE TO SIX FOR MICHAEL JORDAN'S STEAKHOUSE.

EDDIE V'S 3001 BUTTERFIELD RD, OAK BROOK, IL
MICHAEL JORDAN'S 1225 WEST 22ND ST., OAK BROOK, IL

WHEREAS, the Village of Oak Brook (hereinafter referred to as the "Village") is an Illinois Municipal Corporation organized pursuant to the laws of the State of Illinois;

WHEREAS, the Village has in full force and effect a codified set of ordinances which are of a general and permanent nature, which said codified set is known and designated as the Village Code of the Village of Oak Brook, as amended;

WHEREAS, Title 4 (Business And License Regulations), Chapter 1 (Liquor Control), Section 8a (Fees And Number Of Licenses Authorized) of the Village Code of the Village of Oak Brook authorizes certain numbers of liquor licenses and the number of such licenses issued for each class of license may be increased or decreased from time to time by ordinance approved by the Village President and Village Board of Trustees (collectively the "Corporate Authorities") due to changes in ownership of licensed premises, the creation of a new and deserving business enterprise, or the abandonment, revocation, surrender or other termination of an existing license; and

WHEREAS, the Corporate Authorities deem it advisable and in the best interest and in furtherance of the general welfare of the citizens of the Village that the Village Code of the Village of Oak Brook be amended to increase the number of authorized Class A-1 Liquor Licenses by One to Forty-Four and Decrease the number of Class D Liquor Licenses by one to Six.

Eddie V's 3001 Butterfield Rd, Oak Brook, IL 60523
Michael Jordan's Steak House 1225 West 22nd St., Oak Brook, IL 60523

NOW, THEREFORE, BE IT ORDAINED BY THE PRESIDENT AND BOARD OF TRUSTEES OF THE VILLAGE OF OAK BROOK, DU PAGE AND COOK COUNTIES, ILLINOIS as follows:

Section 1: The Corporate Authorities hereby find that all the recitals hereinbefore stated as contained in the preamble to this ordinance are full, true, and correct and do hereby, by reference, incorporate and make them part of this ordinance as legislative findings.

Section 2: That Section 8A of Chapter 1 (Liquor Control) of Title 4 (Business and License Regulations) (4-1-8A) of the Village Code of the Village of Oak Brook, Illinois be amended pursuant to the following table:

Class Of License	Application Fee	Annual License Fee	Number Issued
A-1	$2,000.00	$2,750.00	~~43~~**44**
A-2	2,000.00	2,750.00	0
A-3	2,000.00	2,750.00	1
A-4	2,000.00	2,750.00	1
A-5	2,000.00	2,750.00	1

A-6	2,000.00	2,750.00	1
B	2,000.00	2,750.00	20
C	2,000.00	2,200.00	1
D	2,000.00	2,200.00	~~7~~**6**
E	2,000.00	4,950.00	7
F	No Fee	$50 per event	Not Applicable
G	No Fee	No Fee	1
H	No Fee	No Fee	1
I	2,000.00	2,750.00	2
J	2,000.00	500.00	0
K	2,000.00	2,750.00	0
L	2,000.00	2,750.00	1
M	----	500.00	3
N	2,000.00	2,750.00	1
O	2,000.00	2,750.00	1
P	2,000.00	2,750.00	1

Additions are bold and double-underlined: ~~**deletions are struck through**~~.

Section 3: The title, chapter(s), and section(s) adopted by this Ordinance shall be numbered and placed in an appropriate title, chapter(s), and section(s) when and during the codification of the Oak Brook Municipal Code.

Section 4: This Ordinance shall be in full force and effect from and after its passage, approval, and publication as provided by law.

Section 5: This Ordinance shall be published in book or pamphlet form as provided by the Illinois Municipal Code.

Section 6: That all ordinances or parts of ordinances in conflict with the terms of this Ordinance shall be repealed to the extent of said conflict.

Section 7: If any section, paragraph, clause, or provision of this Ordinance is declared by a court of law to be invalid or unconstitutional, the invalidity or unconstitutionality thereof shall not affect the validity of the remaining provisions of the Village's Municipal Code, which are hereby declared to be separable.

Section 8: This Ordinance shall be entered into the minutes and upon the journals of the Board of Trustees of the Village of Oak Brook.

[Remainder of Page Intentionally left blank; Roll Call to follow]

APPROVED THIS 22nd day of October 2024.

_____
Laurence E. Herman
Village President

PASSED THIS 22nd day of October 2024.

Ayes: _____

Nays: _____

Absent: _____

ATTEST:

_____
Netasha Scarpiniti
Village Clerk

ITEM 9.A.2.
BOARD OF TRUSTEES MEETING
SAMUEL E. DEAN BOARD ROOM
BUTLER GOVERNMENT CENTER
1200 OAK BROOK ROAD
OAK BROOK, ILLINOIS
630-368-5000

AGENDA ITEM

Board of Trustees Regular Meeting
of
October 22, 2024

SUBJECT: Zoll Cardiac Monitor/Defibrillator Purchase Authorization

FROM: Kevin Fleege, Fire Chief
Barbara Redderoth, Administrative Coordinator

BUDGET SOURCE/BUDGET IMPACT: Emergency Medical Services, Equipment Replacement 731-90200, $45,000.

RECOMMENDED MOTION: I move to approve Resolution R-2241, a resolution approving the waiver of competitive bidding and authorizing the purchase of a cardiac monitor/defibrillator, directing staff to issue a purchase order to Zoll Medical Corporation, Chelmsford, MA, for the purchase of one (1) Zoll X Series Advanced Cardiac Monitor/Defibrillator and accessories for net amount after trade-in of $45,000.

Background/History:

Cardiac monitoring, electrocardiogram (ECG) interpretation and the ability to quickly deliver a therapeutic dose of electrical current (defibrillation) to a life-threatening cardiac dysrhythmia is a fundamental Advanced Life Support (ALS) skill that is frequently used in the pre-hospital setting by paramedics. Effective cardiac monitoring of a potential cardiac patient's heart rhythm, the ability to detect changes that could be life-threatening, and the capability of providing early defibrillation are of the utmost importance toward a favorable outcome of a sudden cardiac related illness, heart attack or cardiac arrest.

Our paramedics are taught how to interpret and properly treat a wide variety of cardiac rhythms in an attempt to stabilize the patient prior to being transported to the hospital. Providing that level of care requires the use of very specialized equipment, such as our technically advanced monitor/defibrillators.

Zoll cardiac monitors/defibrillators are currently owned and operated by the department. They have been previously evaluated and compared against other manufactured models and brands, and are continuously determined to be a favored device providing extremely reliable, dependable and effective service with state-of-the-art functionality for not only Oak Brook, but also

surrounding fire departments and hospitals. In our ability to provide the highest level of care, it is critical that we maintain similarity and functionality of our specialized equipment, thereby guaranteeing our personnel will be knowledgeable and comfortable when operating on the scene of an emergency.

In addition to monitoring and defibrillation, the devices are also capable of transcutaneous pacing, measuring oxygen saturation (SpO2), carbon monoxide saturation (SpCO), end-tidal carbon monoxide (ETCO2), 12-Lead ECG, real BVM, temperature, and automatic blood pressure monitoring.

In 2022, the fire department did an extensive study into our cardiac monitor replacement plan and recommended, in the December 13, 2022 meeting, changing from a five-year replacement cycle to a seven-year replacement cycle. This new cycle demonstrates the best practices within the industry and maximizes the life span of the unit while it is still supported by the manufacturer for parts and repair. Based on the seven-year replacement cycle implemented in 2022, our cardiac monitor purchased in 2017 has reached its useful life span. As part of our ongoing commitment to the capital equipment improvement program, in conjunction with the recommendation of the product's manufacturer, advancements in the level of prescribed treatment and improvements in today's software and hardware components, it has become necessary for the replacement of the existing unit.

Staff is seeking to waive the formal bidding process as the Village of Oak Brook is a member of NPPGov (Member ID: M-5701111) cooperative. NPPGov has already conducted the bid process with Zoll Medical Corporation, Contract #PS20200.

Recommendation:

Staff recommends the approval of Resolution R-2241 authorizing the purchase of one (1) Zoll X Series Advanced Cardiac Monitor/Defibrillator with delivery expected prior to December 31, 2024.

Attachments:

1. R-2024-FD-PG-EQ-R-2241
2. Oak Brook Fire Department - Q-83349 - Version 3

THE VILLAGE OF OAK BROOK

COOK AND DUPAGE COUNTIES, ILLINOIS

RESOLUTION

NUMBER R-2024-FD-PG-EQ-R-2241

A RESOLUTION
APPROVING THE WAIVER OF COMPETITIVE BIDDING AND AUTHORIZING THE PURCHASE OF A MONITOR/DEFIBRILLATOR

LAURENCE E. HERMAN, Village President
NETASHA SCARPINITI, Village Clerk

NAVEEN JAIN
MICHAEL MANZO
MELISSA MARTIN
JAMES NAGLE
A. SURESH REDDY
EDWARD TIESENGA

Village Board

Published in pamphlet form by authority of the
President and the Board of Trustees of the Village of Oak Brook
on this the 22nd day of October 2024

RESOLUTION NO. R-2024-FD-PG-EQ-R-2241

A RESOLUTION
APPROVING THE WAIVER OF COMPETITIVE BIDDING AND AUTHORIZING THE PURCHASE OF A MONITOR/DEFIBRILLATOR

WHEREAS, the Village of Oak Brook is a municipal corporation with authority provided for and granted pursuant to the Illinois Municipal Code to exercise certain powers and perform certain functions pertaining to its local government and affairs;

WHEREAS, the Village of Oak Brook (hereinafter referred to as "Village") upon approval of the Village President and Board of Trustees (collectively, the "Corporate Authorities") may enter into an Agreement with another party pursuant to Illinois Statute;

WHEREAS, Zoll Medical Corporation (hereinafter referred to as "Company") offers purchase, lease, and exchange options for medical devices and supporting software for said devices;

WHEREAS, the Village Fire Department currently owns and operates cardiac monitors/defibrillators and AutoPulse units manufactured by the Company, some of which are nearing the end of their useful life cycle;

WHEREAS, after review of the current cardiac monitor replacement plan, Staff is recommending a shift from a five-year replacement cycle to a seven-year replacement cycle to reflect common practices within the fire emergency service industry;

WHEREAS, adopting the updated replacement cycle necessitates the replacement of the Fire Department's cardiac monitor purchased in 2017;

WHEREAS, Company has prepared and submitted a proposal (Quote No: Q-83349) covering the purchase of one (1) Zoll X Series Advanced Cardiac Monitors/Defibrillator for a net cost of $45,000.00 after credit for the trade-in of the 2017 monitor;

WHEREAS, staff recommends approval from the Corporate Authorities to purchase the medical equipment from Company for the reasons provided herein;

WHEREAS, the Village is interested in contracting with Company for the aforementioned purposes and as set forth in the Purchase Order, attached hereto and incorporated herein as Exhibit A; and

WHEREAS, the Village of Oak Brook Corporate Authorities are of the opinion that it is in the best interests of the Village of Oak Brook to issue the Purchase Order to the Company for the purposes referenced herein.

NOW, THEREFORE, BE IT RESOLVED, in open meeting assembled, by the Village President and Board of Trustees of the Village of Oak Brook, DuPage and Cook Counties, Illinois as follows:

Section One – Recitals

The Corporate Authorities hereby find that all of the recitals hereinbefore stated as contained in the preamble to this Resolution are full, true, and correct and do hereby, by reference, incorporate and make them part of this Resolution as legislative findings.

Section Two – Approval of Purchase

The Village hereby approves the issuance of the Purchase Order substantially in the form attached hereto and made a part hereof collectively as Exhibit A.

Section Three – Authorization and Direction

The Village Manager is hereby authorized to execute the Purchase Order, substantially in the form attached hereto as Exhibit A.

Section Four - Other Actions Authorized

The officers, employees and/or agents of the Village shall take all actions necessary or reasonably required to carry out and give effect to the intent of this resolution and otherwise to consummate the transactions contemplated herein, and shall take all actions necessary in conformity therewith including, without limitation, the execution and delivery of all documents required to be delivered in connection with the transaction contemplated herein.

Section Five - Authorization of Expenditures

The Corporate Authorities hereby authorize and direct the expenditure of all costs related to the execution of the Purchase Order, additionally, the Village is authorized and directed to allocate and spend all necessary funds to fulfill the requirements of the Purchase Order and of this Resolution.

Section Six – Waiver of Bidding Process

To the extent that any requirement of bidding would be applicable to the transactions contemplated hereunder, the same is hereby waived.

Section Seven - Acts of Village Officials

That all past, present and future acts and doings of the officials of the Village that are in conformity with the purpose and intent of this resolution are hereby, in all respects, ratified, approved, authorized and confirmed.

Section Eight – Effective Date

This resolution shall be in full force and effect from and after its passage, approval and publication as provided by law.

Section Nine - Publication

This resolution shall be published in book or pamphlet form as provided by the Illinois Municipal Code.

Section Ten – Conflict Clause

All resolutions, parts of resolutions or board actions in conflict herewith are hereby repealed to the extent of such conflict.

Section Eleven – Saving Clause

If any section, paragraph, clause or provision of this resolution is declared by a court of law to be invalid or unconstitutional, the invalidity or unconstitutionality thereof shall not affect the validity of any other provisions of this resolution, which are hereby declared to be separable.

Section Twelve – Recording

This resolution shall be entered into the minutes and upon the journals of the Board of Trustees of the Village of Oak Brook.

PASSED THIS 22nd day of October 2024.

Ayes: _____

Nays: _____

Absent: _____

APPROVED THIS 22nd day of October 2024.

_____
LAURENCE E. HERMAN,
Village President

ATTEST:

_____
NETASHA SCARPINITI,
Village Clerk

EXHIBIT A

[Purchase Order]

ZOLL Medical Corporation
269 Mill Road
Chelmsford, MA 01824-4105
Federal ID# 04-2711626

Phone: (800) 348-9011
Fax: (978) 421-0015
Email: esales@zoll.com

Quote No: Q-83349 Version: 3

Oak Brook Fire Department
1200 Oak Brook Road
Oak Brook, IL 60523

ZOLL Customer No: 105223

Jeff Marciniak
(630) 706-4024
jmarciniak@oak-brook.org

Quote No: Q-83349
Version: 3

Issued Date: October 16, 2024
Expiration Date: December 31, 2024

Terms: NET 30 DAYS

FOB: Destination

Freight: Free Freight

Prepared by: Kyle Sears
EMS Territory Manager
ksears@zoll.com
708-466-8172

Item	Contract Reference	Part Number	Description	Qty	List Price	Adj. Price	Total Price
1	1501418	601-2231212-01	**X Series Advanced Monitor/Defibrillator - 12-Lead ECG, Pacing, SpO2, SpCO, EtCO2, BVM, Temp, NIBP, CPR Expansion Pack, Remote View** Includes: TBI Dashboard, 4 trace tri-mode display monitor/ defibrillator/ printer, advisory algorithm, advanced communications package (Wi-Fi, Bluetooth, USB cellular modem capable) USB data transfer capable and large 6.5in (16.5cm) diagonal screen. Accessories Included: MFC cable and CPR connector, A/C power cord, One (1) roll printer paper, 6.6 Ah Li-ion battery, Operators Manual, Quick Reference Guide, and One (1)-year EMS warranty. Parameter Details: Real CPR Help - Dashboard display of CPR Depth and Rate for Adult and Pediatric patients, Visual and audio prompts to coach CPR depth (Adult patient only), Release bar to ensure adequate release off the chest, Metronome to coach rate for Adult and Pediatric patients. See-Thru ® CPR artifact filtering • Interpretative 12-Lead ECG (Full 12 ECG lead view with both dynamic and static 12-lead mode display. 12-Lead OneStep ECG cable - includes 4-Lead limb lead cable and removable precordial 6-Lead set) • ZOLL Noninvasive Pacing Technology • Real BVM Help: Dashboard provides real-time ventilation feedback on both volume and rate for intubated and non-intubated patients. AccuVent Cable included. (Accuvent disposable sensors sold separately) • Welch Allyn NIBP with Smartcuff. 10 foot Dual Lumen hose and SureBP Reusable Adult Medium Cuff • Masimo SpO2 & SpCO with Signal Extraction Technology (SET), Rainbow SET® • EtCO2 Oridion Microstream Technology. Microstream tubing set sold separately • Two Temperature monitoring channels with digital displays. Temperature probes sold separately •	1	$56,243.00	$46,119.26	$46,119.26

ZOLL Medical Corporation
269 Mill Road
Chelmsford, MA 01824-4105
Federal ID# 04-2711626

Phone: (800) 348-9011
Fax: (978) 421-0015
Email: esales@zoll.com

Oak Brook Fire Department
Quote No: Q-83349 Version: 3

Item	Contract Reference	Part Number	Description	Qty	List Price	Adj. Price	Total Price
2	1501418	8900-0402	**CPR Stat-padz HVP Multi-Function CPR Electrodes - 1 pair**	2	$113.00	$84.75	$169.50
3	1501418	8300-000676	**OneStep Cable, X Series**	1	$569.00	$466.58	$466.58
4	1501418	8900-000219-01	**OneStep Pediatric CPR Electrode (1 pair)**	2	$118.00	$96.76	$193.52
5	1501418	8000-001128	**Accuvent Flow Tube (Box of 10)**	1	$797.00	$653.54	$653.54
6	1501418	8000-0895	**Cuff Kit with Welch Allyn Small Adult, Large Adult and Thigh Cuffs**	1	$195.00	$159.90	$159.90
7	1501418	REUSE-09-2MQ	**Welch Allyn REUSE-09-2MQ Cuff, Child, 2-Tube, Twist Lock connector**	1	$66.00	$54.12	$54.12
8	1501418	8000-000875-01	**Paper, Thermal, BPA Free (Box of 6)**	1	$32.00	$26.24	$26.24
9	1501418	8707-000502-01	**X Series Accessory Carry Case - Printer Chute with Single Zipper**	1	$663.00	$0.00	$0.00
10	1501418	8707-000503-01	**X Series Clear Plastic Display Protector**	1	$49.00	$40.18	$40.18
11	1501418	8000-002005-01	**Cable Sleeve, Propaq / X Series, ZOLL Blue**	1	$63.00	$51.66	$51.66
12	1501418	8009-0020	**CPR-D-padz and CPR Stat Padz Connector**	1	$493.00	$404.26	$404.26
13		8000-000315	**Reusable Adult Skin Temperature Probe**	1	$156.00	$156.00	$156.00
14	1501418	8000-000371	**rainbow® DCI® SpO2/SpCO/SpMet Adult Reusable Sensor with connector (3 ft)**	1	$1,076.00	$882.32	$882.32
15	1501418	8000-001392	**Masimo rainbow® RC-4 - 4FT, Reusable EMS Patient Cable**	1	$313.00	$256.66	$256.66
16		6008-9901-61	**ZOLL X Series Trade In Allowance (EMS Group)** See Trade Unit Considerations.	1		($4,633.74)	($4,633.74)

Subtotal: $45,000.00

Total: $45,000.00

ZOLL Medical Corporation
269 Mill Road
Chelmsford, MA 01824-4105
Federal ID# 04-2711626

Phone: (800) 348-9011
Fax: (978) 421-0015
Email: esales@zoll.com

Oak Brook Fire Department
Quote No: Q-83349 Version: 3

Contract Reference	Description
1501418	Reflects CHM GPO NPP 2020 - Contract No. PS20200 (EXT2) contract Pricing. Notwithstanding anything to the contrary herein, the terms and conditions set forth in NPP Contract No. PS20200 shall apply to the customer's purchase of the products set forth on this quote.

Trade Unit Considerations
Trade-In values valid through December 31, 2024 if all equipment purchased is in good operational and cosmetic condition and includes all standard accessories. Trade-In values are dependent on the quantity and configuration of the ZOLL devices listed on this quotation. Customer assumes responsibility for shipping trade-in equipment at the quantities listed on the trade line items in this quotation to ZOLL's Chelmsford Headquarters within 60 days of receipt of new equipment. Customer agrees to pay cash value for trade-in equipment not shipped to ZOLL on a timely basis.

To the extent that ZOLL and Customer, or Customer's Representative have negotiated and executed overriding terms and conditions ("Overriding T's & C's"), those terms and conditions would apply to this quotation. In all other cases, this quote is made subject to ZOLL's Standard Commercial Terms and Conditions ("ZOLL T's & C's") which for capital equipment, accessories and consumables can be found at https://www.zoll.com/about-zoll/invoice-terms-and-conditions, for software products can be found at https://www.zoll.com/en/about-zoll/legal, and for ExpertCare Service Plans can be found at https://www.zoll.com/en/about-zoll/compliance. Except in the case of overriding T's and C's, any Purchase Order ("PO") issued in response to this quotation will be deemed to incorporate ZOLL T's & C's, and any other terms and conditions presented shall have no force or effect except to the extent agreed in writing by ZOLL.

1. Delivery will be made upon availability.
2. This Quote expires on December 31, 2024. Pricing is subject to change after this date.
3. Applicable tax, shipping & handling will be added at the time of invoicing.
4. All purchase orders are subject to credit approval before being accepted by ZOLL.
5. To place an order, please forward the purchase order with a copy of this quotation to esales@zoll.com or via fax to 978-421-0015.
6. All discounts from list price are contingent upon payment within the agreed upon terms.
7. Place your future accessory orders online by visiting the ZOLL web store.

ZOLL Medical Corporation
269 Mill Road
Chelmsford, MA 01824-4105
Federal ID# 04-2711626

Phone: (800) 348-9011
Fax: (978) 421-0015
Email: esales@zoll.com

Oak Brook Fire Department
Quote No: Q-83349 Version: 3

Order Information (to be completed by the customer)

[ ] Tax Exempt Entity (Tax Exempt Certificate must be provided to ZOLL)

[ ] Taxable Entity (Applicable tax will be applied at time of invoice)

BILL TO ADDRESS	SHIP TO ADDRESS
Name/Department:	Name/Department:
Address:	Address:
City / State / Zip Code:	City / State / Zip Code:

Is a Purchase Order (PO) required for the purchase and/or payment of the products listed on this quotation?

[ ] Yes PO Number: _____ PO Amount: _____
(A copy of the Purchase Order must be included with this Quote when returned to ZOLL)

[ ] No (Please complete the below section when submitting this order)

For organizations that do not require a PO, ZOLL requires written execution of this order. The person signing below represents and warrants that she or he has the authority to bind the party for which he or she is signing to the terms and prices in this quotation.

Oak Brook Fire Department
Authorized Signature:

_____

Name: _____

Title: _____

Date: _____

ITEM 9.A.3.
BOARD OF TRUSTEES MEETING
SAMUEL E. DEAN BOARD ROOM
BUTLER GOVERNMENT CENTER
1200 OAK BROOK ROAD
OAK BROOK, ILLINOIS
630-368-5000

AGENDA ITEM

Board of Trustees Regular Meeting
of
October 22, 2024

SUBJECT: ORDINANCE G-1261, Universal Zoning Code Amendments

FROM: Rebecca Von Drasek, Development Services Director

BUDGET SOURCE/BUDGET IMPACT: N/A

RECOMMENDED MOTION: I move that the Village Board concur with the Planning & Zoning Commission recommendation, with one change to move Hotel Condominiums to the Permitted Use category based upon legal review, thereby approving the text amendments to the Zoning Regulations in accordance with the accompanying Draft, dated October 15, 2024. This recommendation is subject to the following:

1. Zoning amendment factors provided in the petitioner's application material (case file pages B-B.1).
2. Approval of Ordinance G-1261 detailing the requested text amendments.

Background/History:

The Village of Oak Brook has submitted a petition seeking approval of text amendments to the Title 13 Zoning Regulations of the Village Code. This text amendment originated from Board of Trustees desire to update a variety of items within the Village Code.

The Planning & Zoning Commission (P&Z) discussed the proposed revisions at their March, May, June, July, August, and September meetings. The Planning & Zoning Commission's recommendation included revisions to Chapters 2, 3,6,7,10,12,14,15 and the addition of Chapter 18. Following is a chart summarizing the items discussed by the Commission:

Zoning Ordinance Updates

Updated Chapters	Revisions
All Chapters	Title Director of Development Services throughout.
Chapter 2 - Definitions	Multiple Additions and Deletions
Chapter 3 - General Zoning	6 - Solar Panels, 9 - Remove Microcells,
Chapter 6 - Residential Districts	Lot AreaCoverage Images inserted, 7- Area, Bulk, Density, façade materials, 8- Short-Term Rental Prohibiti
Chapter 7 - Business Districts	2 - Establishment of Commercial Districts, ATM, 4 - Location or Retail Sales on Premises, 5 - Outdoor Sales Uses, Outdoor Storage, Mobile Food Vendors, 7A,7B, 7C- Reatil Establishment, Retail;Display Showroom, Outdoor ATM 7D- Hotel Apartment, Hotel, Condominium, Outdoor ATM
Chapter 10 - ORA and Office Districts	ORA Districts -Data Center, Special Uses - Outdoor ATM , ORA-3 - Deleted Development Plan replaced with Planned Development, O-3- Retail sales and signage, Outdoor ATM, O-4- Planned Development for mixed above 10 acres, Outdoor ATM
Chapter 12 - Offstreet Parking and Loading	4.H.3- Parking Structures-Setbacks, 5 - Accessible Parking
Chapter 14 - Administrative and Enforcement	Commissions Combined, 7 - Amendments Updated
Chapter 15 - Planned Developments	Commissions Combined, 8 - Amendments Updated, addition of minor change for PD text.
Chapter 18 - Landscaping	Entire New Chapter

The Planning & Zoning Commission's draft of the code was reviewed at their meetings of March 6th, May 22nd, June 5th and 26th, July 17th, August 7th and 21st, and September 4, 2024. At the hearings, public comments were provided and Q&A occurred regarding the proposed text amendment changes. The P&Z Commission made a recommendation separate of the Board draft (dated May, 2024), The final recommendations of the Planning & Zoning Commission are included within the Case file, dated October 15, 2024.

The Village Attorney has conferred with staff and removed the prohibited uses from the Zoning Ordinance draft text. In addition, the classification of condominiums versus apartments was discussed by the Commission related to Hotel Apartments versus Hotel Condominiums. Following a discussion with the Village Attorney, staff revised the P&Z Commission's final recommendation and placed Hotel Condominiums within the permitted uses within the B-4 District, consistent with Hotel Apartments which are already listed as a permitted use, as the two uses should be under the same use status for compliance with Federal Fair Housing Act standards.

The proposed language that has been added to the text is redlined and underlined and text that is being deleted has been ~~stricken out~~.

Following discussions with Board members prior to the October 22, 2024 meeting, staff prepared three additional memorandums providing potential amendments to the recommended motion. The Village Attorney has advised that these items be considered prior to Ordinance G-1261.

Recommendation:

Staff recommends that the Village Board approve Ordinance G-1261, An Ordinance Amending Title 13 (Zoning Regulations) of the Village of Oak Brook Code of Ordinances.

Attachments:

1. Ordinance 2024-ZO-TA-G-1261
2. Exhibits for BOT 10-22-24.final
3. REG BOT 102224 Agenda Item-AddMemo-Planned Development Standards
4. REG BOT 102224 Agenda Item-AddMemo-SFD Material Standards
5. REG BOT 102224 Agenda Item-AddMemo-Showroom Def

THE VILLAGE OF OAK BROOK
COOK AND DUPAGE COUNTIES, ILLINOIS

ORDINANCE
NUMBER 2024-ZO-TA-G-1261

AN ORDINANCE
AMENDING TITLE 13 (ZONING REGULATIONS) OF THE VILLAGE OF OAK BROOK CODE OF ORDINANCES

LAURENCE E. HERMAN, Village President
NETASHA SCARPINITI, Village Clerk

NAVEEN JAIN
MICHAEL MANZO
MELISSA MARTIN
JAMES NAGLE
A. SURESH REDDY
EDWARD TIESENGA

Village Board

Published in pamphlet form by authority of the
President and the Board of Trustees of the Village of Oak Brook
on this the 22nd day of October 2024

ORDINANCE NO. 2024-ZO-TA-G-1261

AN ORDINANCE
AMENDING TITLE 13 (ZONING REGULATIONS) OF THE VILLAGE OF OAK BROOK CODE OF ORDINANCES

WHEREAS, the Village of Oak Brook is a municipal corporation with authority provided for and granted pursuant to the Illinois Municipal Code to exercise certain powers and perform certain functions pertaining to its local government and affairs;

WHEREAS, the Village has in full force and effect a codified set of ordinances which are of a general and permanent nature, which said codified set is known and designated as the Village Code of Ordinances of the Village of Oak Brook, as amended;

WHEREAS, the Village has the authority to adopt ordinances and to promulgate rules and regulations that pertain to its government and affairs that protect the health, safety, and welfare of its residents including the adoption and imposition of certain taxes;

WHEREAS, Title 13 (Zoning Regulations) of the Village Code is the Village's Zoning Ordinance;

WHEREAS, the Village of Oak Brook Planning & Zoning Commission (the "Commission") held a public hearing after proper notice was published pursuant to State law beginning on May 22, 2024 to discuss an comprehensive amendment to the Zoning Ordinance to clarify and correct certain sections and otherwise recommend modifications to the existing Code; which, after a series of continuances, the Commission reached a consensus and issued a positive recommendation for the Village Board to consider;

WHEREAS, the Village President and Board of Trustees (collectively the "corporate Authorities") finds it necessary and proper pursuant to its authority provided by the Illinois Municipal Code to amend said the Village Code as set forth herein; and

WHEREAS, the Corporate Authorities of the Village of Oak Brook are of the opinion that that it is in the best interests of the safety, health, and welfare of residents to amend Title 13 (Zoning Regulations) of the Village Code, as set forth herein.

NOW, THEREFORE, BE IT ORDAINED, in open meeting assembled, by the Village President and Board of Trustees of the Village of Oak Brook, DuPage and Cook Counties, Illinois as follows:

Section One – Recitals

The Corporate Authorities hereby find that all of the recitals hereinbefore stated as contained in the preamble to this Ordinance are full, true, and correct and do hereby, by reference, incorporate and make them part of this Ordinance as legislative findings.

Section Two – Amendment to Title 13

Title 13 (Zoning Regulations) of the Village Code shall be amended in accordance with Commission's recommendations, a copy of said recommended amendments is attached hereto and incorporated herein as Exhibit A.

Section Three – Codification

The title, chapter(s) and section(s) adopted by this Ordinance shall be numbered and placed in an appropriate title, chapter(s), and sections(s) sections when and during the codification of the Oak Brook Municipal Code.

Section Four -- Effective Date

This Ordinance shall be in full force and effect from and after its passage, approval and publication as provided by law.

Section Five - Publication

This Ordinance shall be published in book or pamphlet form as provided by the Illinois Municipal Code.

Section Six – Saving Clause

If any section, paragraph, clause or provision of this Ordinance is declared by a court of law to be invalid or unconstitutional, the invalidity or unconstitutionality thereof shall not affect the validity of the remaining provisions of the Village's Municipal Code, which are hereby declared to be separable.

Section Seven – Recording

This Ordinance shall be entered into the minutes and upon the journals of the Board of Trustees of the Village of Oak Brook.

Remainder of page intentionally left blank; roll call to follow

PASSED THIS 22nd day of October 2024.

Ayes: _____

Nays: _____

Absent: _____

APPROVED THIS 22nd day of October 2024.

_____
LAURENCE E. HERMAN,
Village President

ATTEST:

_____
NETASHA SCARPINITI,
Village Clerk

EXHIBIT A

TITLE 13
ZONING REGULATIONS

CHAPTER 1
TITLE, PURPOSE AND INTENT

SECTION:

13-1-1 : Title

13-1-2 : Purpose And Intent

13-1-3 : Interpretation Of Provisions

13-1-4: Separability

13-1-1 : TITLE:

This Title shall be known, cited and referred to as the ZONING ORDINANCE OF THE VILLAGE OF OAK BROOK, ILLINOIS OF 1966. (Ord. G-60, 3-22-1966)

13-1-2 : PURPOSE AND INTENT:

A. Purpose: This Title is adopted to the end that:

1. Adequate natural light, pure air and safety from fire and other dangers may be secured.

2. Value of land and structures throughout the Village may be conserved.

3. Congestion in the public streets may be lessened or avoided.

4. Hazards to persons and damage to property resulting from the accumulation or runoff of storm or flood waters may be lessened or avoided.

5. Aesthetic values throughout the Village may be preserved and enhanced.

6. Public health, safety, comfort, morals, convenience and general welfare may otherwise be promoted.

B. Intent: To achieve these ends, this Title sets forth regulations and standards to:

1. Regulate and limit the height and bulk of structures hereafter erected.

2. Establish, regulate and limit setback lines along streets.

3. Regulate and limit the intensity of the use of lot areas, and to regulate and determine the area of open spaces within the surrounding structures.

4. Classify, regulate and restrict the location of trades and industries and the location of structures designed for industrial, business, residential and other specified uses.

5. Divide the entire Village into districts of such number, shape, area and of such different classes as may be suitable.

6. Prohibit structures or uses incompatible with the character of such districts.

7. Fix standards to which structures therein shall conform.

8. Prevent additions to, and alteration or remodeling of, exiting structures in such a way as to avoid the restrictions and limitations lawfully imposed under this Title.

9. Provide for the gradual elimination of structures and uses which are incompatible with the character of the districts in which they are located.

10. Define and limit the powers and duties of the administrative officers and bodies as provided in this Title.

11. Prescribe penalties for the violation of the provisions of this Title, or of any amendment thereto. (Ord. G-60, 3-22-1966)

13-1-3 : INTERPRETATION OF PROVISIONS:

In their interpretation and application, the provisions of this Title shall be held to be the minimum requirements for the promotion and protection of the public health, safety, comfort, morals, convenience and general welfare. In addition:

A. Where the conditions imposed by any provision of this Title upon the: 1) use of land or structures; 2) height and bulk of structures; 3) floor area requirements; 4) lot area and width requirements; and 5) yard and other open space requirements are more restrictive or less restrictive than comparable standards imposed by any other provision of this Title or of any other law, ordinance, resolution, rule or regulation of any kind, the regulations which are more restrictive, or which impose higher standards or requirements, shall govern.

B. This Title is not intended to abrogate any easement, covenant or other private agreement.

C. No use or structure not lawfully existing at the time of the adoption of this Title shall become or be made lawful solely by reason of the adoption of this Title; and to the extent that, and in any manner that, said unlawful structures or use are in conflict with the requirements of this Title, said structure or use remains unlawful under the provisions of this Title. (Ord. G-60, 3-22-1966)

13-1-4 : SEPARABILITY:

It is hereby declared to be the intention of the Village President and Board of Trustees that the several provisions of this Title are separable, in accordance with the following:

A. If any court of competent jurisdiction shall adjudge any provisions of this Title to be invalid, such judgment shall not affect any other provision of this Title not specifically included in said judgment.

B. If any court of competent jurisdiction shall adjudge invalid the application of any provision of this Title to a particular property or structure, such judgment shall not affect the application of said provision to any other property or structure not specifically included in said judgment. (Ord. G-60, 3-22-1966)

CHAPTER 2
DEFINITIONS

SECTION:

13-2-1: Rules Of Word Construction

13-2-2: Definitions

13-2-1 : RULES OF WORD CONSTRUCTION:

In the construction of this Title the rules and definitions contained in this Section shall be observed and applied, except when the context clearly indicates otherwise.

In addition:

A. The present tense includes the future and the future the present; the singular number includes the plural and the plural the singular; the word "shall" is mandatory, and the word "may" is permissive.

B. The material under each caption or heading in this Title shall be construed and limited in a manner consistent with the applicable captions or headings and subheadings. (Ord. G-60, 3-22-1966)

13-2-2 : DEFINITIONS:

The following words and terms, when used in this Title, shall have the meaning set forth after each:

ABUTTING: To have a common property line or district line.

ACCESSORY: A use, structure, or part of a structure, which:

A. Is subordinate to and serves the principal use or structure.

B. Is subordinate in area, extent or purpose to the principal use or structure.

C. Contributes to the comfort, convenience or necessity of occupants of the principal use or structure.

D. Is located on the same lot as the principal use or structure served, with the exception of accessory off-street parking facilities as are permitted elsewhere than on the same lot with the use or structure.

ACCESSORY LIVING UNIT: A detached accessory building that provides living space (as defined by International Residential Code, Chapter 2, Definitions) in a location other than the principal residence. A detached accessory living unit may be located in a pool house, detached garage, or other similar accessory building or structure.
Accessory living unit cannot be used to generate revenue.

ADJACENT: Touching, as distinguished from lying near.

ADJOINING: Touching or contiguous, as distinguished from lying near.

AGRICULTURE: Farming, dairying, pasturage, agriculture, horticulture, floriculture, viticulture and animal and poultry husbandry and accessory uses customarily incidental to normal agricultural activities.

AIRPORT: A lot which is used, or intended, for the landing and takeoff of aircraft, together with all structures located thereon.

ALLEY: A public or private right of way, other than a street, less than thirty feet (30') in width, which right of way normally affords secondary means of access to abutting properties.

APARTMENT: A room or suite of rooms in a multiple-family structure, which is arranged, designed, used or intended to be used as a single housekeeping unit. A private bathroom and basic kitchen facilities, i.e., sink, stove, and refrigerator permanently installed must always be included for each apartment.

ARBOR: A landscape structure or shelter supported by at least 4 columns or poles, consisting of latticework to support climbing shrubs or vines. For the purposes of this Title, an arbor is not a fence and is an accessory structure.

Arbor

ASSISTED LIVING FACILITY: A facility providing housing and services for a group of persons, typically elderly, which may include provision of meals, housekeeping, and personal care assistance and/or other ancillary services.

ALTERATION: A change in size, shape, character or use of a structure.

~~AUTOMOBILE LAUNDRY: A building or portion thereof containing facilities for washing more than two (2) motor vehicles, using production line method.~~

AUTOMOBILE CHARGING FACILITY, RESIDENTIAL: An electrical charging device for licensed electric or hybrid motor vehicles, provided that the charging device and vehicle being charged are completely enclosed within a single-family or multi-family residence or accessory structure.

AUTOMOBILE CHARGING FACILITY, COMMERCIAL: An electrical charging device or group of devices for licensed electric or hybrid motor vehicles, other than those defined as "AUTOMOBILE CHARGING FACILITY, RESIDENTIAL".

AUTOMOBILE MINI-MARKET: An automobile service station which includes the retail sale of merchandise or services not related to the maintenance, service or repair of motor vehicles in addition to the sale of fuel, oil and accessories for motor vehicles. Such use shall be located entirely within the buildable area and the building floor area, including all storage for such use, which may not exceed ~~one~~ two thousand (~~1~~2,000) square feet.

AUTOMOBILE SERVICE ~~STATION~~ FACILITY: A building or portion thereof or lot used for offering for sale at retail to the public, fuels, oils and accessories for motor vehicles; where repair service is incidental, where no storage or parking space is offered for rent and where no motor vehicles or boats are offered for sale or rent. ~~When such dispensing, sale or offering for sale is incidental to the conduct of a public garage, the premises are classified as a public garage.~~

AWNING: A roof like projection, rigid or retractable in operation, which projects from the wall of a building.

BASEMENT. ~~A *story* that is not a *story above grade plane*.~~ That portion of a building that is partly or completely below grade.

(see "*Story above grade plane*")~~BASEMENT: A story having part but not more than one-half (1/2) of its floor to clear ceiling height below grade. When a basement is used for storage, or garages for use of occupants of the building, or other facilities common for the operation and maintenance of the entire building, it shall not be counted as a story.~~

BI-LEVEL: A dwelling having one story at approximate grade level and a second story one-half (1/2) story higher over a habitable basement approximately one-half (1/2) of which basement is above grade level.

BLOCK: A tract of land bounded by streets, or by a combination of street, railroad rights of way, public parks, permanent open space and other lines of demarcation. A block may be located in part beyond the corporate limits of the village.

BOARD OF TRUSTEES: The president and board of trustees of the village of Oak Brook, Illinois.

BUILDABLE AREA: That portion of a lot which meets at least the minimum width requirements and setback lines of the district within which it is located (see definition of

Lot Width, and illustrations in Chapters 6 and 7).

BUILDING: A structure having a roof designed or built for the enclosure, shelter or protection of persons, animals, chattels or movable property of any kind and which is permanently affixed to the land.

BUILDING, ACCESSORY: A subordinate building or portion of a principal building, the use of which is incidental to that of the principal building and customary in connection with that use.

BUILDING, COMPLETELY ENCLOSED: A building with a permanent roof separated on all sides from the adjoining open space or from other structures, by exterior walls or party walls, pierced only by windows and normal entrance and exit doors.

BUILDING, DETACHED: A building surrounded by open space on the same lot.

BUILDING, PRINCIPAL: A ~~nonaccessory~~ building in which the primary use of the lot on which it is located is conducted.

~~BUILDING, TEMPORARY: A building not designed or intended to be permanently located at the place where it is, or where it is intended to be, placed or affixed.~~

BULK: The term used to indicate the size, location and number of structures, including: a) size and height of structures; b) location of exterior walls; c) floor area ratio; d) open space allocated to structures; and e) lot area and lot width.

BURIAL STRUCTURES: Aboveground structures within cemeteries, other than community burial structures, used, or intended to be used, for the entombment of human remains, including, without limitation, mausoleums, columbaria, and other similar structures.

BUSINESS: An occupation, employment or enterprise which occupies time, attention, labor and materials; or wherein merchandise is exhibited or sold or services are offered.

~~CANDLEPOWER: The luminous intensity, as evaluated in effectiveness of stimulating visual sensation, of any radiation in a given direction. The international candle was adopted in 1940 as one-sixtieth (1/60) of the brightness of freezing platinum.~~

CAR WASH: A building or portion thereof containing facilities for washing more than ~~two (2)~~ one (1) motor vehicle~~s~~, using production line method.

CARPORT: A roofed automobile shelter, with two (2) or more open sides.

~~CELLAR: A story having more than one-half (1/2) of its floor to clear ceiling height below grade. A cellar is not included in computing the number of stories for the purpose of height measurement.~~

CEMETERY: Any land or structure dedicated to and used, or intended to be used, for the burial, interment, or entombment of human remains, and related accessory uses.

CEMETERY ACCESSORY STRUCTURES: Structures used in support of and accessory to a cemetery use, including, without limitation, caretaker or similarly used residences, greenhouses, sales offices, storage buildings, administrative offices, and other similar structures accessory to a cemetery.

~~CLINIC, MEDICAL OR DENTAL: A building or portion thereof, the principal use of which is for offices of physicians or dentists, or both, for the examination and treatment of persons on an outpatient basis.~~

~~CLOSED CUP FLASHPOINT: The lowest temperature at which a combustible liquid under the most favorable condition will give off a flammable vapor which will burn immediately.~~

CLUB OR LODGE, PRIVATE: A structure or part thereof used by a not for profit association of persons who are bona fide members and where facilities are restricted to members and their guests. Food and alcoholic beverages may be served on its premises provided they are secondary and incidental to the principal use.

COCKTAIL LOUNGE: An establishment where refreshments having alcoholic contents, as stipulated by law, are sold to be consumed on the premises, but not including restaurants where the principal business is the serving of food, except restaurants where accessory cocktail lounges are permitted by district regulations of this title.

COMMERCIAL THOROUGHFARE: A "roadway", as defined in this section, depicted or described as a principal arterial street or a collector route in the official comprehensive plan and official map of the village, and those local roadways that have substantial footage abutting and adjoining properties zoned ORA or business.

COMMUNITY BURIAL STRUCTURES: Aboveground structures over twenty feet (20') in height used, or intended to be used, for the entombment of human remains, located in or near the center of a cemetery in accordance with their specific applicable regulations in this title, including, without limitation, mausoleums, columbaria, and other similar structures.

CONDOMINIUM: A multiple dwelling or development containing individually owned dwelling units and jointly owned and shared common areas and facilities. These dwelling units may be attached horizontally or vertically. The rights of ownership for a condominium must be determined by a recorded declaration.

CONFORMING STRUCTURE: Any structure which: a) complies with all the regulations of this title governing the district in which said structure is located; or b) is designed or intended for a permitted use or special use, as allowed in this title in the district in which it is located. C) allowed by the authority having jurisdiction in which it is located (check with Village

CORNER: The meeting place of two (2) converging surfaces.

COURT: An open unoccupied space, other than a yard, on the same lot with a building or group of buildings, and which is bounded on two (2) or more sides by such building or buildings.

Data Center: A facility used primarily for the storage, management, processing, and transmission of digital data, which houses computer and/or network equipment, systems, servers, appliances and other associated components related to digital data operations. Such facility may also include air handlers, power generators, water cooling and storage facilities, utility substations, and other associated utility infrastructure to support sustained operations at a data center.

DAYCARE CENTER: A facility in which are received three (3) or more children, not of common parentage, apart from their parents or guardians, for part or all of the day, but not later than nine o'clock (9:00) P.M. The term "daycare center" includes, but is not limited to, nursery schools, childcare centers, day nurseries and playgroups, but does not include kindergartens or nursery schools operated by public or private elementary or secondary school systems.

~~DEVELOPMENT PLAN: A proposal for the development of a parcel of land zoned or to be zoned ORA3 containing a statement setting forth the information specified in subsection 13-10C-6C1 of this title, and a plat setting forth graphically the information specified in subsection 13-10C-6C2 of this title.~~

DIRECTOR OF ~~COMMUNITY~~ DEVELOPMENT SERVICES: The official of the village, duly appointed and designated as its director of ~~community~~ development services.

DISABILITY: Any person who has a physical or mental impairment that substantially limits one or more major life activities; has a record of such impairment; or is regarded as having such an impairment.

DOCTOR'S OFFICE: A doctor's office is a medical facility which is not a medical clinic, and consists of up to four treatment rooms, either general practitioners or specialists, which receive and treat patients. Patients at a doctor's office are typically visiting for regular check-ups and do not require any intense form of hospitalization. A doctor's office shall not exceed one (1) doctor.

DOG RUNS/KENNELS: Enclosures constructed for the purpose of containing dog(s) outside of the principal structure on a property. Not to exceed 5% of the area of the principal structure.

DRIVE-IN ESTABLISHMENT: A structure or part thereof in which are provided facilities primarily for serving patrons parked in automobiles on the premises.

DUPLEX: A structure containing two (2) dwelling units, each of which has separate and direct access to the outside.

DWELLING: A building or portion thereof designed or used exclusively for residential uses, including single-family and multiple-family dwellings, but not including mobile homes or other trailers, or lodging rooms in hotels, motels or lodging houses.

DWELLING, ATTACHED (TOWNHOUSE, GROUP, ROW OR GARDEN APARTMENT): A multiple-family dwelling originally designed and constructed to accommodate three (3) or more dwelling units, with the dwelling units joined together by party wall or walls. Each unit

shall have its own ground floor entrance and living space.

DWELLING, DETACHED: A dwelling which is surrounded on all sides by open spaces on the same lot.

DWELLING, MULTI-FAMILY, AGE-RESTRICTED: An age-restricted or age-targeted development containing two (2) or more dwelling units and which may include independent living, assisted living, or senior congregate living.

DWELLING, MULTIPLE-FAMILY: A dwelling containing two (2) or more dwelling units.

DWELLING, SEMIDETACHED (TOWNHOUSE, GROUP, ROW OR GARDEN APARTMENT): A dwelling joined to one other dwelling by a party wall, or vertical cavity wall, and aboveground physically unifying horizontal structural elements.

DWELLING, SINGLE-FAMILY: A dwelling containing one dwelling unit only.

DWELLING UNIT: One or more rooms which are arranged, designed or used as living quarters for one family only. Individual bathrooms and complete single kitchen facilities, permanently installed to serve the entire family, shall always be included within each dwelling unit.

EFFICIENCY UNIT: A dwelling unit consisting of one principal room, exclusive of bathroom, kitchen, hallway, closets and may contain dining alcove directly off the principal room provided that such dining alcove does not exceed one hundred twenty five (125) square feet in area.

ELECTRIC DISTRIBUTION CENTER: A terminal at which electric energy is received from the transmission system and is delivered to the distribution system only.

ELECTRIC SUBSTATION: A terminal at which electric energy is received from the transmission system and is delivered to other elements of the transmission system and, generally to the local distribution system.

ENCLOSED PARKING: Parking which is housed in a parking structure, or in a portion of the principal building on a lot, which is completely under a permanent roof and with sidewalk enclosures so designed as to screen the parked cars from view from the exterior of the structure. Completely open wall sections shall be permitted only for entrance and exit driveways. Access to all parking spaces shall be from aisles within the structure.

ERECT: To construct or reconstruct or excavate, fill, drain or conduct physical operation of any kind in preparation for or in pursuance of construction or reconstruction or to move a structure upon a lot.

ESTABLISHMENT, BUSINESS: A structure or lot used in whole or in part as a place of business, the ownership or management of which is separate and distinct from the ownership or management of any other place of business located on the same or other lot.

EXISTING CEMETERIES AND STRUCTURES: Any cemetery, and the cemetery structures existing therein, existing as of January 22, 2013.

FALLOUT SHELTER: An accessory structure and use which incorporates the fundamentals for fallout protection - shielding mass, ventilation, and space to live, and which is constructed of such materials, in such a manner, as to afford to the occupants substantial protection from radioactive fallout. It shall not be used for storage purposes, other than for food, clothing, medical supplies and materials required for temporary shelter.

FAMILY: One person or two (2) or more persons each related to the other by blood, marriage or legal adoption, or a group of not more than three (3) persons not all so related, together with ~~his or~~ their domestic servants, maintaining a common household in a dwelling unit. ~~A family may include, in addition thereto, not more than two (2) roomers, boarders or permanent guests - whether or not gratuitous.~~

FENCE: A structure used to delineate a boundary, or as a barrier, or as a means of confinement or for confinement.

FENCE, OPEN: A fence, including gates, which has, over its entirety, fifty percent (50%) of the surface area in open space as viewed from an angle of ninety degrees (90°) from the fence line, except that the required open space in louver-type fences may be viewed from any angle~~, and excluding metal fences with more than seventy five percent (75%) of its surface area open space~~.

FENCE, SOLID: A fence, including gates, which conceals from view from adjoining properties, streets or alleys, activities conducted behind it.

FENCE TYPE STRUCTURE: Any fence, or part thereof, located in the buildable area of a property and not located in any required yard. "Fence type structures" include solid privacy screens and open patio enclosures. A "fence type structure" shall not include any part of a fence located outside of the buildable area of a property.

FLOOR AREA FOR DETERMINING FLOOR AREA RATIO: The sum of the gross horizontal area of the several stories including the basement of a building, measured from the exterior faces of the exterior walls, or from the center lines of walls separating two (2) buildings. The floor area shall also include the horizontal areas on each story devoted to: a) elevator shafts and stairwells; b) mechanical equipment, except that located on roofs whether open or enclosed, i.e., bulkheads, water tanks, and cooling towers; c) habitable attic space as permitted by the building code of the Village; d) interior balconies and mezzanines; e) enclosed porches; and f) accessory uses. The horizontal area in every story of a building devoted to enclosed off-street parking and off-street loading facilities shall not be included in the floor area.

FLOOR AREA FOR DETERMINING OFF-STREET PARKING AND LOADING REQUIREMENTS: Floor area when prescribed as the basis of determining off-street parking and off-street loading requirements shall be the sum of the gross horizontal area of the several stories of a structure taken from glass line to glass line and including the structure's primary and permanent working area, but excluding the basement.

FLOOR AREA RATIO: The numerical value obtained by dividing the floor area within a building or buildings on a lot by the area of such lot. (The floor area ratio as designated for

each district, when multiplied by the lot area in square feet, shall determine the maximum permissible floor area for the building or buildings on the lot).

FOOT-CANDLE: A unit of illumination, equivalent to the illumination at all points which are one foot (1') distance from a uniform point source of one candlepower.

FOOT-LAMBERT: A unit of brightness, usually of a reflecting surface. A diffusion surface of uniform brightness reflecting or emitting the equivalent of the light from one candle at one foot (1') distant over one square foot has a brightness of one foot-lambert.

~~FREE-BURNING: The rate of combustion of a material which burns actively and easily supports combustion.~~

FREQUENCY: Signifies the number of oscillations per second in a sound wave and is an index of the pitch of the resulting sound.

~~GARAGE, PUBLIC: A building or portion thereof, other than a storage garage, designed or used for equipping, servicing, repairing motor vehicles. Hiring, selling and storing of motor vehicles may be included.~~

GARAGE, STORAGE: A building or portion thereof designed or used exclusively for storage of motor vehicles and in which fuels and oils are not sold, except as regulated in this Title, and in which no motor vehicles are equipped, repaired, hired and sold.

GATE: A structure that may be swung, drawn or lowered to block an entrance or passageway. A gate may be part of a fence or may exist separately.

GROSS DENSITY: Ratio between total number of dwelling units on a lot and total lot area in acres. The area to include local streets.

~~GROUND FLOOR AREA: The lot area covered by a principal building measured at grade from the exterior faces of the exterior walls, but excluding open porches or terraces, garages or carports.~~

~~GROUP HOME: A dwelling unit shared by no more than eight (8) persons not related by blood, marriage, adoption, or guardianship, plus their resident staff, who live together as a single housekeeping unit and in a long term family like environment in which staff persons assist in providing care, education and participation in community activities for the residents with the primary goal of enabling residents to live as self-sufficiently as possible in order to function at their maximum potential. A~~ group home may be shared by groups such as, but not limited to, the disabled or persons fifty-five (55) years of age or older, but shall not include halfway houses, ~~hospices, or living quarters which serve persons as an alternative to incarceration for a criminal offense.~~

~~GUEST, PERMANENT: A person who occupies or has the right to occupy a lodging house,~~

~~hotel, apartment hotel or motel accommodation as his place of permanent residence.~~

HABITABLE VEHICLE: A vehicle designed, constructed or modified to permit its use as temporary or permanent living or working quarters, recreational vehicles and campers.

HEALTH CLUB: The meeting place of a group of persons organized for the purpose of improving the general condition of their health through exercise.

~~HELICOPTER: Any rotary wing aircraft which depends principally for its support and motion in the air upon the lift generated by one or more power driven rotors rotating on a substantially vertical axis.~~

HELIPORT (NOT FOR FREIGHT): Any area of land, water or structural surface which is designed, used or intended to be used for the landing and takeoff of helicopters and any pertinent areas which are designed, used or intended to be used for a heliport building or other facilities which have received a certificate of approval from the Division of Aeronautics, State of Illinois, Department of Transportation and a special use permit from the Village to operate said heliport.

HOME OCCUPATION: A gainful occupation or profession conducted entirely within a dwelling unit.(as further described in Chapter 6).

HOTEL: A building or buildings, sometimes designated as a motel, motor inn or highway hotel, containing not less than fifty (50) lodging rooms, where lodgings are provided for compensation, but excluding apartment hotels as defined in this Section. A hotel may include dining and meeting rooms, and business uses commonly incidental to a hotel operation.

HOTEL, APARTMENT: A building ~~hotel~~ in which ~~less than fifty percent (50%) of the~~ accommodations are in dwelling units occupied or intended for occupancy by permanent guests. Such rentals are subject to the same Municipal Hotel Tax as defined in Title 5, Chapter 5 of this Village Code.

HOTEL, CONDOMINIUM: A building in which accommodations are in dwelling units owned as condominium units sold to purchasers, and where it is intended that the condominium units may be utilized as part of the hotel's rooms inventory to be rented to the public, only when operated by the hotel management. Such rentals are subject to the same Municipal Hotel Tax as defined in Title 5, Chapter 5 of this Village Code.

INSTITUTION: A building occupied by a religious, educational, scientific or charitable not-for-profit corporation or organization, wholly for public or semi-public use.

JUNKYARD: A lot, with or without accessory structures, used for the abandonment, storage, keeping, collecting, buying, selling, exchanging, baling, packing, disassembling or handling scrap or discarded materials, including vehicles, machinery and equipment not in operable condition, or parts thereof, and other metals, paper, rags, rubber tires and bottles.

KENNEL Commercial: A place or premises where dogs, cats or other household domestic animals are maintained, boarded, bred or cared for, in return for remuneration, or are kept for the purpose ofsale.

LAMBERT: 1/929 of a foot-lambert, usually used to designate intrinsic brightness of light sources.

LAUNDERETTE: A business that provides coin-operated self- service washing, drying, dry-cleaning or ironing facilities, provided no pickup or delivery service is maintained.

LOADING BERTH: A space within the principal building or on the same lot as the principal building providing for the standing, loading or unloading of trucks and with access to a street or alley.

~~LODGING HOUSE: A building originally designed for and used as a single or two-family dwelling, all or a portion of which contains lodging rooms which accommodate persons who are not members of the keeper's family and where lodging or meals, or both, are provided for compensation for three (3) or more persons.~~

~~LODGING ROOM: A room or suite of rooms rented as sleeping and living quarters, but without cooking facilities. In a suite of rooms, each room which provides sleeping accommodations shall be counted as one lodging room for the purpose of this Title.~~

LOT: A parcel of land consisting of adjoining parts which, at the time of filing for a building permit, is designated by its owner or developer as a parcel to be used, developed, or built upon as a unit, under single ownership or control. Therefore, a "lot" may or may not coincide with a lot of record.

LOT AREA: The area of a horizontal plane bounded by lot lines. For the purposes of meeting minimum lot area requirements, the land area of a lot used for providing private access rights of way shall not be included.

LOT, CORNER: A lot of which at least two (2) adjacent sides abut for their full lengths upon streets; provided, that the interior angle of the intersection of such two (2) sides is less than one hundred thirty-five degrees (135°).

LOT COVERAGE: Lot Coverage includes all improvements, principal structure and accessory structures (i.e. driveways, patios, pools, sheds, garages, accessory living units, pool houses, and sports courts, etc.).

LOT, INTERIOR: A lot that is not a corner lot.

LOT LINE ADJOINING A STREET: A front lot line, the side lot line of a corner lot which abuts a street, or a rear lot line of a through lot.

LOT, FLAG: A lot with access provided to the bulk of the lot by a narrow corridor of property which abuts the street.

LOT LINE, FRONT: The boundary of a lot abutting a street. On a corner lot, either lot line

may be construed to be the front lot line by the owner.

LOT LINE, INTERIOR: A lot line which does not abut a street.

LOT LINE, REAR: An interior lot line which is most distant from and is or is ~~almost~~ within 45 degrees of parallel to the front lot line, and in the case of an irregular- or triangular-shaped lot, ~~a line ten feet (10') in length within the lot, which is parallel to and~~ the corner point which is at a maximum distance from the front lot line.

LOT LINE, SIDE: An interior lot line which is not a front lot line or a rear lot line.

LOT LINES: The property lines bounding a lot.

LOT OF RECORD: A single lot which is part of a subdivision, the plat of which has been recorded in the office of the Recorder of Deeds of DuPage County, Illinois, which has a minimum lot area equal to or greater than ten thousand (10,000) square feet and a minimum lot width equal to or greater than sixty feet (60'); or any lot legally created prior to November 9, 1971, which: a) has a minimum lot area equal to or greater than ten thousand (10,000) square feet and a minimum width equal to or greater than sixty feet (60'); b) for which an assessment plat has been filed with the recorder of deeds of DuPage County, Illinois, pursuant to the provisions of 35 Illinois Compiled Statutes 205/35.

LOT, REVERSED CORNER: A corner lot, the street side lot line of which is substantially a continuation of the front lot line of the first lot to its rear.

LOT, THROUGH: A lot having frontage on two (2) streets, but excluding corner or reversed corner lots.

LOT WIDTH: The length of a line parallel to the street measured at the front lot line, except on a curvilinear street where it shall be a line parallel to the street measured at the setback line.

MANUFACTURING ESTABLISHMENT: A lot and structure, the principal use of which is manufacturing, fabricating, processing, assembling, repairing, storing, cleaning, servicing, or testing of materials, goods or products.

MARQUEE: A rooflike structure of a permanent nature which projects from the wall of a building.

MEDICAL CLINIC: A healthcare facility that is not a doctor's office but is primarily devoted to the care of outpatients who are treated without staying at the facility overnight. Either publicly or privately owned, medical clinics typically cover the primary healthcare needs of the population within the community. A medical clinic requires more than one (1) doctor.

MEMORIAL STRUCTURES: Aboveground structures within cemeteries: a) installed for the purpose of marking, commemorating, or honoring a deceased person and b) not used for the aboveground entombment of human remains, including, without limitation, grave stones, family estate markers, ornamental benches, vases and other decorative structures, and similar aboveground structures.

MICROBREWERY OR BREW PUB: A brewery that brews beer primarily for sale and is dispensed directly from the brewery's storage tanks. Total production capacity shall not exceed 15,000 barrels per calendar year (465,000 gallons). One (1) U.S. barrel is equivalent to thirty-one (31) gallons.

MICRODISTILLERY: A small-scale artisan manufacturing business that blends, ferments, processes, packages, distributes, and serves alcoholic spirits on and off the premises and produces no more than 15,000 gallons per calendar year on-site. The micro distillery facility may include an ancillary tasting room and retail component in which guests/customers may sample and purchase the product. Offsite distribution of alcoholic beverages shall be consistent with state law.

MICROWINERY: Combination retail, wholesale and small-scale artisan manufacturing business that blends, ferments, processes, packages, distributes and serves wine for sale on or off-site, and produces no more than 100,000 gallons per year. The micro winery facility may include an ancillary tasting room and retail component in which guests/customers may sample and purchase the product. Offsite distribution of the vinous beverages shall be consistent with state law.

~~MICRON: A unit of length, equal to one-thousandth part of one millimeter (0.001 mm).~~

MOBILE FOOD VENDING (Food Trucks). A licensed, motorized vehicle or mobile food unit which is readily movable, motorized-wheeled vehicle or a towed vehicle where food items are sold to the general public, but which does not include mobile vending carts. A mobile food vehicle must be owned and operated by the owner, or agent of a licensed food establishment.

MOBILE HOME: A trailer designed and constructed or used for dwelling purposes which contains cooking, sanitary and electrical facilities, and has a gross floor area of four hundred twenty (420) square feet or more.

MOTOR VEHICLE: A passenger vehicle, habitable vehicle, truck, truck trailer, trailer or semitrailer propelled or drawn by mechanical power.

NAMEPLATE: A sign indicating the name and address of a building, or the name of an occupant thereof, and the practice of a permitted occupation therein.

NATURAL GROUND LEVEL: The existing elevation, prior to any movement of organic or nonorganic matter which would require the issuance of a permit under the ordinances of the village, or the proposed elevation as depicted on a subdivision grading plan approved by the village, or as otherwise reasonably determined by the village engineer.

NO ACCESS STRIP: A strip of land within and along a rear lot line of a through lot adjoining a street which is designated on a recorded subdivision plat or property deed as land over which motor vehicular travel shall not be permitted.

NONCONFORMING STRUCTURE: A structure lawfully established which: a) does not comply with all the regulations of this title governing the bulk of the district in which such structure is located; or b) is designed or intended for a nonconforming use.

NONCONFORMING USE: A structure and the use thereof or the use of land that does not conform with the regulations of this title governing use in the district in which it is located but which conformed with all of the codes, ordinances and other legal requirements applicable at the time such structure was erected, enlarged or altered, and the use thereof or the use of land was established.

~~NURSERY SCHOOL: A building containing facilities for the part time care of five (5) or more children of preelementary school age in addition to the dwelling unit of the family residing therein.~~

NURSING HOME: A building containing facilities for the care of and occupancy by aged, chronically ill, infirm or incurable persons, or a place of rest for those persons suffering bodily disorders, in which three (3) or more persons not members of the family residing on the premises are received, and provided with food, shelter and care, but not including hospitals, clinics or similar institutions devoted primarily to the diagnosis and treatment of disease or injury, maternity cases or mental illness.

OCTAVE BAND: A method of dividing the range of sound frequencies into octaves in order to classify sound according to pitch.

ODOR: The minimum concentration of odorous matter in the air that can be detected as an odor.

~~ODOR THRESHOLD: The minimum concentration of odorous matter in the air that can be detected as an odor. Odor thresholds for many materials and compounds can be found in table III, chapter 5, of "Air Pollution Abatement Manual", copyrighted 1951 by the Manufacturing Chemists Association, Inc., Washington, D.C.~~

OFF STREET PARKING FACILITY: A lot which is improved and used or a structure which is designed and used exclusively for the storage of passenger motor vehicles, either for accessory off street parking spaces or commercial off street parking spaces. T ~~When t~~he parking structure is an accessory building, it shall be compatible in appearance with the principal building. An off-street parking facility shall not be a principal use.

OPEN LAND: A single parcel of land in its natural state or used for agriculture, or outdoor recreational uses upon which there are located only structures incidental to the operation of such uses and upon which building coverage does not exceed two percent (2%) of the area.

OPEN SALES LOT (Automobile Sales): A lot occupied or used for the purpose of buying, selling, or renting merchandise stored or displayed out of doors prior to sale. Such merchandise includes automobiles, trucks, motor scooters, motorcycles, boats or similar commodities.

OPEN SPACE: Consisting of planted areas (including planted surfaces of parking decks), forests, lagoons, watercourses, storm water swales and retention areas, pedestrian, bicycle, and bridle paths and walkways, with the maximum practicable retention of forests and other natural vegetation.

PARKING SPACE: A space, enclosed in a building or unenclosed, used for the parking of one automobile and which is accessible to and from a street or alley.

PARKING STRUCTURE: A single or multi-level structure intended for the use of vehicular parking, as opposed to an uncovered surface parking lot. This definition includes both stand-alone parking garages and structured parking as incorporated into a building, the primary purpose of which is not parking (i.e., rooftop or basement parking areas).

PARTICULATE MATTER: Finely divided solid or liquid matter, other than water, which is released into the atmosphere.

PARTY WALL: An interior wall of adjoining buildings extending from its footing to the underside of the roof, and which separates and is in common use by such adjoining buildings.

PERFORMANCE STANDARD: Criteria established to control smoke and particulate matter, noise, odor, toxic matter, vibration, fire and explosion hazards, glare and heat and radiation hazards generated by or inherent in uses of land or structures.

PERGOLA: An arbor formed of horizontal trelliswork supported on columns or posts, over which vines or other plants may be trained. (Also see definition of Arbor). For the purposes of this Title, a pergola is not a fence and is an accessory structure.

PERSONAL SERVICE ESTABLISHMENTS: Personal services include those establishments which provide advice, designs, information, commercial education, consultation, job placement, advertising, finance, insurance and real estate services, generally from an office with no on-site storage of goods. This includes all types of business offices and service-type businesses where service is basically on an individual-to- individual or firm-to-firm basis, as opposed to services which are performed on objects or personal property.

~~PLAN COMMISSION: The plan commission of the village of Oak Brook, Illinois 2 .~~

PLANNING & ZONING COMMISSION: The Planning and Zoning Commission of the Village of Oak Brook is responsible for items of Section 13-14-4 and Section 13-14-7.

PRESERVATION PLAN: A proposal for residential development of existing building or buildings of historical, architectural or cultural significance containing the information required in subsection 13-6-4D2 of this title.

PRESERVATION RESTRICTION: A right, whether or not stated in the form of a restriction, easement, covenant or condition, in any deed, will or other instrument executed by or on behalf of the owner of the land or in any order of taking, appropriate to the preservation of areas, places, buildings or structures to forbid or limit acts of demolition, alteration, use or other acts detrimental to the preservation of the areas, places, buildings or structures of historical, architectural or cultural significance.

PRESERVATION VISTA: A required open area on a lot measured from the principal structure to the lot lines or right of way, whichever is closer, within which no building or structure is permitted, except as specifically authorized pursuant to an approved preservation plan.

PRINCIPAL CORNERS: Not more than five (5) corners of a structure, two (2) of which are the corners having the lowest and next lowest elevations of all corners in the structure at the point where they intersect natural ground level.

PRINCIPAL BUILDING LOT COVERAGE: The horizontal area measured from the outside of the exterior walls of the ground floor of the principal building on a lot.

~~PYROPHORIC DUST: A dust in a finely divided state in such concentration as to be combustible or explosive in air.~~

~~RADIATION HAZARDS: The deleterious and harmful effects of all ionizing radiation which shall include all radiation capable of producing ions in its passage through other matter. Such radiations shall include, but not be limited to, electromagnetic radiations such as X-rays and gamma rays and particulate radiations such as electrons or beta particles, protons, neutrons and alpha particles.~~

RESEARCH LABORATORY: A building or group of buildings in which are located facilities for scientific research, investigation, testing or experimentation, but not facilities for the manufacture or sale of products, except as incidental to the main purpose of the laboratory.

~~RESERVOIR PARKING SPACES: Those off street parking spaces allocated for temporary standing of automobiles awaiting entrance to a particular establishment.~~

RETAIL ESTABLISHMENT: Any physical business establishment or facility operated by a retailer engaged in the sale of tangible personal property or services for personal use with individual consumers, whether for- or not- for profit, that maintains stock or supply of the tangible property being offered by the retailer on-premises, with the purpose of facilitating, engaging in, and finalizing related Selling Activities directly with the end user.

RETAIL; DISPLAY SHOWROOM: Any physical business establishment or facility operated by a seller engaged in the retail sale of tangible personal property, whether for- or not- for profit, that maintains no available stock or supply of the tangible property primarily being offered by the seller on-premises, and whereby the facilitation and processing of Selling Activities occur off-premises.

~~RINGELMANN CHART: The chart described in the U.S. bureau of mines information circular 6888, on which are illustrated graduated shades of gray for use in estimating the light obscuring capacity of smoke and smoke density.~~

~~RINGELMANN NUMBER: The number of the area on the Ringelmann chart that coincides most nearly with the visual density of emission or the light obscuring capacity of smoke.~~

ROADWAY: That portion of a street which is used or intended to be used for the movement of vehicles.

SELLING ACTIVITIES: refers to the critical business-to-consumer activities conducted by a business engaged in the sale of tangible personal property at retail extending from the

preparation for, and the obtaining of, orders for goods to the final consummation of the sale by the passing of title to, and payment of the purchase price from, the end user of such tangible personal property.

~~SENIOR CONGREGATE LIVING: Age-restricted or age-targeted housing for ages fifty-five (55) years or older, where limited or no assistance with daily living activities is needed by the residents and a state license is not required. "Senior congregate living" is a level of senior housing between age-restricted independent living facilities and assisted living facilities. The main difference between senior congregate living and assisted living is that senior congregate living facilities do not offer assistance with daily living activities.~~

SENIOR HOUSING: A multiple-family structure containing dwelling units controlled by a public body, nonprofit corporation for persons fifty five (55) years or older. Types of projects that fall under this definition include: independent living; assisted living; senior congregate living, and residential care facilities.

SETBACK: The minimum horizontal distance between a ~~street line/~~property line, ~~required side yard or required rear yard~~ and any part of a structure or any edge of the area of operation of a principal use when no structure is involved. For single-family homes, the setback is measured between the ~~street~~ property line, ~~side yard or rear yard~~ and the outside edge of any attached structural protrusion of the structure and/or eave (excluding gutters and light fixtures).

SHORT-TERM RESIDENTIAL RENTAL: A Residential Structure, as defined herein, offered for rent for a period which does not exceed thirty (30) consecutive days to a single entity. The term "Short-Term Residential Rental" shall not include hotels.

SHORT-TERM RESIDENTIAL RENTAL PROPERTY OWNER: The individual or entity which has title to the property which is the subject of a Short-Term Residential Rental.

SIGN, POLITICAL: A sign or poster concerning candidates for office, public issues or similar matters. Such signs shall not exceed six (6) square feet in size, shall not be illuminated in any manner, shall not be affixed to any public utility, pole, tree or natural object, nor be located within a public right of way, nor create a safety or sight distance problem.

SMOKE: The visible discharge from a chimney, stack vent, exhaust or combustion process which is made up of particulate matter.

~~SMOKE UNIT: The number obtained when the smoke density in the Ringelmann number is multiplied by the time of emission in minutes. For the purpose of this calculation: a) a Ringelmann density reading shall be made at least once a minute during the period of observation; b) each reading is then multiplied by the time in minutes during which it is observed; and c) the various products are then added together to give the total number of smoke units observed during the entire observation period.~~

SOUND LEVEL: The intensity of sound of an operation or use as measured in decibels.

SOUND LEVEL METER: An instrument standardized by the American Standards Association

for the measurement of the intensity of sound.

SPECIALTY RETAIL PROGRAM: One or more of the following uses and structures, when located within designated, interior areas of a shopping center, in districts where permitted as a special use, and where authorized as a special use: a) permanent pavilions and kiosks for the preparation, sale and consumption of food and beverages, including adjacent outdoor seating; b) seasonal, portable carts (also referred to as "mobile units" or "RMUs") for the sale of prepackaged food and beverages, including adjacent outdoor seating; c) seasonal merchandising zones containing a defined number of portable carts selling primarily nonfood merchandise and packaged food gift items not intended for immediate consumption; d) defined zones for product introduction or promotional activities, such as demonstrations and fashion shows; and e) entertainment and performance zones, including tables and chairs. "Seasonal" shall mean that weather permits the operation of the portable carts.

STABLE, PRIVATE: A private stable is any building which is located on a lot on which a dwelling is located, and which is designed, arranged, used or intended to be used for housing horses for the private use of occupants of the dwelling.

STABLE, PUBLIC: A building where horses are kept for remuneration, hire or sale.

STORY: That portion of a building, other than a basement, included between the top surface of the next floor or roof above, except that a space used exclusively for the housing of mechanical services of the building shall not be construed to be a story if access to such space may be had only for maintenance of such services. The floor of a story may have split levels provided that there are not more than four feet (4') difference in elevation between the different levels of the floor. A basement shall be counted as a story and a mezzanine floor shall be counted as a story when it covers over one-third (1/3) of the area of the floor next below it, or if the vertical distance from the floor next below it to the floor next above it is twenty-four feet (24') or more.

STORY ABOVE GRADE PLANE. Any *story* having its finished floor surface entirely above *grade plane*, or in which the finished surface of the floor next above is:

1. More than 6 feet (1829 mm) above *grade plane*; or
2. More than 12 feet (3658 mm) above the finished ground level at any point.

STORY, HALF: A partial story under a gable, hip or gambrel roof, the wall plates of which on at least two (2) opposite exterior walls are not more than three feet (3') above the floor of such story.

STREET: A permanent public or private right of way which affords a primary means of access to abutting property.

STREET FRONTAGE: All of the property fronting on one side of a street between two (2) intersecting streets, or in the case of a dead end street, all of the property along one side of the street between an intersecting street and the end of such dead end street.

STREET, INTERNAL: A street not located along the exterior boundaries of a planned

development.

STREET LINE: The street right of way line.

STRUCTURAL ALTERATION: Any change in the supporting members of a structure, such as bearing walls, columns, beams or girders; or any substantial change in the roof or in the exterior walls, excepting such repair or replacement as may be required for the safety of the building.

STRUCTURE: Anything constructed or erected, the use of which requires more or less permanent location on the ground or attached to something having a permanent location on the ground, including, but not limited to, buildings, signs and pavements.

STRUCTURE HEIGHT: ~~The height of a structure as measured from a base elevation determined by averaging the elevations of the principal corners in the perimeter wall of the structure at natural ground level to the highest point of the structure.~~ See section 13-3-8 of this title.

~~THREE COMPONENT MEASURING SYSTEM: Instruments which measure simultaneously earthborne vibrations in horizontal and vertical planes.~~

~~TOWNHOME: A one-family dwelling unit, with a private entrance, which is part of a structure which contains three (3) or more dwelling units which are attached horizontally.~~

~~TOWNHOUSE, GROUP, ROW OR GARDEN APARTMENT: A. A dwelling joined to two (2) other dwellings by party walls, vertical cavity walls, or aboveground physically unifying horizontal structural elements;~~

~~B. A dwelling joined to one other dwelling by a party wall, and aboveground physically unifying horizontal structural elements.~~

TOWNHOME OR TOWNHOUSE (Attached Dwelling): A multiple family dwelling designed and constructed to accommodate ~~three (3~~) two (2) or more dwelling units, with those units joined together by party wall or walls. Each unit shall have its own ground floor entrance and living space.

~~TOXIC MATTER: Those materials which are capable of causing injury to living organisms by chemical means.~~

TRAILER: A vehicle or portable structure which may be used as a conveyance on streets and highways by attachment to a motor vehicle.

TRELLIS: A framework of light wooden or metal bars, chiefly used as a landscape structure to support for fruit trees or climbing plants. For the purposes of this Title, a trellis is an accessory structure and is not a fence. Freestanding trellis' shall not exceed six feet (6') in height and ten feet (10') in length.

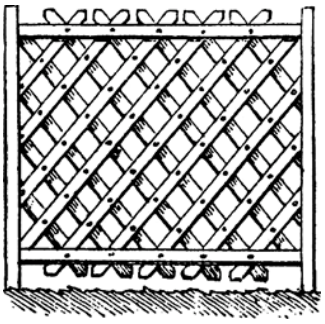

Trellis

USE: The purpose of activity for which the land and structures thereon is designed, arranged, or intended, or for which it is occupied or maintained, and shall include any manner of performance of such activity with respect to the performance standards of this title.

USE, LAWFUL: The use of any structure or land that conforms with all of the regulations of this title or any amendment hereto and which conforms with all of the codes, ordinances, and other legal requirements, as existing at the time of the enactment of this title or any amendment thereto, for the structure or land that is being examined.

USE, PERMITTED: A use which is or may be lawfully established in a particular district provided it conforms with all requirements, regulations, and when applicable, performance standards of this title for the district in which such use is located.

USE, PRINCIPAL: The dominant use of land or structures as distinguished from a subordinate or accessory use.

USE, SPECIAL: A use that has unusual operational, physical or other characteristics that may be different from those of the predominant permitted uses in a district, but which is a use that complements and is otherwise, or can be made, compatible with the intended overall development within a district. Compliance with special standards not necessarily applicable to other permitted uses or special uses in the district shall be required for a special use, as regulated in this title.

VEHICLE: Every device, in, upon or by which any person or property is or may be transported or drawn upon a highway except for devices moved by human power or used exclusively upon stationary rails or tracks.

VIBRATION: The periodic displacement, measured in inches, of earth at designated frequency cycles per second.

VILLAGE: The village of Oak Brook, Illinois.

VILLAGE CLERK: The village clerk of the village of Oak Brook, Illinois.

VILLAGE ENGINEER: The official of the village, duly appointed and designated as the village engineer.

VILLAGE PRESIDENT: The village president of the village of Oak Brook, Illinois.

WET DRAINAGEWAY: Any stream, creek, brook, branch, natural or artificial depression, slough, gulch, reservoir, lake, pond or natural or manmade drainageway in, or into which, stormwater runoff or floodwaters flow regularly.

YARD: A required open area on a lot which is unobstructed from its lowest level to the sky, except as otherwise provided in this title.

YARD ADJOINING A STREET, SIDE: A yard which is bounded by the front yard line, side yard adjoining a street line, rear yard line and side lot line adjoining a street.

YARD, FRONT: A yard which is bounded by the side lot lines, front lot line and the front yard line.

YARD, INTERIOR SIDE: A side yard which adjoins another lot or an alley separating such side yard from another lot.

YARD LINE, FRONT: A line in a lot that is parallel to the front lot line and which is not nearer to the front lot line at any point than the required front yard depth.

YARD LINE, REAR: A line in a lot that is parallel to the rear lot and which is not nearer to the rear lot line at any point than the required rear yard depth. However, in the case of irregular or triangle shaped lots, the rear yard line location shall be formed by an arc originating at the corner point as defined in this section.

YARD LINE, SIDE: A line in a lot that is parallel to the side lot line and which is not nearer to the side lot line at any point than the required side yard depth.

YARD, REAR: A yard which is bounded by side lot lines, rear lot line and the rear yard line. In the case of irregular or triangle shaped lots, the rear yard dimension shall be determined by an arc originating at the corner point as defined in this section.

YARD, SIDE: A yard which is bounded by the rear yard line, front yard line, side yard line and side lot line.

~~ZONING BOARD OF APPEALS: The zoning board of appeals of the village of Oak Brook, Illinois, as created in this code 3 .~~

~~ZONING COMMISSION: The zoning commission of the village of Oak Brook, Illinois.~~

ZONING DISTRICT MAP: The zoning district map of the village of Oak Brook, Illinois.

ZONING DISTRICTS: The districts into which the village of Oak Brook, Illinois, has been divided as set forth on the zoning district map, for the purpose of zoning regulations and requirements. (Ord. G-60, 3-22-1966; Ord. G-135, 6-22-1971; Ord. G-142, 1-25-1972; Ord.

G-178, 12-9-1975; Ord. G-180, 4-13-1976; Ord. G-203, 12-14-1976; Ord. G-215, 4-26-1977; Ord. G-233, 5-31-1978; Ord. G-305, 9-8-1981; Ord. G-328, 8-24-1982; Ord. G-420, 12-13-1988; Ord. G-448, 7-10-1990; Ord. G-449, 8-14-1990; Ord. G-510, 6-8-1993; Ord. G-518, 8-10-1993; Ord. G-695, 3-26-2002; Ord. G-721, 6-10-2003; Ord. G-733, 11-11-2003; Ord. G-

903, 11-10-2009; Ord. G-916, 1-12-2010; Ord. G-934, 9-28-2010; Ord. G-989, 1-22-2013; Ord. S-1559, 2-12-2019; Ord. G-1227, 1-24-2023)

~~Notes~~

~~1~~ ~~1. See Title 14 of this Code.~~

~~2~~ ~~1. See title 2, chapter 1 of this code.~~

~~3~~ ~~1. See title 2, chapter 8 of this code.~~

CHAPTER 3
GENERAL ZONING PROVISIONS

SECTION:

13-3-1: Control Over Use

13-3-2: Control Over Bulk

13-3-3: Lot Requirements

13-3-4 : Yards

13-3-5 : Setbacks Along Streets

13-3-6 : Accessory Uses And Structures

13-3-7 : Trailers, Boats And Habitable Vehicles

13-3-8: Structure Height

13-3-9 : Public Utilities

13-3-10 : Performance Standards

13-3-11 : Mechanical Equipment To Be Screened

13-3-12: Access

13-3-13: Property Abutting Or Adjoining Conservation/Recreation District

13-3-14: Driveway Gates

13-3-15: Permanent Entryway Canopies

13-3-16: Portable Storage Units

13-3-17 : Fence Regulations

13-3-18: Cannabis Business Establishments Prohibited

13-3-1 : CONTROL OVER USE:

A. The use of land and the erection, alteration and use of structures shall be limited to:

1. Uses lawfully established on the effective date of this title, subject to the regulations set forth in chapter 14 of this title.

2. Permitted uses or special uses permitted in the zoning district in which the land or structure is located.

Subject to the above limitations, no building or land shall be used, and no building shall be erected or altered for any purposes other than permitted in the zoning district in which the land or structure is located.

B. Where a use which is classified as a special use by this title exists as of the date of the first zoning ordinance for the village, it shall be considered to be a lawful special use.

C. Where a building permit for a structure has been issued in accordance with law prior to the effective date of this title and where construction has begun not more than six (6) months after such effective date and is being prosecuted to completion, said structure may be completed in accordance with such building permit and may be occupied upon completion under a certificate of occupancy for the use originally designated, subject to the provisions of chapter 13 of this title. (Ord. G-678, 6-26-2001)

13-3-2 : CONTROL OVER BULK:

A. New and existing structures shall not be enlarged, constructed, reconstructed, structurally altered, converted or relocated in such a manner as to conflict with the bulk regulations for the district in which such structures are located except as provided for in this section or provided by relief granted pursuant to the provisions of chapter 14 of this title.

B. The provisions of this section shall apply to vacant lots and lots with existing dwellings in residential zoning districts.

C. Existing residential zoning district lots of record at the effective date of the first zoning ordinance of the village (ordinance G-60 adopted on March 22, 1966), or upon annexation shall have side yards of ten percent (10%) of the lot width or the side yard requirements of the underlying zoning district, whichever is less.

Required side yards shall be not less than ten feet (10') in depth; except a side yard may be not less than eight feet (8'), provided the adjoining lot contains a dwelling with an attached garage or carport adjacent to such side yard.

Where, due to existing building eaves, such lots have a legally established side yard(s) less than ten percent (10%) of lot width, second floor additions, in-line additions to the front or rear, and repair of the structures, continuing such eave setbacks are permitted.

D. A lot in a residence district at the effective date of the first zoning ordinance of the village (ordinance G-60 adopted March 22, 1966), which is not a lot of record but which is able to meet the requirements of this title as to lot area and width may be used for a single-family detached dwelling; provided, it shall meet all the other requirements of this title with the following additional requirements:

1. A plat of subdivision or an assessment plat will be recorded prior to the issuance of a building permit. The subdivision regulations 1 set forth the requirements pertaining to such plats.

E. A lot in a residence district at the effective date of the first zoning ordinance of the village (ordinance G-60 adopted March 22, 1966), which is not a lot of record and which is unable to meet the requirements of this title as to lot area or width may be used for a single-family detached dwelling; provided, it shall meet all the other requirements of this title with the following additional requirements:

1. The applicant shall furnish, with the application for a building permit, a survey by a duly licensed land surveyor, showing the lot upon which the applicant proposes to erect a single-family detached dwelling and also showing all lots adjacent to said lot with all improvements thereon and widths of the adjoining yards and any projections of structures therein duly plotted on said survey.

2. The applicant shall furnish an affidavit on the following form signed by the owner of record of the lot described in the application for a building permit:

STATE OF ILLINOIS:
COUNTY OF:

LOT OWNERSHIP AFFIDAVIT

Dated:
At:

TO: Director of ~~Community~~ Development Services
Village of Oak Brook

depose(s), and state(s) as follows:

1. That the title holder of record of the premises commonly known as Oak Brook, Illinois, and legally described as follows: (Insert Legal Description)

(Name of Title Holder)having acquired title on_____and have held title continuously since said date.

2. (To be answered only if title holder of record is a corporation or a trust.) (Strike out portions that are not applicable.)

Corporation:

That your affiant is the (president, vice-president, secretary, treasurer) of the title holder of record and has full knowledge of the facts set forth in this affidavit and is authorized to make this affidavit.

Trust:

That your affiant holds a beneficial interest in and to the aforesaid trust, has full knowledge of the facts herein set forth and has full authority to make this affidavit.

3. That an application has been or will be filed for a building permit to erect a building or structure upon the land above legally described.

4. That neither the applicant nor any of his/her predecessors in title have owned any right, title or interest, directly or indirectly, or by any person, firm, corporation or trust, or by any officer, shareholder, director, partner, beneficiary, agent or immediate relative thereof who also holds any right, title or interest directly or indirectly, in or to any of the contiguous lot(s) within a period of ten years prior to the date of the application for a building permit or certificate for buildable site as to zoning, except:

5. That the following are the facts existing as to the lots adjoining and contiguous on all sides of the land as described in paragraph 1:

a. That none of the adjoining and contiguous lots are vacant and unimproved, except:

b. That none of the adjoining and contiguous lots have land in addition to its required side yards and required lot area under the Oak Brook Zoning Ordinance that could be added to the aforedescribed lot, thereby adding to the amount of land available for the subject lot, except:

and said additional land could not be acquired because:

6. That this affidavit is given to induce the Village of Oak Brook to issue a (building permit or certificate of buildable site as to zoning) for the above described premises.

7. Further your affiant sayeth not, except:

SUBSCRIBED AND SWORN
to before me this
day of _____.

Notary Public

3. The ~~d~~Director of ~~community d~~Development Services shall issue a permit for erecting a single-family detached dwelling on the subject lot upon compliance with all of the foregoing provisions and all other applicable provisions of this title, with each required interior side yard reduced to not less than ten percent (10%) of the width of the lot, or the side yard requirement of the underlying zoning district, whichever is less, if all of the below enumerated requirements are met:

a. The subject lot:

(1) Is not adjoining and contiguous to a vacant lot on any side held under common ownership at any time after the year 1966; or

(2) Is not contiguous to an improved lot of record which has one foot (1') or more of an adjoining side yard in excess of the minimum required side yard for the district in which the building or structure is located, which additional side yard land could physically be added to the applicant's lot to increase its width or area or that the owners of the adjoining lots refuse to sell any portion of land that could be added to the applicant's lot to increase the width thereof without reducing the required side yards of the adjoining lots and which additional land the applicant would be willing to purchase; and

(3) Is not owned and has not been owned directly or indirectly or by a nominee of any person, or by an officer, shareholder, director, partner, beneficiary, agent or person related by blood or marriage or by any predecessors in title who also held or hold any right, title or interest in or to either one or both of the contiguous lots after the year 1966 to the date of application for a building permit.

b. Interior side yards shall not be less than ten feet (10') in depth except a side yard may be not less than eight feet (8') provided, the adjoining lot contains a dwelling with an attached garage or carport adjacent to such side yard.

c. The contiguous lots are not owned and have not been owned directly or indirectly or by a nominee of any person or by any officer, shareholder, director, partner, beneficiary, agent or person related by blood or marriage or by person related by blood or marriage or by any predecessors in title, who also held or hold any right, title or interest, directly or indirectly, in the applicant's lot after the year 1966 to the date of the application for a building permit.

d. The subject lot was not used as part of a single or common homesite by or with the consent of the same interests which owned or controlled an adjoining lot after the year 1966 to the date of application for a building permit.

e. In the event that a subdivision plat or an assessment plat has not been recorded, one will be required prior to the issuance of the building permit.

4. In the event that the owner is unable to meet all of the aforesaid additional requirements for a building permit, or for a lot which cannot meet the minimum lot width and lot area of a lot of record, or in the event that the owner either desires to sell or to buy from the owners of a contiguous lot or lots who also desire to either sell or buy, but the parties are unable to agree on a price, then the zoning board of appeals may recommend, and the village president and board of trustees may grant such relief in accordance with the procedures as set forth in this title for variations as deemed appropriate.

5. In no case, shall a contiguous lot from which property is being acquired be made nonconforming or more nonconforming without the necessary approvals in accordance with the procedures as set forth in this title. Plats of resubdivision or revised assessment plats shall be required for such properties.

~~F~~6. Notwithstanding anything contained in this title to the contrary, in the event at any time subsequent to January 1, 1995, private property is dedicated or conveyed to a governmental entity or condemned by a governmental entity (including, without limitation, the Illinois state toll highway authority) for the purpose of widening the public right of way or providing public roadway infrastructure (including, without limitation, right of way for roadway entry or exit ramps), the calculation of floor area ratio shall at all times include within the measurement of the area of the lot in question the area so dedicated, conveyed or condemned, provided that not more than twenty percent (20%) of the lot has been so dedicated, conveyed or condemned, and provided further that a site plan generally accommodating such a dedication, conveyance or condemnation has been reviewed and approved by the village. (Ord. G-678, 6-26-2001)

~~Notes~~

~~1~~ ~~1. See title 14 of this code.~~

13-3-3 : LOT REQUIREMENTS:

A. Buildings On A Lot:

1. On single-family detached residence district lots with permitted uses, there shall be not more than one principal building.

2. In the event that more than one lot of record is necessary to satisfy the requirements of this title, a notice of encumbrance shall be recorded with the office of the county recorder of deeds against all affected lots of record prior to the issuance of any building permit.

B. Lot Divisions: No lot containing a use or structure shall hereafter be divided in order to secure one or more additional lots unless each lot resulting from such division, and including also the lot containing the use or structure, shall have the minimum lot area and lot width as required in this title for the district in which the lot is located and complies with the subdivision regulations of the village 1 . (Ord. G-678, 6-26-2001)

~~Notes~~

~~1~~ ~~1. See title 14 of this code.~~

13-3-4 : YARDS:

A. Yards and other open spaces as required by this title shall be located on the same lot as the principal use or structure, and shall have not less than the minimum depth or area as required in this title for the district in which such use or structure is located, except as otherwise provided for setbacks.

B. On vacant through lots, the front lot line shall be along the street line designated by the ~~d~~Director of ~~community d~~Development Services, except that when a front lot line has been established on one or more lots in the same block and all have front lot lines established along the same street line, the street line designated as the front lot line for such lot or lots shall be the front lot line on all vacant through lots in such block. On through lots, only those uses and structures permitted by this title in front yards shall be located in that part of a rear yard adjoining a street that is equivalent in depth to a required front yard.

C. No legally required yards, open space, or lot area for any use or structure shall be used to satisfy yard, open space or lot area requirements for any other structure or use.

D. No yards allocated to a use or structure existing on the effective date of this title

shall be subsequently reduced or further reduced below the yard requirements of this title, except a yard adjoining a street may be reduced in depth in the event and to the extent the right of way width of such street adjoining such yard is subsequently increased. ~~In the event that the width of the right-of-way is increased, the original required yard and setback requirements, - at the time of construction- are not modified for the life of any legally existing structure or portion thereof.~~

E. Front yards of corner lots may be designated by the owner, provided such yard abuts a street. (Ord. G-678, 6-26-2001)

13-3-5 : SETBACKS ALONG STREETS:

Minimum setbacks on lots abutting a street shall be as required for yards in the district in which they are located and shall be measured from the street line, or from the proposed street line if one has been designated on the official map. Notwithstanding anything contained in this title to the contrary, in the event at any time subsequent to January 1, 1995, private property is dedicated or conveyed to a governmental entity or condemned by a governmental entity (including, without limitation, the Illinois state toll highway authority) for the purpose of widening the public right of way or providing public roadway infrastructure (including, without limitation, right of way for roadway entry or exit ramps), the calculation of minimum setbacks and minimum required yards shall at all times be measured from the street line which existed prior to such dedication, conveyance or condemnation~~, provided that not more than twenty percent (20%) of the lot has been so dedicated, conveyed or condemned, and~~ provided that any newly constructed buildings establish minimum setbacks and minimum required yards on the affected lot (as measured from the new lot line created as a result of said dedication, conveyance, or condemnation) which, at a minimum, equal at least fifty percent (50%) of the minimum setback and minimum required yard which would be required in the absence of this condemnation mitigation provision, and provided further that a site plan generally accommodating such a dedication, conveyance or condemnation has been reviewed and approved by the village board of trustees. (Ord. G-977, 8-14-2012)

13-3-6 : ACCESSORY USES AND STRUCTURES:

A. Authorization Of Accessory Uses And Structures:

1. Is subordinate in extent and purpose to, and serves, a principal structure or use;

2. Is customarily found as incidental to such principal structure or use;

3. Contributes to the comfort, convenience, or necessity of those occupying or being served by the principal use;

4. Except as otherwise expressly authorized by the provisions of this code, is located on the same zoning lot as such principal structure or use; and

5. Is under the same ownership and control as such principal structure or use.

B. General Regulations:

1. Accessory uses and structures shall be compatible with the principal use and shall not be established prior to the establishment of the principal use. No accessory building or structure shall be constructed on any lot prior to the construction of the principal building to which it is accessory.

2. Accessory uses shall not include the keeping, propagation or culture of pigeons, poultry, rabbits, bees, livestock or other non-household animals for profit, except on such lots where the pursuit of agriculture is a permitted principal or accessory use.

3. Except as otherwise regulated for specific principal uses, an accessory structure hereafter erected, altered, enlarged or moved in a lot shall conform with the following:

a. A detached accessory building shall not be nearer than ten feet (10') from the nearest wall of the principal structure.

b. An accessory structure shall not be located in any required yard abutting a street, except in rear yards where they adjoin a thoroughfare and are screened by opaque landscaping expected to reach the height of the applicable structure at full maturity.

c. Accessory uses and structures shall not be located, erected, or altered in required yards, except as provided in subsections B3d, B3g, and D of this section.

d. Detached accessory structures in a required rear yard in a residential district shall:

(1) Be not more than fifteen feet (15') in height except for detached garages that are not constructed with a continuous flat roof (see subsection B3g of this section for detached garage heights).

(2) ~~Cover not more than thirty percent (30%) of the required rear yard (this includes, patios, pools, sheds, garages, accessory living units, pool houses, sports courts, etc.).~~

(2)Detached accessory structures equal to or less than one hundred twenty (120) square feet in total area shall be located at least five feet (5') from the side or rear lot line. Detached accessory structures greater than one hundred twenty (120) square feet in total area shall be located at least ten feet (10') from a side and rear lot line

~~(3) Floor Area: The aggregate floor area of all accessory buildings shall not exceed thirty percent (30%) of the first-floor area of the principal building (as measured by GLA ANSI or equivalent).~~

e. Detached accessory buildings and structures shall not be constructed between the front lot line and the front of the principal building on the lot (except as provided for in subsection B3f).

f. Accessory structures which otherwise are only permitted in required rear yards shall not be constructed within the buildable area between the principal structure and adjacent streets along the front or side lot lines unless a setback equal to double the required front or side yard setback is maintained from the front or side yard lot line to such accessory structure.

g. Detached garages, that are not constructed with a continuous flat roof, constructed in the "buildable" area of a lot will be permitted to be built to the same height as the principal structure. However, detached garages constructed in a required rear yard of a single-family home shall be limited to the following heights:

R1 district: Twenty five feet (25').

R2 district (lots 1 acre or larger): Twenty two and one-half feet (22.5').

R2 district (lots less than 1 acre) and R3 district: Twenty feet (20').

R4 district: Seventeen and one-half feet (17.5').

Any detached garage located in a required rear yard, that is over fifteen feet (15') in height, shall be required to increase the setback one foot (1') for every one foot (1') of increased height over fifteen feet (15'). Detached garages constructed with a continuous flat roof will be limited to a maximum height of fifteen feet (15').

C. Accessory Living Unit:

1. An accessory living unit is a detached accessory building that provides living space in a location other than the principal residence. An accessory living unit may be located in a pool house, detached garage, or other similar accessory building or structure.

2. Accessory living units are not permitted in the Business or Office Districts, or the R-2, R-3, R-4, or R-5 Districts.

3. Only one (1) accessory living unit is permitted per zoning lot in the R-1 District.

4. An accessory living unit originally constructed before January 24, 2023 is permitted. An expansion to an accessory living unit constructed prior to January 24, 2023 shall require a permit and shall comply with these standards. An expansion is considered additional floor area, modifications to room sizes, removal of walls and significant electrical or plumbing work that otherwise modifies the intended use of the dwelling unit.

5. No accessory living unit shall be modified to increase the number of dwelling units.

6. The construction of a new accessory living unit shall require the installation of fire sprinklers in accordance with applicable residential building code regulations.

7. An accessory building containing an accessory living unit shall be similar in architectural style and building materials to the principal use structure.

D. Permitted In Required Yards: Accessory uses and structures are permitted in required yards as follows with the following designations (and subject to the other

provisions of this Code):

F = Yards adjoining streets

S = Interior side yards

R = Rear yards

	F	S	R
Arbors ~~or trellises~~, ~~where trellises are~~ or pergolas not attached to the principal structure	X	X	X
Accessory living unit			X
Commercial awnings or canopies, projecting not more than 15 feet into the required yards	X	X	X
Fallout shelters, detached			X
Fire escapes, open and enclosed or fire towers, not encroaching more than 5 feet, except 3.5 feet into a required interior side yard	X	X	X
Firewood storage 5 feet from property line			X
Garages or carports, detached			X
Gates, driveway (as regulated in Title 13)	X	X	
Growing of garden crops in the open		X	X
Exterior equipment (i.e. HVAC, generators, pool equipment, etc.)~~HVAC equipment including air conditioning units~~, not less than 12 feet from designated lot lines, subject to screening requirements of Title 18		X	X
Lawn furniture, such garden structures as benches, sundials, ~~birdbaths, and fountains~~.	X	X	X
Open off street loading spaces			X
Open off street parking spaces, may be permitted in a required yard adjoining a street, as regulated in this title		X	X
Ornamental light standards	X	X	X
~~Terraces, p~~Patios, outdoor kitchens, and outdoor fireplaces			X
Playground and laundry drying equipment			X
Pool heaters, not less than 12 feet from designated lot lines, subject to screening requirements of Title 13.		X	X
Pool House (Accessory building)			X
Residential Awnings or canopies, projecting not more than 3 feet into the required yards	X	X	X

Sheds and storage structures for garden equipment and household items			X
Signs and nameplates	X	X	X
Solar panels (photovoltaic or thermal collectors) not less than 12 feet from designated lot lines.			X
Steps and/ or required egress ramps, open	X	X	X
Swimming pools			X
Tennis courts, sports courts			X
~~Trees, shrubs and other plants, except: on corner lots where no such material shall be permitted to obstruct a clear path of motorists' vision of approaching vehicles within the area enclosed by any 2 intersecting curb lines or edges of pavement, as extended to their point of intersection if necessary, whichever is applicable, and a straight line connecting those 2 lines at points 60 feet from their point of intersection~~ ~~1) Where such plants obstruct Intersection Sight Distance as required by Bureau of Local Roads and Streets Manual, Chapter 28~~ ~~And/or~~ ~~2) As required by 425 ILCS 20 No object shall be constructed, maintained or installed within 48 inches of a fire hydrant. It shall be unlawful to install, maintain, construct or enlarge any barriers, trees, bushes, walls, or other obstacles which may hide or impede the use of a fire hydrant.~~	~~X~~	~~X~~	~~X~~
Trellises-Only allowed within the buildable area of the lot			
Water features/fountains	X		X
Wind energy systems- ground mounted in business and office districts only		X	X

(Ord. G-678, 6-26-2001; Ord. G-712, 1-14-2003; Ord. G-728, 8-12-2003; Ord. G-740, 2-10-2004; Ord. G-1021, 3-11-2014; Ord. G-1227, 1-24-2023)

13-3-7 : TRAILERS, BOATS AND HABITABLE VEHICLES:

A. Trailers and vehicles shall not be permitted in any district as principal or accessory structures on a lot.

B. Outdoor storage in residential districts of h~~H~~abitable vehicles, utility trailers, horse trailers, boats on boat trailers or blocks, and other trailers shall ~~not be parked or stored in any required yard or in the open on any lot, except when permitted in this title, or in the operations of a lawfully established trailer or, habitable vehicle sales or manufacturing establishment~~
comply with the regulations in Chapter 6, Section 13-6-3, Regulations Applicable to All Residence Districts; provided no major repair, disassembly, or rebuilding operations are conducted thereon; and provided that no habitable vehicle so stored may be occupied.

C. Outdoor storage in commercial districts of ~~One~~ habitable vehicles, ~~and one~~ utility trailers, horse trailers, ~~or one~~ boats on a boat trailer or blocks, or one other trailers, ~~owned by the occupant of the dwelling, may be stored or parked only to the rear of said dwelling and not within any required side yard or rear yard of a lot containing a single-family detached dwelling; provided no major repair, disassembly, or rebuilding operations are~~ conducted thereon; and provided that no habitable vehicle so stored may be occupied shall not be parked or stored in any required yard or in the open on any lot, except when permitted in this title, or in the operations of a lawfully established trailer or, habitable vehicle sales or manufacturing establishment.

~~D. A habitable vehicle may be parked or stored in the driveway on property within the zoning jurisdiction of the village for a period of three (3) consecutive days without permit, and may be occupied during such period. Thereafter such a vehicle may be parked only after issuance of a permit by the director of community development permitting such parking. Such a permit may be issued by the director for the following purposes if the proposed use is consistent with the purposes of this title:~~

D. ~~1. For p~~Parking of habitable vehicles for use as temporary office or storage space incidental to and only for the period of time of construction of a building or series of buildings, provided such habitable vehicles are located on the same lot or contiguous lots to the building or series of buildings.

E. ~~2. For p~~Parking and occupancy of a vehicle on a lot containing a dwelling for a period not to exceed ten (10) days in any consecutive thirty (30) day period shall be permitted, ~~and~~ only if the location of said habitable vehicle on such lot does not violate the provisions of this title in relation to the placement of structures on such lot. ~~except that s~~Such temporary parking shall be permitted on existing driveways notwithstanding that said driveway may be in a side yard. (Ord. G-678, 6-26-2001)

13-3-8 : STRUCTURE HEIGHT:

A. No structure shall be erected, converted, expanded, reconstructed or structurally altered to exceed the height limit measured above the natural ground level, as determined by the village engineer, for the district in which the structure is located. However, this height limit for skylights, steeples, flagpoles, chimneys, radio and television aerials, wireless masts, or electric and telephone service poles anywhere in the village; and mechanical rooms, penthouses or roof structures for the housing of elevators, stairways,

tanks, ventilating fans or similar equipment, towers, water tanks, or elevators or other appurtenances anywhere in the village except residential districts, shall be thirty feet (30') above the height limits of the district in which they are located and shall be for ornamental purposes only and shall in no event be occupied. Structure height may be measured from a base elevation other than natural ground level only with the express approval of the village. However, an elevator housing enclosure for the purpose of providing a single elevator access to the penthouse level not to exceed three hundred twenty five (325) square feet in area may be erected to heights which do not exceed by more than twenty two feet (22') the height limits of the district in which it is located.

B. The height of single-family homes will be measured to the peak of the roof using one of the following methods:

1. In engineered subdivisions, as determined by the village engineer, the height will be measured using the recommended top of foundation elevation that is part of the approved grading plan;

2. In all other situations, the village engineer shall determine an elevation, from which the height will be measured, based on the existing grades and grades of adjacent properties;

3. For lots improved with an existing single-family home, the existing top of foundation elevation can be maintained and will be used as the base to measure the height of the structure.

C. The height limit, as it pertains to all other structures, shall not exceed the height limit above natural ground level established for the district in which the structure is located. (Ord. G-678, 6-26-2001; Ord. G-730, 9-23-2003; Ord. G-733, 11-11-2003; Ord. G-778, 4-26-2005)

13-3-9 : PUBLIC UTILITIES:

The following public utility uses are permitted in any district: wires, cables, conduit, vaults, laterals, pipes, mains and valves, public warning devices, microcells or other similar transmission and distributing equipment (not including cellular telephone towers and ancillary equipment), provided that the installation and location thereof shall conform with the rules and regulations of applicable administrative authorities and ordinances of the village (See Title 6). ~~Microcells shall include a wireless communication facility consisting of an antenna that is either: a) four feet (4') in height and with an area of not more than five hundred eighty (580) square inches, or b) if a tubular antenna, no more than four inches (4") in diameter and no more than six feet (6') in length in the associated equipment cabinet that is six feet (6') or less in height and no more than forty eight (48) square feet in floor area. (Ord. G-678, 6-26-2001)~~

13-3-10 : PERFORMANCE STANDARDS:

~~Any use established in any zoning district shall be operated so as to comply with the performance standard regulations prescribed in subsection A of this section.~~

The performance standards set forth in this Section are designed to protect the health, safety, and welfare of the residents of the Village of Oak Brook and to protect, maintain, and enhance the quality of the man-made and natural environments of the Village. All new and existing uses established within the Village shall comply with the performance standards set forth in this Article, unless any federal, state, county or local ordinance, law or regulations established are more restrictive, in which event the more restrictive standard shall apply. Uses already established on the effective date of this ordinance shall be allowed to be altered, enlarged, expanded, or modified, provided that any such additions or changes comply with the performance standards set forth in this Section.

A. Noise:

1. Sound Levels: Sounds levels shall be measured with a sound level meter manufactured according to standards prescribed by the American National Standards Institute (ANSI). Measurements shall be made using a digital decibel meter. Impulse type noises shall be subject to the performance standards prescribed in this subsection A, provided that such noises shall be capable of being accurately measured. Noises incapable of being so measured, such as those of an irregular and intermittent nature, shall be controlled so as not to become a nuisance to adjacent uses. At any point on or beyond the boundary line of the district designated below, the sound pressure level of any operation or plant (other than background noises produced by sources not under control of this subsection A, such as the operation of motor vehicles or other transportation facilities) shall not exceed the decibel limits in the table below:

SOUND/NOISE LEVEL TABLE

	Maximum Permitted Decibel (dBA) Levels		
Time Of Day	Residential	Commercial	Industrial
Between 7:00 A.M. and 7:00 P.M.	65 dBA	70 dBA	70 dBA
Between 7:00 P.M. and 7:00 A.M.	55 dBA	60 dBA	65 dBA

2. General Requirements:

a. Sound Measurement Setback Requirement: All sound measurement readings must be set up not less than twenty five feet (25') (7.6 meters) from the property line noise

source. The twenty five foot (25') (7.6 meter) setback requirement is from the noise source and not the property line unless the noise source is contiguous to the property line.

b. Exempt Activities: Activities exempt from these provisions include the operation of motor vehicles or other transportation facilities; snow removal equipment; church bells/chimes; residential air conditioning units (installed and operating in accordance to manufacturer's specifications).

c. Unnecessary Noise Standards: The following activities are declared to be loud, disturbing and unnecessary noises in violation of this subsection A:

(1) Horns And Signaling Devices: The sounding of any horn or signaling device on any automobile or other motor vehicle on any street or public place of the village except as a danger warning.

(2) Animals Or Birds: The keeping of any animal or bird which, by causing frequent or continued noise, shall disturb the comfort or repose of any persons in the vicinity.

(3) Exhausts: The discharge into the open air of the exhaust of any engine, stationary combustion machine, generator, motorboat or motor vehicle except through a muffler or other device, which will effectively prevent loud noises therefrom. The use of emergency generators and other backup power sources would not apply to reasonable use during an emergency situation or during testing.

(4) Loading: The creation of loud and excessive noise in connection with the loading or unloading of any vehicles.

d. Additional Requirements; Lawn Mowing/Maintenance: It shall be unlawful to cause or make loud noise through the operation of lawn maintenance equipment including, but not limited to, lawn mowers, lawn blowers and tractors before seven o'clock (7:00) A.M. and after dusk on any day during the week. This restriction shall not apply to golf course, park district or forest preserve maintenance operations.

B. Other Performance Standards: Any use established in the various residence and business districts shall be operated so as to comply with the performance standard regulations set forth in section 13-10-3 of this title. (Ord. G-678, 6-26-2001; Ord. G-863, 7-22-2008)

13-3-11 : MECHANICAL EQUIPMENT TO BE SCREENED:

~~All heating, air conditioning, ventilating, or other mechanical equipment located on the roof of any nonresidential structure in any residential, business or office-research-assembly district shall be screened on all sides or enclosed in such a manner consistent with the design and materials found on the principal building as to mask such equipment. (Ord. G-678, 6-26-2001)~~

All exterior equipment (i.e. HVAC, generators, pool equipment or other mechanical equipment) in all districts shall be screened on all sides or enclosed in such a

manner consistent with the design and materials found on the principal building as to mask such equipment. (See Building code 2801.2)

13-3-12 : ACCESS:

All publicly dedicated rights of way for roadway or highway purposes or any land used, by easement or other means, for vehicular access which may be developed in any zoning district in the village, shall meet all requirements of the subdivision regulations of the village 1 . Where such access may be developed as part of a larger, continuous, regional street system, or where it may serve a subdivision located in part outside the corporate limits of the village, the design of said system shall be reviewed in accordance with the applicable provisions of all governing ordinances and shall be subject to all required public hearings and meetings before the plan commission, zoning board of appeals and village president and board of trustees prior to development. (Ord. G-678, 6-26-2001)

~~Notes~~

~~1 1. See title 14 of this code.~~

13-3-13 : PROPERTY ABUTTING OR ADJOINING CONSERVATION/RECREATION DISTRICT:

All provisions in this title, as amended, which pertain to property abutting or adjoining a residence district shall be equally applicable to property abutting or adjoining any property zoned CR conservation/recreation district. (Ord. G-678, 6-26-2001)

13-3-14 : DRIVEWAY GATES:

Driveway gates are permitted as accessory structures in required front yards, or side yards adjoining a street; provided that they conform with the following criteria:

A. Required Acreage: No driveway gate may be installed on a lot of less than two (2) acres, unless the front yard of said lot abuts a thoroughfare 1 . Any driveway gate previously approved and constructed in accordance with applicable law at that time shall be treated as a permitted and legally conforming use.

B. Direction Of Swing: Driveway gates shall not swing outward from the property.

C. Width: The minimum width for a gate structure shall be twelve feet (12') for opening the gate. All driveway gates shall be greater than fifty percent (50%) open in design when viewed from a ninety degree (90°) angle, except that this required open space in louver type gates may be viewed from any angle, and excluding metal gates with more than seventy five percent (75%) of its surface area open space.

D. Location Of Gates: Gates shall be located a minimum distance of twenty feet (20')

from the nearest edge of pavement on local residential streets and thirty feet (30') from the nearest edge of pavement on all other streets including all thoroughfares and collectors (reference the Oak Brook transportation plan phase II report dated January 1971), to allow adequate room for vehicular access to the property. (Ord. G-678, 6-26-2001; Ord. G-741, 2-10-2004)

~~Notes~~

~~1 2. See section 14-2-2 of this code.~~

13-3-15 : PERMANENT ENTRYWAY CANOPIES:

Permanent entryway canopies to provide weather protection for persons being dropped off or picked up may be erected in required front and corner lot side yards for churches and hotel, restaurant and office use buildings permitted by this title, subject to the following conditions:

A. The required yard must be one hundred feet (100') or more in depth;

B. The area of the encroachment is limited to a maximum of six hundred (600) square feet;

C. The maximum depth of the encroachment into the required yard is thirty feet (30');

D. The minimum clearance for a canopy above a driveway or parking area shall be not less than fourteen and one-half feet (14.5'); and

E. The maximum height of the canopy is eighteen feet (18'). (Ord. G-678, 6-26-2001)

13-3-16 : PORTABLE STORAGE UNITS:

A. For purposes of this section, a "portable storage unit" is defined as an enclosed container that is delivered to a private property and is normally used for the short term storage of items and materials associated with a move into or from the principal use of the property.

B. The following regulations shall apply to portable storage units:

1. No more than two (2) portable storage units shall be permitted on a property.

2. Stacking of portable storage units is prohibited.

3. Any property where a portable storage unit is located must be occupied by a principal use or dwelling.

4. No portable storage unit may remain on a property for more than fifteen (15) consecutive days. An additional fifteen (15) day period may be approved by the ~~department of community d~~Development Services department for cause. Special circumstances

allowing for longer periods of time may be determined by the ~~d~~Director of ~~community d~~Development Services.

5. A portable storage unit on residential property shall not exceed sixteen feet (16') in length. A portable storage unit on nonresidential property shall not exceed forty feet (40') in length.

6. Portable storage units shall be placed on the driveway or other paved surface on the property.

7. The portable storage unit shall not be located closer than ten feet (10') from the principal structure on the property.

8. The portable storage unit shall not be used to store hazardous materials or flammable liquids.

9. Portable storage units shall not be placed on public property or permitted to obstruct traffic visibility.

10. A permit and fee (an amount, if any, to be determined by the village board from time to time) shall be required prior to the placement of a portable storage unit.

11. Portable storage units shall be maintained in good repair, free from rust, peeling paint, graffiti and other forms of deterioration.

12. Signage on portable storage units is limited to the name and address of the storage unit rental company.

13. Portable storage units shall be locked when not being loaded or unloaded. (Ord. G-861, 6-10-2008)

13-3-17 : FENCE REGULATIONS:

A. For purposes of this section, the following terms shall have the following meanings:

DOG RUNS/KENNELS: Enclosures constructed for the purpose of containing dog(s) outside of the principal structure on a property. Not to exceed 5% of the area of the principal structure.

FENCE: A structure used to delineate a boundary, or as a barrier, or as a means of confinement or for confinement.

FENCE HEIGHT: Measured from the top of the fence to pre-existing grade, irrespective of whether the fence has decorative caps and posts, as long as the caps and posts are no higher than four (4") inches. Fences built on retaining walls shall be measured from the existing elevation (as approved by the Village Engineer), prior to construction of a retaining wall, to the top of the fence.

FENCE TYPE STRUCTURE: Any fence, or part thereof, located in the buildable area of a property and not located in any required yard. "Fence type structures" include solid privacy

screens and open patio enclosures. A "fence type structure" shall not include any part of a fence located outside of the buildable area of a property.

B. The following regulations shall apply to all fences other than fence type structures:

1. Fences shall have a minimum of fifty percent (50%) of the fence's surface area in open space as viewed from an angle of ninety degrees (90°) from the fence line. A fence's surface area shall include the surface area of any gates attached to the fence, but shall not include the surface area attributable to any supporting piers or pillars.

2. Solid fences shall be a maximum height of twenty four inches (24") and be constructed of wood, stone, brick or other masonry material. All nonsolid fences shall be a maximum height of forty two inches (42") and shall be constructed of wood, stone, brick, wrought iron, aluminum or synthetic materials that are molded and give the appearance of wood, stone, brick or wrought iron.

3. If a fence only has one finished side, the fence's finished side must face to the outside of the property. The finished side is the side that does not include the structural supports.

4. Fences shall be constructed at the pre-exiting grade or at a grade approved of by the village engineer. Fences shall not block or obstruct natural drainage or water flow. A fence that is installed in the floodplain shall be elevated a minimum of three inches (3") above the Village engineer approved grade and also be a minimum of fifty percent (50%) open.

5. Fences shall not be permitted in a front yard or alternate front yard setback (see diagrams), except when constructed with driveway gates as permitted in Section 13-3-14 of this Code.

6. All fences shall be located completely within the property that the fence is serving. No fence shall be constructed in a manner that encroaches upon another property or a village owned right of way without the prior approval of the village.

7. All fences shall be constructed and maintained in a manner that preserves the fence's structural integrity and original appearance.

8. Electrified fences, barbed wire, razor wire, spears and other sharp or hazardous materials are not permitted in the village, with the exception of those materials approved by the Development Services department for horse stables and other animal enclosures.

9. No fence shall be constructed or erected in a manner or in a location that interferes or obstructs the line of sight of vehicles using an intersection of an alley and street, or an intersection of two (2) streets.

10. All fences shall comply with all applicable village code requirements.

C. The following regulations shall apply to all fence type structures:

1. Fence type structures may screen hot tubs, patios, decks, sitting areas, or other similar types of uses.

2. Fence type structures may not exceed six feet (6') in height.

3. Fence type structures may not privatize the buildable area.

4. Fence type structures are not permitted in any required yard.

5. All fence type structures shall comply with all applicable village code requirements.

6. All fence type structures are subject to the review and approval of the Development Services department prior to their construction or erection to ensure that the requirements of this section are met.

D. Swimming Pool Fencing. Notwithstanding anything to the contrary contained in this section, the regulations applicable to fences surrounding any swimming pool or any other water feature that requires fencing pursuant to this code or state law shall be as follows:

1. Be a minimum of forty eight inches (48") in height;

2. Not exceed sixty inches (60") in height;

3. The location of a forty eight inch (48") to sixty inch (60") fence that surrounds a swimming pool shall only be in the rear yard or required rear yard setback of the lot. The fence shall also be located in the rear yard behind the principal use structure.

4. Comply with all other applicable requirements of this code. In addition, no fence surrounding a swimming pool may be made of chainlink or wire materials.

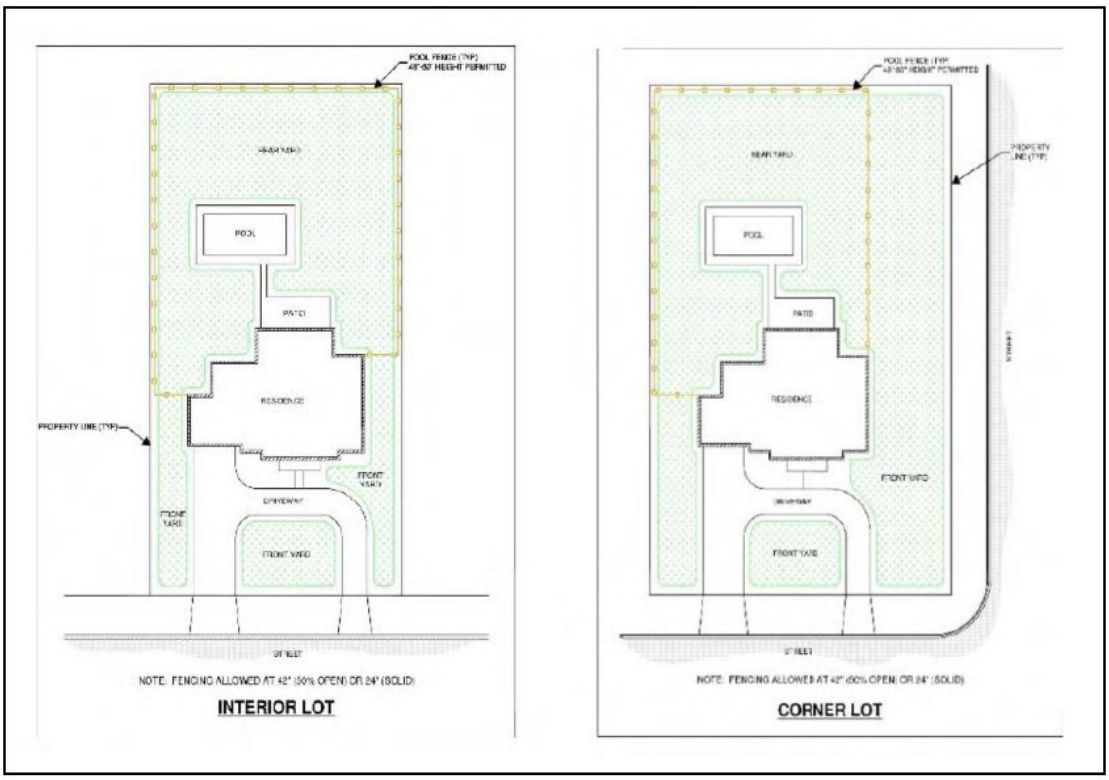

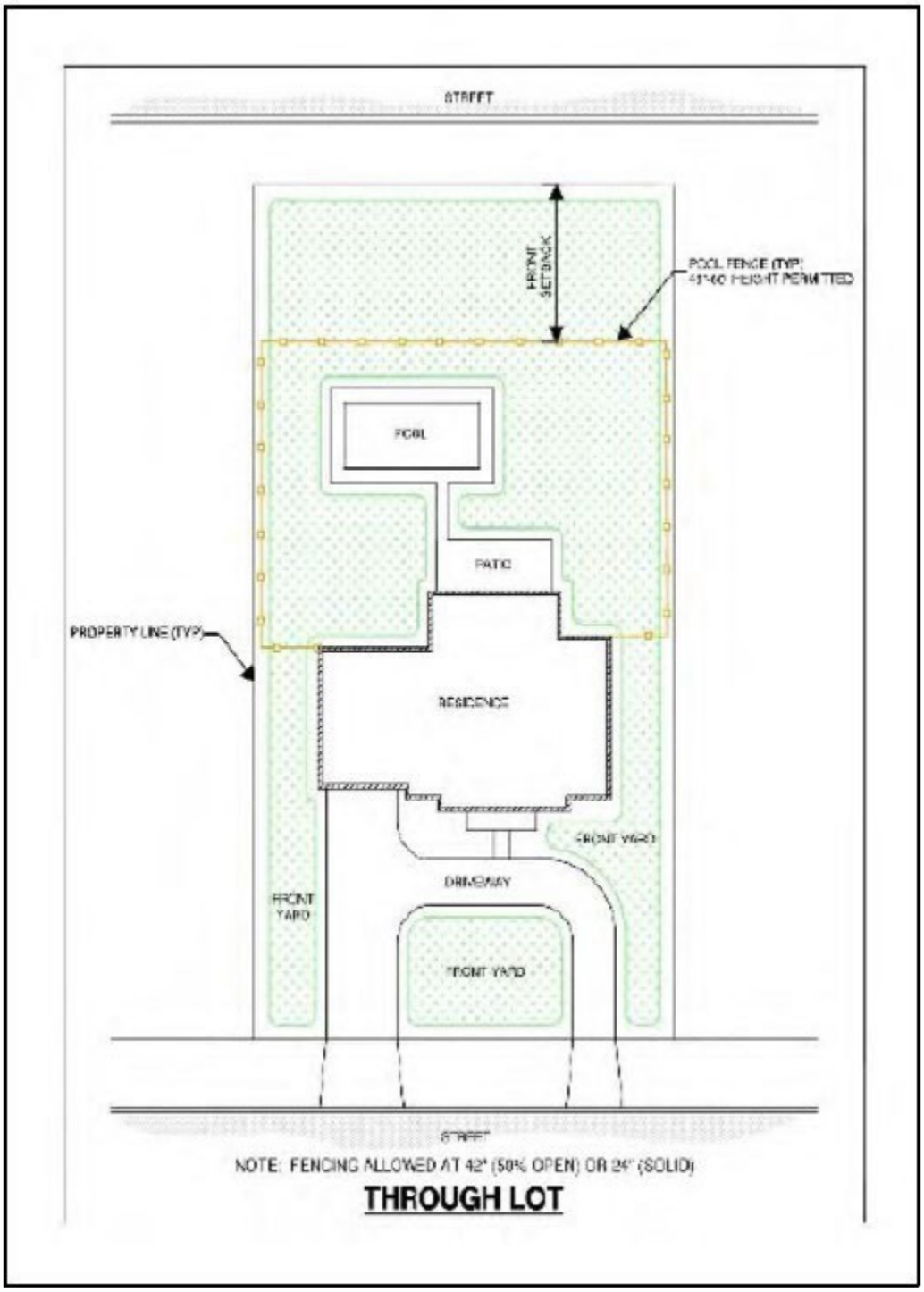

E. The following requirements shall apply to chainlink or wire fencing:

1. Chainlink or wire fencing shall be:

   a. Made of at least 9-gauge wire and not of a thinner gauge wire;

   b. Constructed with a top member or brace with a knuckle design;

c. Installed with the wire material (finished side) facing the neighboring property;

d. Painted or coated in a dark color (e.g., black, brown or dark green); and

e. Landscaped with year-round plantings, bushes/vegetation or trees on both sides of the fence, except for dog runs/kennels, which shall be so landscaped on the outside of the fence; all required vegetation will be reasonably maintained or replaced as needed.

2. No chainlink or wire fencing shall include slats.

3. No chainlink or wire fencing shall be used for a dog run/kennel in any required yard. Chainlink or wire fencing may be used for dog runs/kennels that are constructed or erected in the buildable area of a property only behind the principal use structure.

4. Chainlink or wire fencing shall not be permitted:

a. In buildable areas. This restriction shall not apply to dog runs/kennels.

b. In any front or side yard.

c. In any rear yard unless the rear yard abuts the village's boundary. Notwithstanding anything to the contrary contained in this section, any such chainlink or wire fencing in a rear yard abutting the village's boundary shall not exceed a height of six feet (6').

d. Surrounding subdivisions unless: 1) landscape screening is installed and maintained in a manner that provides year round vegetation on both sides of the fence; and 2) the fence is approved by the village.

e. Around swimming pools.

f. Around sports courts/fields. This restriction shall not apply to fencing around sports courts for tennis, basketball, hockey and fields for baseball provided that: 1) the fence does not exceed ten feet (10') in height; 2) the court/field shall not be located in any required front or side yard; and 3) the fence must be constructed to the applicable ASTM standard.

5. Chainlink and wire fencing is permitted around construction sites only as a temporary use. The required height of construction fencing shall be established as part of the building permit approval process.

6. Chainlink and wire fencing shall be permitted along state and federal roadways.

7. In the event that a yard is enclosed with a chainlink fence that was installed prior to August 12, 2003, and one side of the fence enclosure is on a neighbor's property and the neighbor removes the chainlink fence, the owner may continue to enclose his/her yard with a chainlink fence by constructing a new fence on his/her property to replace the fence removed by the neighbor.

F. Fences and barriers along major arterials: If a formal barrier or sound wall system is not in place, a solid fence/wall structure may only be erected as follows:

1. The solid fence/wall structure is located along one of the following: Roosevelt Road, 22nd Street, Illinois Route 83/Kingery Highway, Interstate Highway I-88, or Interstate Highway I-294; and

2. The solid fence/wall structure is a single unified system that is approved by all affected property owners, the subdivision homeowners' association (if applicable) and the village of Oak Brook.

3. A solid fence/wall structure shall be considered a six foot (6') high board on board wood fence consisting of a natural wood finish unless otherwise determined by the subdivision homeowners' association.

G. Residential Subdivision Fences: Residential subdivisions are unique and vary in lot sizes, geography and adopted private codes, covenants and restrictions (CCR's). For these reasons, the following homeowners associations have fence code overlays that apply specifically to their subdivision.

1. Timber Trails - Merry Lane Subdivision.

a. The maximum fence height shall not exceed five feet (5') in the rear yard and required rear yard setback. Five foot (5') high fences shall be located behind the rear facade of the single-family residence.

b. A five foot (5') high fence shall not be permitted in an alternate front yard or alternate front yard setback.

c. A five foot (5') high fence shall be nonsolid and at least 50% open. Nonsolid fences shall be constructed of wood, stone, brick, wrought iron, aluminum or another synthetic material that is molded and gives the appearance of wood, stone, brick or wrought iron.

H. Commercial Fencing:

1. Trash receptacles, dumpsters and service areas shall be screened by a six foot (6') high wall to match the color and material of the principal use building and include metal gates, oriented whenever possible, to not be visible from nearby streets, sidewalks and customer views.

2. Mechanical equipment and generators shall be screened through the use of building design features such as wing walls or approved landscaping, minimizing the need for opaque fencing. If fencing is approved, it shall match the color and material of the principal use building.

I. Governmental Service Facilities and Public Utilities Fencing (excluding properties in the CR District):

1. Security fencing shall not exceed eight foot (8') in height.

2. Barbed wire and similar material are prohibited, except where deemed necessary and appropriate for Homeland Security purposes by the Chief of Police and the Development Services Director. (Ord. G-1021, 3-11-2014; Ord. G-1214, 6-14-2022)

13-3-18 : CANNABIS BUSINESS ESTABLISHMENTSPROHIBITED:

I. For purposes of this section, the following terms shall have the following meanings:

ADULT-USE CANNABIS BUSINESS ESTABLISHMENT:	A cultivation center, craft grower, processing organization, infuser organization, dispensing organization or transporting organization.
ADULT-USE CANNABIS CRAFT GROWER:	A facility operated by an organization or business that is licensed by the Illinois Department of Agriculture to cultivate, dry, cure and package cannabis and perform other necessary activities to make cannabis available for sale at a dispensing organization or use at a processing organization, per the Cannabis Regulation and Tax Act, (P.A. 101-0027), as it may be amended from time-to-time, and regulations promulgated thereunder.
ADULT-USE CANNABIS CULTIVATION CENTER:	A facility operated by an organization or business that is licensed by the Illinois Department of Agriculture to cultivate, process, transport and perform necessary activities to provide cannabis and cannabis-infused products to licensed cannabis business establishments, per the Cannabis Regulation and Tax Act, (P.A.101-0027), as it may be amended from time-to-time, and regulations promulgated thereunder.

ADULT-USE CANNABIS DISPENSING ORGANIZATION:	A facility operated by an organization or business that is licensed by the Illinois Department of Financial and Professional Regulation to acquire cannabis from licensed cannabis business establishments for the purpose of selling and dispensing cannabis, cannabis-infused products, cannabis seeds, paraphernalia or related supplies to purchasers or to qualified registered medical cannabis patients and caregivers, per the Cannabis Regulation and Tax Act, (P.A.101-0027), as it may be amended from time-to-time, and regulations promulgated thereunder.
ADULT-USE CANNABIS EVENT:	Any public or private event operated by an organization or business where attendees can consume cannabis or cannabis products as part of any special event.
ADULT-USE CANNABIS INFUSER ORGANIZATION OR INFUSER:	A facility operated by an organization or business that is licensed by the Illinois Department of Agriculture to directly incorporate cannabis or cannabis concentrate into a product formulation to produce a cannabis-infused product, per the Cannabis Regulation and Tax Act, (P.A.101-0027), as it may be amended from time-to-time, and regulations promulgated thereunder.
ADULT-USE CANNABIS LOUNGE:	A facility operated by an organization or business where customers can consume cannabis in a social setting.
ADULT-USE CANNABIS PROCESSING ORGANIZATION OR PROCESSOR:	A facility operated by an organization or business that is licensed by the Illinois Department of Agriculture to either extract constituent chemicals or compounds to produce cannabis concentrate or incorporate cannabis or cannabis concentrate into a product formulation to produce a cannabis product, per the Cannabis Regulation and Tax Act, (P.A.101-0027), as it may be amended from time-to-time, and regulations promulgated thereunder.
ADULT-USE CANNABIS TRANSPORTING ORGANIZATION OR TRANSPORTER:	An organization or business that is licensed by the Illinois Department of Agriculture to transport cannabis on behalf of a cannabis business establishment or a community college licensed under the Community College Cannabis Vocational Training Pilot Program, per the Cannabis Regulation and Tax Act, (P.A.101-0027), as it may be amended from time-to-time, and regulations promulgated thereunder.

PERSON:	Any person, firm, corporation, association, club, society or other organization, including any owner, manager, proprietor, employee, volunteer or agent.

J. Cannabis Business Establishments Prohibited: The following adult-use cannabis business establishments are prohibited in the Village of Oak Brook. No person shall locate, operate, own, suffer, allow to be operated or aide, abet or assist in the operation within the Village of Oak Brook of any of the following:

Adult-Use Cannabis Craft Grower;

Adult-Use Cannabis Cultivation Center;

Adult-Use Cannabis Dispensing Organization;

Adult-Use Cannabis Event;

Adult-Use Cannabis Infuser Organization or Infuser;

Adult-Use Cannabis Lounge;

Adult-Use Cannabis Processing Organization or Processor; or

Adult-Use Cannabis Transportation Organization or Transporter.

K. Public Nuisance Declared: Operation of any prohibited cannabis business establishment within the Village of Oak Brook in violation of the provisions of this chapter is hereby declared a public nuisance and shall be abated pursuant to all available remedies.

L. Violations: Violations of this chapter may be enforced in accordance with the provisions of Chapter 14 of this code. (Ord. G-1154, 11-12-2019)

CHAPTER 5
CR CONSERVATION/RECREATION DISTRICT

SECTION:

13-5-1 : Purpose

13-5-2 : Permitted Uses

13-5-3 : Special Uses

13-5-4 : Lot Area Requirements

13-5-5: Additional Regulations

13-5-1 : PURPOSE:

The CR Conservation/Recreation District is designed to encourage the development of land for open space recreational activities and/or preserve natural resources. This District is characterized by open uses of land, for example, golf courses and agricultural uses. The only structures and improvements permitted are those which supplement and are incidental to the principal open use. This District is not intended to encourage commercial or residential operations. (Ord. G-60, 3-22-1966)

13-5-2 : PERMITTED USES:

Agricultural, including incidental agricultural structures.

Forest preserves, wildlife reservations, ecological sanctuaries and arboretums.

Golf courses, and similar open field recreational activities.

Parks and playgrounds.

Accessory uses and structures, incidental to and on the same zoning lot as a principal uses. (Ord. G-60, 3-22-1966; Ord. G-483, 3-10-1992)

13-5-3 : SPECIAL USES:

Cultural facilities, including libraries, museums, and similar cultural institutions.

Educational facilities.

Gardens, botanical and zoological.

Governmental service facilities, including municipal civic centers, police and fire stations, village owned communication towers, and similar uses.

Historic facilities available to the public and used primarily for educational, cultural and/or historic purposes and activities in furtherance of the maintenance and support of the historic facilities as set forth in the applicable special use ordinance.

Public warning devices.

Tennis and swimming clubs.

Winter sports: ice skating rinks, ice hockey, curling, skiing or tobogganing, not less than twenty five (25) acres.

Accessory uses and buildings incidental to and on the same lot as the principal use. (Ord. G-60, 3-22-1966; Ord. G-483, 3-10-1992; Ord. G-566, 2-13-1996; Ord. G-608, 3-10-1998)

13-5-4 : LOT AREA REQUIREMENTS:

A. Lot Area: Not less than five (5) acres.

B. Lot Width: Not less than two hundred twenty feet (220') within the buildable area.

C. Floor Area Ratio: Not to exceed 0.15.

D. Structure Height: Not more than thirty feet (30'). Special uses may not exceed forty feet (40').

E. Yards: Yards shall be provided as follows:

1. All yards shall be established according to the following requirements. No structure shall be erected or maintained:

a. Within one hundred feet (100') from the center thread of any waterway or watercourse;

b. Within one hundred feet (100') from the right-of-way line of any street; or

c. Within one hundred feet (100') from any adjacent residence district.

2. Notwithstanding the above, public utilities such as wires, cables, conduits, vaults, laterals, pipes, mains and valves and other similar transmission distributing equipment, bridges, fountains, sidewalks, gateways, flagpoles, roadways, and other similar structures intended to be accessory and incidental to the primary use of a principal building on the lot shall be permitted without regard to the setbacks established herein. (Ord. G-60, 3-22-1966; Ord. G-341, 1-24-1984)

13-5-5 : ADDITIONAL REGULATIONS:

A. Off-Street Parking And Loading: Off-street parking and off-street loading shall be as set forth in Chapter 12 of this Title.

B. Performance Standards: Any use established in a conservation/recreation district shall be operated in compliance with the performance standards set forth in Section 13-10-3 of this Title. C. Signs And Awnings: Awnings, marquees and signs may be erected in conformance with the provisions of Section 13-10A-4 of this Title. (Ord. G-60, 3-22-1966; Ord. G-341, 1-24-1984)

CHAPTER 6
RESIDENCE DISTRICTS

SECTION:

13-6-1 : Purpose

13-6-2 : Home Occupations

13-6-3 : Outdoor Storage -Vehicles

13-6-~~3~~4: Nameplates And Signs

13-6-5: Buildings Of Historical, Architectural Or Cultural Significance

13-6-6: Cluster Type Single-Family Detached Dwellings

13-6-7: Area, Bulk, Density And Setback Requirements

13-6-8: Short-Term Residential Rental

13-6-1: PURPOSE:

The residence districts provide for the development of various types of dwelling units within a framework of standards designed to:

A. Preserve and further promote low density single-family detached dwelling neighborhoods consistent with the predominant character of the village (R1-R2).

B. Encourage the development of medium density single-family detached dwelling neighborhoods where it is possible to provide public streets and utilities (R3-R4). ~~employ modern, efficient land planning techniques with smaller networks of utilities and pavements.~~

C. Provide housing options including attached residential units through the application of various lot sizes, dwelling types, and density (R5).

~~C~~D. Provide for the economically sound and aesthetically pleasing use of areas characterized by their proximity to heavy traffic, the regional shopping center and light industry, including the use of town houses and garden type low density multiple-family dwellings. (Ord. G-60, 3-22-1966)

13-6-2: HOME OCCUPATIONS:

In all residence districts, unless otherwise provided in the regulations of this title, any customary home occupation shall be permitted provided:

A. It is conducted entirely within the dwelling and only ~~by members of the family~~ by the occupants, and when such home occupation is incidental and secondary to the

use of the dwelling for dwelling purposes.

B. It is not conducted from a detached or attached accessory structure, requires no internal or external alterations and involves no construction features or use of equipment not customary in a dwelling.~~, and~~ T~~t~~he entrance to the space devoted to such occupation shall be from within the dwelling.

C. ~~and~~ N~~n~~ot more than one-fourth (1/4) of the permitted building coverage of the principal structure or basement shall be ~~the floor area of a story, including also a cellar of the dwelling, is~~ devoted to such home occupation.

D ~~C~~. There is no exterior display or activity that will indicate ~~from the exterior of~~ that the dwelling ~~that it~~ is being used for any use other than a dwelling.

E~~D~~. Stock in trade, including that which is produced on the premises, shall not require receipt or delivery of merchandise, goods or equipment other than by United States letter carrier mail, similar parcel delivery service or by private passenger automobile. ~~(Ord. G-60, 3-22-1966)~~

F. No one may participate in or assist with the conduct or operation of a home occupation except:

a. Individuals who meet the same residence requirements, set forth in Section A. above;
b. A nonresident assistant, subject to the following requirements and limitations:
   i. Participation by the nonresident assistant shall be in a subordinate capacity only, incidental to the conduct of the home occupation as for example, the services of a nurse, receptionist or clerical assistant in the home occupation of a physician;
   ii. The nonresident assistant shall not participate, totally or partially, in the capacity as an additional operator of the home occupation, as an additional practitioner of the professional, craft or occupational service of the operator, or as a partner or professional associate thereof.

G. There shall be no change in the outside appearance of the building or premises or other visible evidence of the conduct of such home occupation.

H. Alterations shall not be made to the interior of the dwelling which would render it undesirable for residential use.
I. No vehicular traffic substantially greater than normal in the adjacent residential area is permitted.
J. Any activity, use, type of materials, or quantity of materials that is illegal or would be classified by the adopted International Building Code as High-Hazard Group H., creates visible or audible interference in radio and television receivers, or causes fluctuations in line voltage outside the dwelling units is prohibited.
K. No permitted home occupation(s) shall interfere with the reasonable use and enjoyment of adjacent residential properties.

13-6-3 : OUTDOOR STORAGE- VEHICLES

For all Residence Districts, the following regulations apply to outdoor storage:

A. The overnight storage of commercial vehicles outside in any building area or required yard is prohibited.
B. The storage of recreational vehicles is permitted as long as the following requirements are met:
   1. Storage of a recreational vehicle may only be located on lots 1 acre or more in size;

   2. The storage area for a recreational vehicle must not be located within the front yard and must not be in front of the façade of the principal building on the lot; and

   3. Screening of the vehicle must be provided. The screening must be a permanent year round screening with either evergreen plantings or a combination of evergreen plantings and permanent fencing or masonry materials as permitted by the Village Code.

13-6-~~3~~4: NAMEPLATES AND SIGNS:

See chapter 11 of this title. (Ord. G-60, 3-22-1966; Ord. G-203, 12-14-1976; Ord. G-510, 6-9-1993; Ord. G-549, 1-24-1995; Ord. G-586, 4-8-1997; Ord. G-695, 3-26-2002)

13-6-~~4~~ 5: BUILDINGS OF HISTORICAL, ARCHITECTURAL OR CULTURAL SIGNIFICANCE:

A. Purpose: The purpose of this special use category is to provide a method of preserving institutional buildings in existence prior to the incorporation of the village which are of historical, architectural or cultural significance for use as residential dwellings.

B. Criteria: In addition to the standards set forth in subsection 13-14-9E of this title, no special use may be granted hereunder unless:

1. The existing building has historical, architectural or cultural significance according to one or more of the following criteria:

a. Its character, interest or value as part of the development, heritage, or cultural characteristics;

b. Its identification with a person or persons who significantly contributed to the development of the community, county, state or country;

c. Its exemplification of the cultural, religious, economic, social, political or historic heritage of the community;

d. Its embodiment of distinguishing characteristics of an architectural style valuable for the study of a period, type, method of construction or use of indigenous materials;

e. Its identification as the work of a master builder, designer or architect whose individual work has influenced the development of the community, County, State or country;

f. Its embodiment of elements of architectural design, detail, materials or draftsmanship which represent a significant architectural innovation;

g. Its unique location or singular physical characteristics representing an established or familiar visual feature of a neighborhood or the community; and

2. The building is suitable for preservation and continued use of conversion as residential dwellings.

C. Findings: In addition to the findings required under subsection 13-14-9E of this Title, no special use may be granted hereunder unless findings are made that:

1. The building in question has historical, architectural or cultural significance according to one or more of the criteria set forth in this Section;

2. The proposed preservation plan does in fact preserve the existing building as a historical, architectural or culturally significant structure;

3. The building is suitable for preservation and continued use or conversion as residential dwellings.

D. Procedure:

1. The applicant shall file concurrently:

a. An application for a special use as herein provided; and

~~b. An application for approval of a proposed preservation plan, which applications shall~~ be processed in the manner prescribed in subsection 13-14-9D of this Title.

2. The proposed preservation plan shall include:

a. Information addressing the criteria set forth in subsection B of this Section;

~~b. Floor plans showing, in detail, existing and proposed uses of all areas of the building;~~

c. A plat of survey of the property involved showing the location of all existing structures and a site plan showing the location of all proposed structures and existing structures to be retained;

d. A statement detailing the nature of any alteration to existing interior or exterior architectural features specifically identifying those features to be preserved and/or restored;

e. A topographical analysis of the site with contour intervals of not more than two feet (2');

f. Information on existing and proposed water mains, sanitary sewers, storm sewers, storm water retention and runoff, stream channels, floodplains and floodways, lakes, ponds or other public improvements;

g. A study of traffic engineers providing information on the impact of the development on public streets and intersections;

h. A plat or map showing the land uses, physical features, and zoning of all adjacent lands within four hundred (400) yards of the property involved;

i. A proposed fire protection plan detailing the description and location of proposed fire protection equipment and automatic sprinkler systems;

j. A set of plans detailing existing and proposed exterior elevations, a list of any items being removed from the exterior of the building, and typical details for existing and proposed windows, doors, bays and balconies.

3. No special use as provided herein may be issued until a preservation plan has been approved as provided herein, provided that such a special use may be approved upon the condition that the final preservation plan, detailing the information required in subsection D2 of this Section and accompanying documents required in subsection D4 of this Section be submitted to and approved by the corporate authorities within a reasonable time as specified in the ordinance approving the special use.

4. The final preservation plan shall be accompanied by:

a. Final plans and specifications for all public improvements reasonably required for implementation of the preservation plan. Such plans and specifications shall comply with all applicable standards of the Village for said public improvements;

b. A draft of all necessary or advisable covenants, easements, preservation restrictions and condominium declarations acceptable in form and substance to the Village.

E. Bulk Standards: The bulk standards established in this Section shall apply except as follows:

1. Structure Height: Structure height of existing buildings shall be established as necessary to preserve and restore such buildings, provided that no existing structure may exceed its existing structure height or elevation.

2. Ground Floor Area Per Dwelling: Not less than nine hundred (900) square feet.

3. Floor Area Per Dwelling: Not less than two thousand four hundred (2,400) square feet.

4. Parking:

a. Two (2) parking spaces for each dwelling unit and reserved for each said dwelling unit; and

b. One parking space for each dwelling unit for visitor and guest parking.

5. Density: No more than three (3.0) dwelling units per acre.

6. Preservation Vista: Not less than one hundred fifty feet (150').

7. Lot Area: Not less than twelve (12) acres. (Ord. G-328, 8-24-1982)

13-6-~~4~~6 : CLUSTER-TYPE SINGLE-FAMILY DETACHED DWELLINGS:

Residential development of cluster-type single-family detached dwellings shall meet the following criteria:

A. Bulk Standards: The bulk standards of this Section shall apply except as follows:

1. Structure Height: Not more than thirty feet (30') above the highest point of the foundation.

2. Density: Not more than two and three-tenths (2.3) dwelling units per acre, provided the total lot area does not exceed twenty two percent (22%) of gross land area.

3. Lot Area: Not less than three thousand seven hundred (3,700) square feet.

B. Lot Width: Not less than fifty three feet (53') as determined at the rear lot line.

C. Yards: Distances between buildings, public or private rights of way and subdivision boundaries, which shall apply in lieu of the zoning yard requirements for the R3 District, shall be not less than:

1. Sixteen feet (16') from the side wall eaves to the side wall eaves;

2. Seventy feet (70') from the rear wall eaves to the rear wall eaves;

3. Twenty feet (20') from the front wall eaves to the right of way or access easement line;

4. Fifteen feet (15') from the side wall eaves to the right of way or access easement line;

5. Fifteen feet (15') from the rear wall eaves to the right of way or access easement line; and

6. Thirty five feet (35') from the rear wall eaves to the subdivision boundary.

Patios, decks, roof overhangs, chimneys and bay windows shall be permitted within an exclusive easement adjoining the front, rear and side lot lines. This easement may also provide utility access, provided that any structures in the easement do not conflict with the needs of any utility.

D. Subdivision Controls: All common areas shall be titled to and maintained by a homeowners' association as open space for joint use by the residents of the subdivision. At least eighty percent (80%) of occupied dwellings within the subdivision shall be occupied by at least one person who is fifty five (55) years of age or older, and all occupants must be eighteen (18) years of age and older, and this restriction shall be included within the covenants, conditions and restrictions recorded with the plat of subdivision. (Ord. G-618, 9-22-1998)

~~13-6-5~~7: AREA, BULK, DENSITY AND SETBACK REQUIREMENTS

1. Principal Building Lot Coverage: The horizontal area measured from the outside of the exterior walls of the ground floor of the principal structure on a lot. Principal Building coverage for single- family dwellings shall include the entire structure connected by roof to the principal building.
2. Lot Coverage includes all improvements, principal structure, and accessory structures (i.e. driveways, patios, pools, sheds, garages, accessory living units, pool houses, and sports courts, etc.).
3. The access driveway for Flag Lots shall not be included for lot area when determining the lot or principal building coverage.

SECTION 13-6-8: SHORT-TERM RESIDENTIAL RENTAL

SHORT-TERM RESIDENTIAL RENTAL: A Residential Structure, as defined herein, offered for rent for a period which does not exceed thirty (30) consecutive days. The term "Short-Term Residential Rental" shall not include hotels.

SHORT-TERM RESIDENTIAL RENTAL PROPERTY OWNER: The individual or entity which has title to the property which is the subject of a Short-Term Residential Rental.

13-6-8A: PURPOSE AND APPLICABILITY:

It is the intent and purpose of this Section (Short-Term Residential Rental) to preserve the character and integrity of residential neighborhoods within the Village by prohibiting Residential Structures from being used for the commercial purpose of providing Short- Term Residential Rentals.

13-6-8B: SHORT-TERM RESIDENTIAL RENTALS PROHIBITED:

1. It shall be unlawful for any person or entity to operate, use, offer for rent or use, or advertise for rent or use, any property within the Village of Oak Brook as a Short-Term Residential Rental.

2. It shall not be considered a Short-Term Residential Rental when the preceding owner of a property maintains possession of a Residential Structure after closing for the sale thereof but leases the property back from the successor owner for a period of time pursuant to a written agreement.

13-6-8C: PUBLIC NUISANCE DECLARED:

Operation of any Short-Term Residential Rental within the Village of Oak Brook in violation of the provisions of this Chapter may be deemed a public nuisance and abated pursuant to all available remedies, including but not limited to injunctive relief. In addition to the penalties provided for herein, the Village of Oak Brook shall be entitled to receive from the Short-Term Residential Rental Owner reimbursement for the cost of the Village's reasonable attorney fees, costs, and expenses incurred by the Village of Oak Brook to abate a Short- Term Residential Rental operating as a public nuisance.

13-6-8D: PENALTIES:

Any Short-Term Residential Rental Owner or other person or entity who violates any of the provisions set forth or referenced in this Chapter, shall be subject to the following penalties:

1. A fine of one thousand dollars ($1,000.00) for a first offense within a 12-month period, and a fine of two thousand five hundred dollars ($2,500.00) for a second or subsequent Offense within a 12-month period.

2. Each day that a violation of this Chapter continues shall be considered a separate and distinct offense and a fine shall be assessed for each day a provision of this Chapter is found to have been violated. Notwithstanding the forgoing, the escalation of fines as set forth above shall not occur until a prior adjudication of a violation against the same individual or entity has been entered.

3. Continued violations of this Chapter are subject to an injunction. See Section 13-14-11

ARTICLE A. R1 SINGLE-FAMILY DETACHED RESIDENCE DISTRICT

SECTION:

13-6A-1: Permitted Uses

13-6A-2: Special Uses

13-6A-3: Lot Area Requirements

13-6A-4: Additional Regulations

13-6 A-1: PERMITTED USES:

Home occupations.

Nameplates and signs.

Parks and playgrounds.

Public schools, parochial school, nonboarding elementary, junior high and high, on lots not less than eight (8) acres in area for an elementary school and not less than twenty five (25) acres in area for a high school.

Single-family detached dwellings.

Accessory uses and structures, subject to the following:

A. Uses and structures customarily accessory to single-family dwellings.

B. Noncommercial pursuit of agriculture: 1) on lots not less than ten (10) acres in area, provided structures and land used for the shelter, feeding, keeping, propagating, culture of poultry and livestock shall not be less than one hundred feet (100') from the nearest lot line, and any other structure or land used in the pursuit of agriculture shall not be less than one hundred feet (100') from the nearest street line, and not less than fifty feet (50') from the

nearest interior and rear lot line; and 2) on lots less than ten (10) acres in area, provided such uses involve only the growing of farm and garden crops and nursery stock and no accessory structures are used exclusively for such uses, except conservatories or greenhouses of the types customarily attached to dwellings.

C. Dwelling units for housing domestic servants or other persons employed on the premises and guest houses.

D. Horse stables, private, on lots not less than two (2) acres in area; provided that no more than two (2) horses are kept, except that one additional horse may be kept for each one acre of additional lot area over two (2), and no structure used for shelter shall be nearer than ninety feet (90') from side and rear lot lines and one hundred fifty feet (150') from front lot lines, or any streets; such stables to be subject to the following standards:

1. The stable must not be detrimental to or endanger public health or safety;

2. The stable must not be injurious to the use and enjoyment of property in its immediate vicinity nor diminish or impair property values in the neighborhood;

3. Adequate utility service and drainage facilities must be provided and approved by the Village Engineer;

4. The storage area for manure must meet the same setback requirements of stable building location;

5. Manure removal must meet the requirements of the Department of Health of DuPage County and must be so scheduled in frequency so as not to be offensive or injurious to public health;

6. A pest control program must be instituted to meet the requirements of the Department of Health of DuPage County.

E. Storage of building materials and equipment and temporary structures for construction purposes, when on the same or adjoining lot as the principal uses and for a period of not to exceed the duration of such construction.

F. Temporary construction and sales offices in subdivisions containing forty (40) acres or more in area, for a period not to exceed ninety (90) days following completion of such construction. (Ord. G-60, 3-22-1966)

13-6 A-2: SPECIAL USES:

Agricultural: Growing of farm and garden crops and nursery stock as a principal use on a lot, provided:

A. The lot area for commercial growing of farm crops, truck garden produce, and nursery stock shall be not less than ten (10) acres in area.

B. The sale of such materials is not conducted from a store, stand or other structure erected or maintained for such purpose.

Cemeteries (subject to compliance with the regulations in chapter 16 of this title): Any existing cemetery and structure shall be deemed to have a special use permit as required by this section, notwithstanding whether these existing cemeteries and structures comply, as of January 22, 2013, with the provisions of chapter 16 of this title. Any expansion, change, or new construction relating to an existing cemetery and structure shall comply with chapter 16 of this title, but any such activity shall not require a new or amended special use permit, or other zoning relief, provided that the activities comply with chapter 16 of this title. Notwithstanding the foregoing, no special use permit granted pursuant to this section, whether for an existing cemetery and structure or for a new cemetery or structure, shall permit a community burial structure to be built in a residence district.

Churches, chapels, temples and synagogues: On lots not less than three hundred feet (300') in width and not less than two (2) acres in area and one additional acre for each two hundred forty (240) seats in the sanctuary over two hundred forty (240) seats. Where churches and parochial schools are on the same land, not less than eight (8) acres in area.

Cultural and recreational facilities: Outdoor and indoor cultural and recreational facilities including, but not limited to, swimming pools, tennis courts, meeting facilities and other similar facilities accessory to and owned in common by the owners of properties within a residential subdivision.

Public utility, transportation, and government facilities: Public utility, transportation, and governmental service facilities, including municipal offices and civic centers, public libraries, police and fire stations, public works facilities, village owned communication towers, conference of municipal governments and ancillary uses (including organizations which provide consultation solely to units of local government), and similar uses.

Recreational and cultural uses: The following recreational and cultural uses, public or private, provided the site meets the minimum area requirements hereinafter stipulated:

A. Golf courses and clubs, standard or par 3, when operated only during daylight hours, but not including commercially operated miniature courses or golf driving ranges, not less than twenty five (25) acres.

Accessory uses: Accessory uses, customarily incidental to the above special uses, including, but not limited to, agricultural, recreational and cultural uses, as follows:

A. Clubhouses and lodges, containing customary facilities incidental to the operation of the principal recreational use including, but not limited to, restaurants, cocktail lounges and shops primarily for the sale and service of equipment and other commodities related to participation in the recreational facilities on the premises on lots not less than two (2) acres in area, and provided further that the restriction relating to operation only during daylight hours does not apply to the accessory uses.

B. Horse stables, kennels and other similar structures, for keeping and shelter of livestock, other animals, poultry and game, and accessory structures, provided that such structures shall be located: 1) not less than one hundred fifty feet (150') from a street; 2) not less than one hundred feet (100') from a structure on the same lot intended for occupancy as a dwelling; 3) not less than one hundred feet (100') from a residence district line; 4) not less than seventy feet (70') from a nonresidence district line; and 5) on lots not less than ten (10) acres in area. (Ord. G-60, 3-22-1966; Ord. G-328, 8-24-1982; Ord. G-483, 3-10-1992; Ord. G-571, 6-11-1996; Ord. G-608, 3-10-1998; Ord. G-675, 3-27-2001; Ord. G-938, 11-9-2010; Ord. G-989, 1-22-2013)

13-6 A-3: LOT AREA REQUIREMENTS:

A. Lot Area: Except as otherwise required in this title for a specific use, not less than two (2) acres.

B. Lot Width: Not less than two hundred twenty feet (220') within the buildable area.

C. Floor Area Ratio: Not to exceed 0.4 ~~for nonresidential uses~~.

D. Maximum Lot Coverage: Not to exceed .375 ~~for nonresidential uses.~~

E. Maximum Lot Coverage (Principal Structures): Not to exceed .20.

F. Structure Height:

1. Residential uses: Not more than fifty feet (50'), except for continuous flat roofs, which shall be not more than thirty five feet (35') to the top of any parapet wall. However, where residential building heights exceed thirty feet (30'), the highest space that can be occupied must have an emergency escape and rescue opening at a maximum elevation of thirty two feet (32') above grade.

2. Nonresidential uses: Not more than forty five feet (45') excluding village owned communication towers, which may not exceed a height of one hundred twenty feet (120').

G. Ground Floor Area Per Dwelling:

3. One story: Not less than two thousand (2,000) square feet.

4. Bilevel: Not less than one thousand eight hundred (1,800) square feet.

5. Dwellings having more than one story: Not less than one thousand five hundred (1,500) square feet.

H. Yards: Except as required in subsections 13-6A-1B and D of this article, under "accessory uses and structures", yards shall be provided as follows:

6. Front: Not less than fifty feet (50') in depth, except front yards abutting York and Cermak Roads shall have a depth of not less than one hundred feet (100').

7. Side: Not less than thirty feet (30') in depth, except: a) a side yard abutting a street shall

be not less than fifty feet (50') in depth, and for nonresidential uses each interior side yard shall be increased by not less than two feet (2') for each one foot (1') of structure height over thirty feet (30').

8. Rear: Not less than one hundred feet (100') in depth. (Ord. G-60, 3-22-1966; Ord. G-616, 8-11-1998; Ord. G-730, 9-23-2003; Ord. G-938, 11-9-2010; Ord. G-977,8-14-2012)

13-6A-4: ADDITIONAL REGULATIONS:

A. Off Street Parking And Loading: Off street parking and loading shall be as provided in chapter 12 of this title. (Ord. G-60, 3-22-1966)

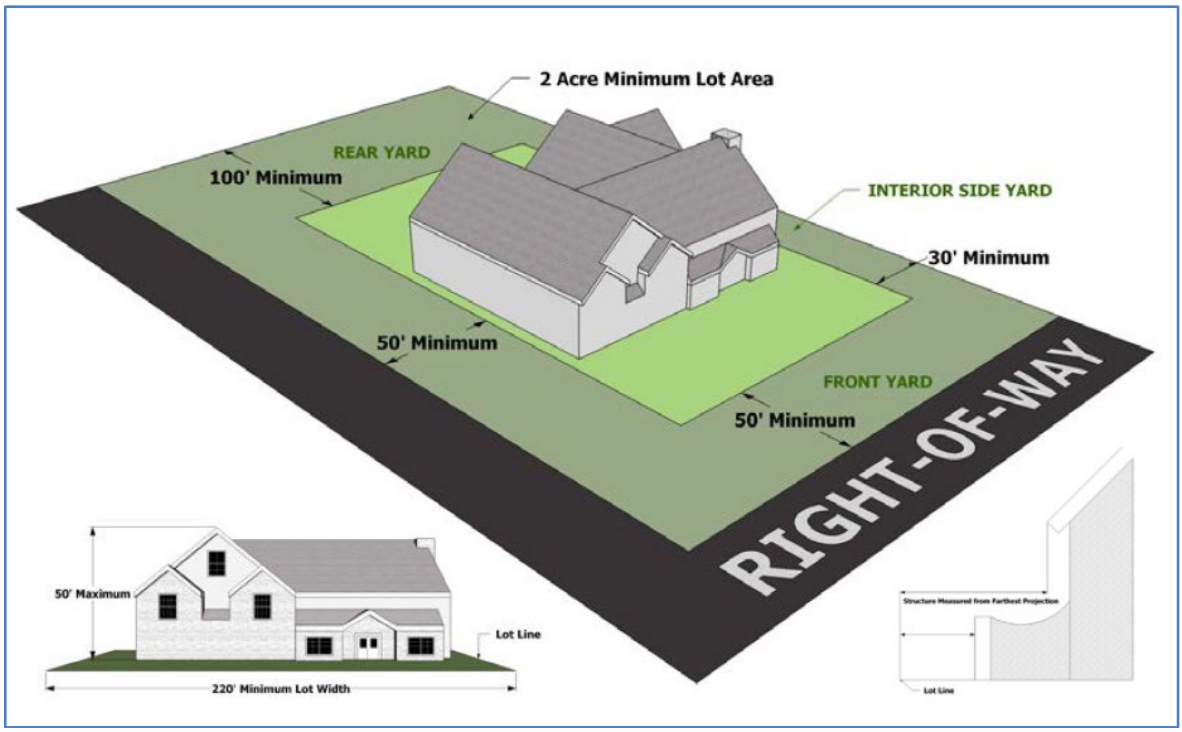

R1 SINGLE-FAMILY DETACHED RESIDENCE DISTRICT		
Standard for:	Residentail Use	Non-Residentail Use
Minimum Lot Area	2 acres	2 acres
Minimum Lot width	220'	220'
Maximum Structure Height[4]	50' or 35'[1]	45'
Maximum Principal Building Lot Coverage	0.20	0.20
Maximum Lot Coverage	0.375	0.375
Maximum FAR	0.4	0.4
Minimum Yard Setbacks		
Front Yard	50' or 100'[2]	50' or 100'[2]
Interior Side Yard	30'	30'[3]
Street Side Yard	50'	50'
Rear Yard	100'	100'
Minimum Ground Floor Area per Dwelling		
Single Story	2,000 sq. ft.	-
Bilevel	1,800 sq. ft.	-
Two or more Stories	1,500 sq. ft.	-

[1] For continious flat roofs.

[2]Front yards abutting York and Cermark Roads

[3]Increased 2' for each 1' of structure height over 30'

[4]Where residential building heights exceed thirty feet (30'), the heighest space that meets the criteria of Sections R304, R305 & R311.4 for habitable space shall have an emergency escape and rescue opening in compliance with Section R310 at a maximum elevation of thirty two feet (32') above grade. This section shall be applied regardless of the usage designation on the construction documents, including "storage" or "bonus" rooms.

See Section 13-3 for additional structure height information.

ARTICLE B. R2 SINGLE-FAMILY DETACHED RESIDENCE DISTRICT

SECTION:

13-6B-1: Permitted Uses

13-6B-2: Special Uses

13-6B-3: Lot Area Requirements

13-6B-4: Additional Regulations

13-6B-1: PERMITTED USES:

Permitted uses shall be those as in the R1 single-family detached residence district. (Ord. G-60, 3-22-1966)

13-6B-2: SPECIAL USES:

Special uses shall be those as in the R1 single-family detached residence district. (Ord. G-608, 3-10-1998)

13-6 B-3: LOT AREA REQUIREMENTS:

A. Lot Area: No less than one acre, except as otherwise required in this title for a specific use.

B. Lot Width: Not less than one hundred fifty feet (150') within the buildable area.

C. Floor Area Ratio: Not to exceed 0.4 ~~for nonresidential use~~.

D. Maximum Lot Coverage: Not to exceed .375 ~~for nonresidential uses~~.

E. Maximum Lot Area Coverage (Principal Structures): Not to exceed .20.

F. Structure Height:

1. Residential Uses: Not more than forty five feet (45') for lots one acre or larger and forty feet (40') for lots less than one acre, except for continuous flat roofs, which shall be not more than thirty five feet (35') to the top of any parapet wall. However, where residential building heights exceed thirty feet (30'), the highest space that can be occupied must have an emergency escape and rescue opening at a maximum elevation of thirty two feet (32') above grade.

2. Institutional And Other Nonresidential Uses: Not more than forty five feet (45').

G. Ground Floor Area Per Dwelling:

3. One Story Without Basement: Not less than one thousand eight hundred (1,800) square

feet.

4. One Story With Basement: Not less than one thousand six hundred (1,600) square feet.

5. Dwellings Having More Than One Story: Not less than one thousand two hundred fifty (1,250) square feet.

G. Yards: Except as required in subsections B and D under "accessory uses and structures" in section 13-6A-1 of this chapter, yards shall be provided as follows:

1. Front: Not less than forty feet (40') in depth.

2. Side: Not less than eighteen feet (18') in depth except:

a. A side yard abutting a street shall not be less than forty feet (40') in depth;

b. To accommodate a side load garage, the minimum side yard setback (on 1 side yard) must be at least twenty three feet (23'); the width of the pavement opposite of the garage door must be a minimum of twenty three feet (23');

c. For nonresidential uses each side yard abutting a street shall be not less than fifty feet (50') in depth and each interior side yard shall be not less than thirty feet (30') in depth and increased by not less than two feet (2') for each one foot (1') of structure height over thirty feet (30').

3. Rear: Not less than sixty feet (60') in depth. (Ord. G-60, 3-22-1966; Ord. G-328, 8-24-1982; Ord. G-616, 8-11-1998; Ord. G-730, 9-23-2003)

13-6 B-4: ADDITIONAL REGULATIONS:

A. Off Street Parking And Loading: Off street parking and loading shall be as provided in chapter 12 of this title. (Ord. G-60, 3-22-1966)

R2 SINGLE-FAMILY DETACHED RESIDENCE DISTRICT		
Standard for:	Residentail Use	Non-Residentail Use
Minimum Lot Area	1 acre	1 acre
Minimum Lot width	150'	150'
Maximum Structure Height[4]	45' or 35'[1]	45'
Maximum Principal Building Lot Coverage	0.20	0.20
Maximum Lot Coverage	0.375	0.375
Maximum FAR	0.4	0.4
Minimum Yard Setbacks		
Front Yard	40'	40'
Interior Side Yard	18' or 23'[2]	30'[3]
Street Side Yard	40'	50'
Rear Yard	60'	60'
Minimum Ground Floor Area per Dwelling		
Single Story	1,800 sq. ft.	-
Bilevel	1,600 sq. ft.	-
Two or more Stories	1,250 sq. ft.	-

[1] For continious flat roofs.

[2]Minimum interior yard setback to accommodate side load garage. Setback is measured from the farthest projection of the building, not the building foundation. The width of the pavement in front of the garage door must be a minimum of twenty-three feet (23').

[3]Increased 2' for each 1' of structure height over 30'

[4]Where residential building heights exceed thirty feet (30'), the heighest space that meets the criteria of Sections R304, R305 & R311.4 for habitable space shall have an emergency escape and rescue opening in compliance with Section R310 at a maximum elevation of thirty two feet (32') above grade. This section shall be applied regardless of the usage designation on the construction documents, including "storage" or "bonus" rooms.

See Section 13-3 for additional structure height information.

ARTICLE C. R3 SINGLE-FAMILY DETACHED RESIDENCE DISTRICT

SECTION:

13-6C-1: Permitted Uses

13-6C-2: Special Uses

13-6C-3: Lot Area Requirements

13-6C-4: Additional Regulations

13-6C-1: PERMITTED USES:

Permitted uses shall be those as in the R1 single-family detached residence district. (Ord. G-60, 3-22-1966)

13-6C-2: SPECIAL USES:

Special uses shall be those as in the R1 single-family detached residence district; and

Residential development of cluster type single-family detached dwellings intended for occupancy by persons fifty five (55) years of age or older, and all occupants at least eighteen (18) years of age or older, on parcels not less than thirty (30) acres in area 1 .

Residential development of existing buildings of historical, architectural or cultural significance 2 . (Ord. G-60, 3-22-1966; Ord. G-83, 4-9-1968; Ord. G-203, 12-14-1976; Ord. G-608, 3-10-1998)

Notes

1 1. See section 13-6-5 of this chapter.

2 2. See section 13-6-4 of this chapter.

13-6 C-3: LOT AREA REQUIREMENTS:

A. Reduction Of Lot Area: Not less than twenty five thousand (25,000) square feet, except that in subdivisions of eighty (80) acres or more in area, the lot area may be reduced to one-half (1/2) acre provided that lands equal to ten percent (10%) of the total area be dedicated to the village, or agency approved by the village board, for park or recreational uses and no portion of which shall be less than four (4) acres. The dedicated land shall be appropriate for park or recreational uses, and shall not include wet drainageways in excess of twenty five percent (25%) of the total dedicated area.

B. Lot Width: Not less than one hundred feet (100') within the buildable area.

C. Floor Area Ratio: Not to exceed 0.4 ~~for nonresidential uses~~.

D. Maximum Lot Coverage: Not to exceed .375 ~~for nonresidential uses~~.

E. Maximum Lot Area Coverage (Principal Structures): Not to exceed .20.

F. Structure Height:

1. Residential Uses: Not more than forty feet (40') except for continuous flat roofs, which shall be not more than thirty feet (30') to the top of any parapet wall. However, where residential building heights exceed thirty feet (30'), the highest space that can be occupied must have an emergency escape and rescue opening at a maximum elevation of thirty two feet (32') above grade.

2. Institutional And Other Nonresidential Uses: Not more than forty five feet (45').

G. Ground Floor Area Per Dwelling:

1. One story: Not less than one thousand five hundred (1,500) square feet.

2. Bilevel: Not less than one thousand three hundred (1,300) square feet (floors at grade and above basement).

3. Dwellings having more than one story: Not less than one thousand (1,000) square feet.

H. Yards: Except as required in subsections 13-6A-1B and D of this chapter under accessory uses and structures", yards shall be provided as follows:

4. Front: Not less than forty feet (40') in depth.

5. Side: Not less than twelve feet (12') in depth except:

a. A side yard abutting a street shall be not less than forty feet (40') in depth;

b. To accommodate a side load garage, the minimum side yard setback (on 1 side yard) must be at least twenty three feet (23'); the width of the pavement opposite of the garage door must be a minimum of twenty three feet (23');

c. For nonresidential uses each side yard abutting a street shall be not less than fifty feet (50') in depth and each interior side yard shall be not less than thirty feet (30') in depth and increased by not less than two feet (2') for each one foot (1') of structure height over thirty feet (30').

6. Rear: Not less than forty feet (40') in depth. (Ord. G-60, 3-22-1966; Ord. G-83, 4-9-1968; Ord. G-203, 12-14-1976; Ord. G-730, 9-23-2003; Ord. G-977, 8-14-2012)

13-6 C-4: ADDITIONAL REGULATIONS:

A. Off Street Parking And Loading: Off street parking and loading shall be as provided in chapter 12 of this title. (Ord. G-60, 3-22-1966)

R3 SINGLE-FAMILY DETACHED RESIDENCE DISTRICT		
Standard for:	Residentail Use	Non-Residentail Use
Minimum Lot Area	25,000 sq. ft.	25,000 sq. ft.
Minimum Lot width	100'	100'
Maximum Structure Height[4]	40' or 30'[1]	45'
Maximum Principal Building Lot Coverage	0.20	0.20
Maximum Lot Coverage	0.375	0.375
Maximum FAR	0.4	0.4
Minimum Yard Setbacks		
Front Yard	40'	40'
Interior Side Yard	12' or 23'[2]	30'[3]
Street Side Yard	40'	50'
Rear Yard	40'	40'
Minimum Ground Floor Area per Dwelling		
Single Story	1,800 sq. ft.	-
Bilevel	1,600 sq. ft.	-
Two or more Stories	1,250 sq. ft.	-

[1] For continious flat roofs.

[2]Minimum interior yard setback to accommodate side load garage. Setback is measured from the farthest projection of the building, not the building foundation. The width of the pavement in front of the garage door must be a minimum of twenty-three feet (23').

[3]Increased 2' for each 1' of structure height over 30'

[4]Where residential building heights exceed thirty feet (30'), the heighest space that meets the criteria of Sections R304, R305 & R311.4 for habitable space shall have an emergency escape and rescue opening in compliance with Section R310 at a maximum elevation of thirty two feet (32') above grade. This section shall be applied regardless of the usage designation on the construction documents, including "storage" or "bonus" rooms.

See Section 13-3 for additional structure height information.

ARTICLE D. R4 SINGLE-FAMILY DETACHED RESIDENCE DISTRICT

SECTION:

13-6D-1: Permitted Uses

13-6D-2: Special Uses

13-6D-3: Lot Area Requirements

13-6D-4: Additional Regulations

13-6D-1: PERMITTED USES:

Permitted uses are those as in the R1 single-family detached residence district. (Ord. G-60, 3-22-1966)

13-6D-2: SPECIAL USES:

Special uses are those as in the R1 single-family detached residence district; and

Single-family detached, attached and semidetached dwellings, on parcels not less than fifty (50) acres in area, provided that the gross density of each such development shall not exceed three (3) dwelling units per acre; the structure heights shall not exceed thirty feet (30'); no structure shall contain more than two and one-half (21/2) stories; the ground floor living area per dwelling shall not be less than one thousand three hundred (1,300) square feet for a one story dwelling and nine hundred (900) square feet for a dwelling of more than one story; the minimum distance between principal buildings, as measured between bearing walls, shall be not less than twenty feet (20'), except that this distance may be reduced by two feet (2') if one of such walls encloses an attached garage or carport and by four feet (4') if each of such walls encloses an attached garage or carport; provided further, that each principal building shall be set back at least thirty feet (30') from dedicated public streets, off street loading and off street parking requirements shall be as provided in chapter 12 of this title; and provided that a preliminary development plan indicates sufficiently clearly the proposed streets, rights of way, lot sizes and setbacks, so that the village board in granting approval of such preliminary plan may clearly define the areas of any special restrictions it may wish to impose and that approval of the final subdivision plan shall be subject to same. (Ord. G-60, 3-22-1966)

13-6 D-3: LOT AREA REQUIREMENTS:

A. Lot Area:

1. Not less than eighteen thousand (18,000) square feet, except that in subdivisions forty (40) acres or more in area, the lot area may be reduced to fifteen thousand (15,000) square feet provided that lands equal to ten percent (10%) of the total area be dedicated to the village, or agency approved by the village board, for park or recreational uses and no portion of which shall be less than four (4) acres.

2. For single-family detached dwellings, the dedicated land shall be appropriate for park or recreational uses, and shall not include wet drainageways in excess of twenty five percent (25%) of the total dedicated area.

B. Lot Width: Not less than seventy five feet (75') within the buildable area.

B. Floor Area Ratio: Not to exceed 0.4 ~~for nonresidential uses~~.

C. Maximum Lot Coverage: Not to exceed .375 ~~for nonresidential uses~~.

D. Maximum Lot Area Coverage (Principal Structures): Not to exceed .20.

E. Structure Height:

1. Residential Uses: Not more than thirty five feet (35') except for continuous flat roofs, which shall be not more than thirty feet (30') to the top of any parapet wall. However, where residential building heights exceed thirty feet (30'), the highest space that can be occupied must have an emergency escape and rescue opening at a maximum elevation of thirty two feet (32') above grade.

2. Institutional And Other Nonresidential Uses: Not more than forty five feet (45').

F. Ground Floor Area Per Dwelling:

1. One story: Not less than one thousand three hundred (1,300) square feet.

2. Bilevel: Not less than one thousand one hundred (1,100) square feet (floors at grade and above basement).

3. Dwellings having more than one story: Not less than nine hundred (900) square feet.

G. Yards: Except as required in subsections 13-6A-1B and D of this chapter under "accessory uses and structures", yards shall be provided as follows:

1. Front: Not less than thirty feet (30') in depth.

2. Side: Not less than ten feet (10') in depth except:

a. A side yard may be reduced to not less than eight feet (8') provided the adjoining lot contains a dwelling with an attached garage or carport adjacent to such side yard unless a side load garage is present;

b. A side yard abutting a street shall be not less than thirty feet (30') in depth;

c. To accommodate a side load garage, the minimum side yard setback (on 1 side yard) must be at least twenty three feet (23'); the width of the pavement opposite of the garage door must be a minimum of twenty three feet (23');

d. For nonresidential uses each side yard abutting a street shall be not less than thirty feet (30') in depth and each interior side yard shall be not less than thirty feet (30') in depth and increased by not less than two feet (2') for each one foot (1') of structure height over thirty feet (30').

3. Rear: Not less than thirty feet (30') in depth. (Ord. G-60, 3-22-1966; Ord. G-66, 12-19-1966; Ord. G-83, 4-9-1968; Ord. G-203, 12-14-1976; Ord. G-608, 3-10-1998; Ord. G-730, 9-23-2003; Ord. G-977, 8-14-2012)

13-6 D-4: ADDITIONAL REGULATIONS:

A. Off Street Parking And Loading: Off street parking and loading shall be as provided in chapter 12 of this title. (Ord. G-60, 3-22-1966)

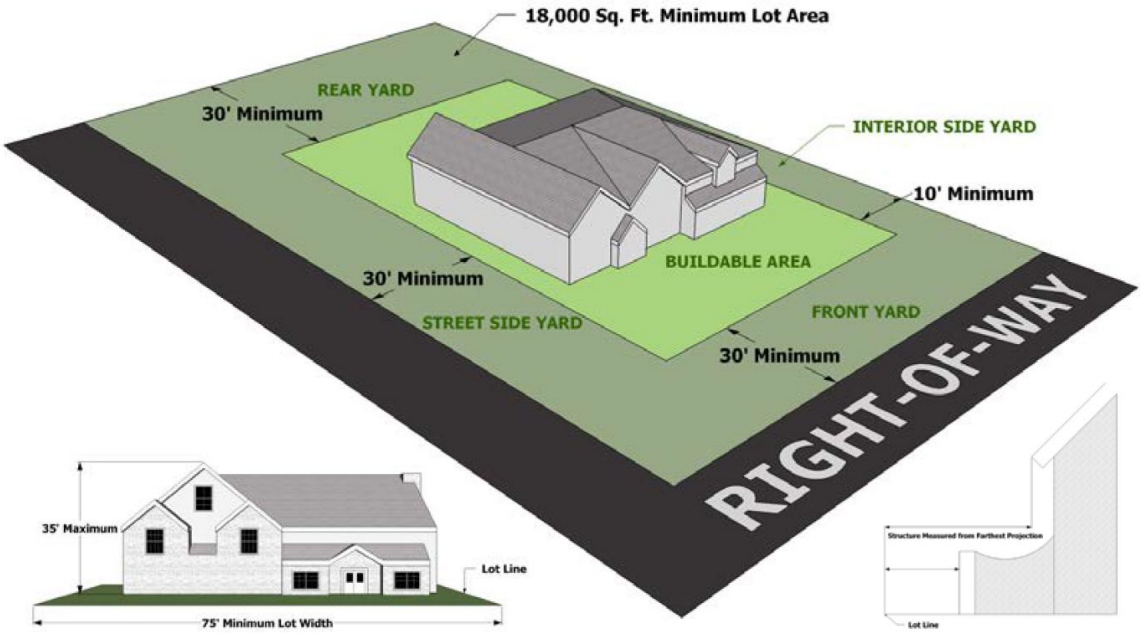

R4 SINGLE-FAMILY DETACHED RESIDENCE DISTRICT		
Standard for:	Residentail Use	Non-Residentail Use
Minimum Lot Area	18,000 sq. ft.	18,000 sq. ft.
Minimum Lot width	75'	75'
Maximum Structure Height[4]	35' or 30'[1]	45'
Maximum Principal Building Lot Coverage	0.20	0.20
Maximum Lot Coverage	0.375	0.375
Maximum FAR	0.4	0.4
Minimum Yard Setbacks		
Front Yard	30'	30'
Interior Side Yard	10' or 23'[2]	30'[3]
Street Side Yard	30'	30'
Rear Yard	30'	30'
Minimum Ground Floor Area per Dwelling		
Single Story	1,300 sq. ft.	-
Bilevel	1,100 sq. ft.	-
Two or more Stories	900 sq. ft.	-

[1] For continious flat roofs.

[2]Minimum interior yard setback to accommodate side load garage. Setback is measured from the farthest projection of the building, not the building foundation. The width of the pavement in front of the garage door must be a minimum of twenty-three feet (23').

[3]Increased 2' for each 1' of structure height over 30'

[4]Where residential building heights exceed thirty feet (30'), the heighest space that meets the criteria of Sections R304, R305 & R311.4 for habitable space shall have an emergency escape and rescue opening in compliance with Section R310 at a maximum elevation of thirty two feet (32') above grade. This section shall be applied regardless of the usage designation on the construction documents, including "storage" or "bonus" rooms.

See Section 13-3 for additional structure height information.

ARTICLE E. R5 RESIDENCE DISTRICT

SECTION:

13-6E-1: Permitted Uses

13-6E-2: Special Uses

13-6E-3: Lot Area Requirements

13-6E-4: Additional Regulations

13-6E-1: PERMITTED USES:

Accessory uses and structures including those uses and structures customarily accessory to residential dwellings.

Duplexes.

Home occupations.

Nameplates and signs.

Parks and playgrounds.

Public schools, parochial school, nonboarding elementary, junior high and high, on lots not less than eight (8) acres in area for an elementary school and not less than twenty five (25) acres in area for a high school. (Ord. G-903, 11-10-2009)

13-6E-2: SPECIAL USES:

Cemeteries (subject to compliance with the regulations in chapter 16 of this title): Any existing cemetery and structure shall be deemed to have a special use permit as required by this section, notwithstanding whether these existing cemeteries and structures comply, as of January 22, 2013, with the provisions of chapter 16 of this title. Any expansion, change, or new construction relating to an existing cemetery and structure shall comply with chapter 16 of this title, but any such activity shall not require a new or amended special use permit, or other zoning relief, provided that the activities comply with chapter 16 of this title. Notwithstanding the foregoing, no special use permit granted pursuant to this section, whether for an existing cemetery and structure or for a new cemetery or structure, shall permit a community burial structure to be built in a residence district.

Churches, chapels, temples and synagogues: On lots not less than three hundred feet (300') in width and not less than two (2) acres in area and one additional acre for each two hundred forty (240) seats in the sanctuary over two hundred forty (240) seats. Where churches and parochial schools are on the same land, not less than eight (8) acres in area.

Cultural and recreational facilities: Outdoor and indoor cultural and recreational facilities including, but not limited to, swimming pools, tennis courts, meeting facilities and other similar facilities accessory to and owned in common by the owners of properties within a residential development.

Multi-family age-restricted dwellings, provided that the following conditions, in addition to those set forth in Zoning Ordinance Section 13-14-9, are met:

A. The petitioner must provide the Village with an analysis of the proposed development's anticipated impact on emergency services, including, without limitation, the anticipated cost of providing those services. In accordance with Section 1-14-1(B), all costs incurred by the Village reviewing the petitioner's analysis, including the costs of professional consultants, shall be borne by the petitioner;

B. The petitioner must provide the Village with a plan addressing how emergency service calls will be handled, including, without limitation, how the petitioner will assist the Village in handling the provision and/or cost of emergency services that are specifically and uniquely attributable to the proposed development, so as to protect the public health, safety, and welfare; and

C. The petitioner must provide the Village with a market study addressing the demand for the proposed development. The market study must take into account the local and county demand for the proposed development.

Public utility, transportation, and government facilities: Public utility, transportation, and governmental service facilities, including municipal offices and civic centers, public libraries, police and fire stations, public works facilities, conference of municipal governments and ancillary uses (including organizations which provide consultation solely to units of local government), and similar uses.

Recreational and cultural uses.

Residential townhomes and condominiums.

Senior housing including nursing homes, independent living, assisted living and congregate care facilities. (Ord. G-903, 11-10-2009; Ord. G-989, 1-22-2013; Ord. S-1559, 2-12-2019)

13-6 E-3: LOT AREA REQUIREMENTS:

A. District Area: Not less than four (4) acres.

B. Density:

1. Duplexes: Gross density shall not exceed six (6) dwelling units per acre.

2. Residential townhomes and condominiums: Gross density shall not exceed eight (8) dwelling units per acre. Additional density bonuses shall be permitted for the inclusion of the following site amenities:

a. Underground parking (for all required parking spaces): Four (4) units per acre.

b. Open space in excess of thirty percent (30%) of the project area: Two (2) units per acre.

3. Senior housing including nursing homes, independent living, assisted living and congregate care facilities: Fifteen (15) units per acre.

a. Underground parking (for all required parking spaces): Four (4) units per acre.

b. Open space in excess of thirty percent (30%) of the project area: Two (2) units per acre.

C. Floor Area Ratio: Not to exceed 0.5 for nonresidential uses.

D. Maximum Lot Area Coverage (Principal Structures): Not to exceed .35 for residential use.

E. Structure Height:

1. Duplexes: Not more than thirty five feet (35') except for continuous flat roofs, which shall be not more than thirty feet (30') to the top of any parapet wall. However, where residential building heights exceed thirty feet (30'), the highest space that can be occupied must have an emergency escape and rescue opening at a maximum elevation of thirty two feet (32') above grade.

2. All other uses: Fifty feet (50').

F. Yards:

1. Front: Not less than forty feet (40') in depth.

2. Side: Not less than twenty feet (20') in depth except:

a. A side yard abutting a street shall be not less than forty feet (40') in depth;

b. To accommodate a side load garage, the minimum side yard setback (on 1 side yard) must be at least twenty three feet (23'); the width of the pavement opposite of the garage door must be a minimum of twenty three feet (23');

c. For nonresidential uses each side yard abutting a street shall be not less than thirty feet (30') in depth and each interior side yard shall be not less than thirty feet (30') in depth and increased by not less than two feet (2') for each one foot (1') of structure height over thirty feet (30').

3. Rear: Not less than forty feet (40') in depth. (Ord. G-903, 11-10-2009; Ord. G-977, 8-14-2012)

13-6 E-4: ADDITIONAL REGULATIONS:

A. Off Street Parking And Loading: Off street parking and loading shall be as provided in chapter 12 of this title with the following exceptions:

1. Off street parking for senior housing including nursing homes, independent living, assisted living and congregate care facilities shall be at a ratio not less than one parking space per dwelling unit. This parking ratio may be decreased upon the submittal of detailed parking study and review/approval by the village engineer. (Ord. G-903, 11-10-2009)

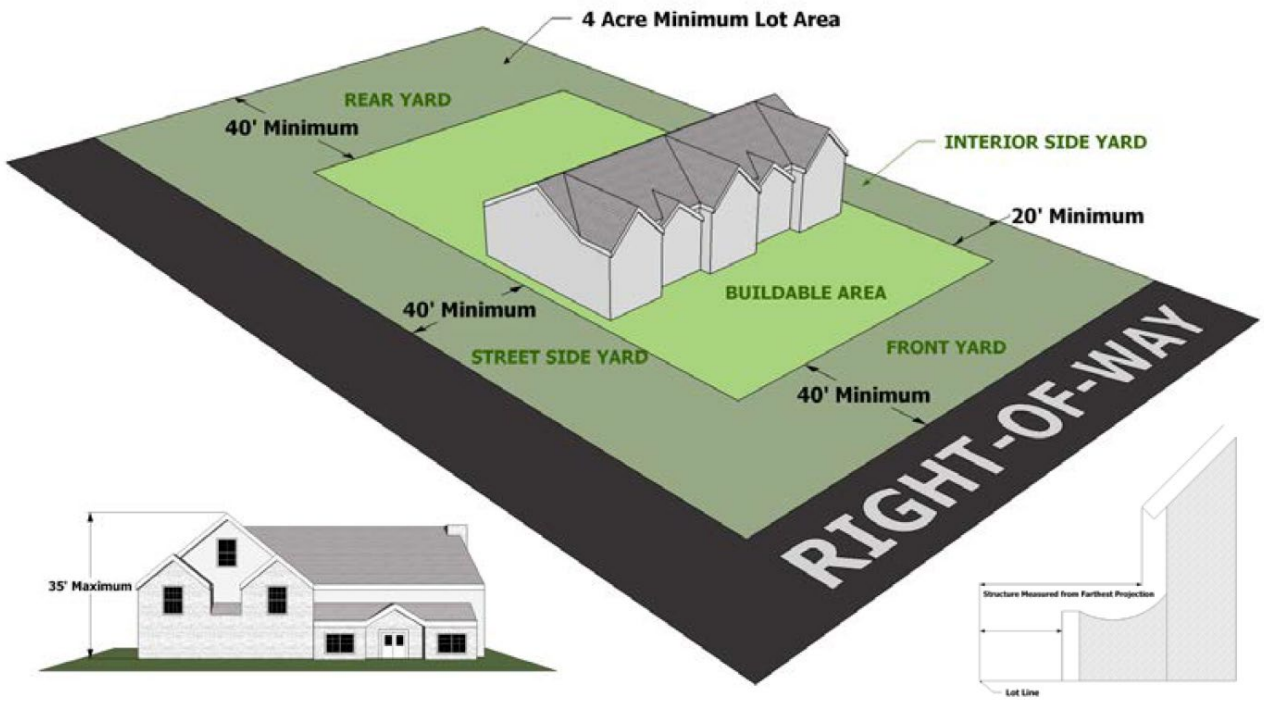

R5 RESIDENCE DISTRICT		
Standard for:	Residentail Use	Non-Residentail Use
Minimum Lot Area	4 acrea	4 acres
Maximum Structure Height[4]	35' or 30'[1]	50'
Maximum FAR	0.1	0.5
Maximum Lot Coverage (Principal Structures)	0.20	0.30
Minimum Yard Setbacks		
Front Yard	30'	30'
Interior Side Yard	10' or 23'[2]	30'[3]
Street Side Yard	30'	30'
Rear Yard	30'	30'

[1] For continious flat roofs.

[2]Minimum interior yard setback to accommodate side load garage. Setback is measured from the farthest projection of the building, not the building foundation. The width of the pavement in front of the garage door must be a minimum of twenty-three feet (23').

[3]Increased 2' for each 1' of structure height over 30'

See Section 13-3 for additional structure height information.

CHAPTER 7
BUSINESS DISTRICTS

SECTION:

13-7-1 : Purpose

13-7-2 : Establishment of Commercial Districts:

13-7-~~2~~3: Two Or More Uses On A Lot

13-7-4 : Location or Retail Sales On-Premise:

13-7-5 : Outdoor Sales and Uses:

~~13-7-3 : Scope~~

~~13-7-4 : Performance Standards~~

13-7-~~5~~6: Truck Parking

13-7-7: Outdoor Dining Areas

13-7-1 : PURPOSE:

The business districts provide for groupings of business and other nonresidential establishments in accordance with their compatibility, functions and scope of service. The regulations of the various business districts are designed to govern developments ranging from the local shopping areas serving primarily residents of the village to those which serve the region. (Ord. G-60, 3-22-1966; Ord. G-514, 7-13-1993)

13-7-2 : ESTABLISHMENT OF COMMERCIAL DISTRICTS:

B1 Local Shopping Center District – This district focuses on supplying the nearby residential uses with small to medium scale retail and service uses. This includes retail stores, personal services, and restaurants which are typically adjacent to residential neighborhoods.

B2 Regional Shopping Center District – This district focuses on providing a centralized area along major automotive corridors offering a diverse range of retail, service, dining, entertainment, hospitality, fitness, health and office facilities for local and regional populations.

B3 General Business District – This district focuses on general retail and is typically located along major commercial corridors and not necessarily adjacent to residential uses. This district will see larger corporate stores and is more tailored to the automobile for transportation.

B4 Hotel-Office District – This district focuses on large scale hotel and office use developments as well as supportive uses. This district is intended to provide hotel guests

and office users a variety of commercial uses and services nearby.

13-7-~~2~~3: TWO OR MORE USES ON A LOT:

Wherever two (2) or more permitted uses or special uses, each requiring a minimum lot area, are located in the same building or on the same lot, the required minimum lot area shall be the sum of the areas required for each use individually. When one or more uses has a required minimum lot area, the total lot area shall equal the sum of the required lot areas plus an additional area equivalent to that devoted to the use which does not have a required minimum lot area. (Ord. G-60, 3-22-1966; Ord. G- 514, 7-13-1993)

13-7-3 ~~: SCOPE:~~

13-7-~~3~~4: LOCATION OF RETAIL SALES ON-PREMISE:

A. All business establishments shall be retail trade or service establishments dealing directly with consumers and all goods produced on the premises shall be sold on the premises where produced, except for approved specialty retail programs in outdoor areas of a shopping center in districts where permitted as a special use.

13-7-5 : OUTDOOR SALES AND USES

~~B~~A. All business, service, storage, merchandise, display and where permitted, repair and processing shall be conducted wholly within a completely enclosed building except for:

1. Off street automobile parking, off street loading, and open sales lots and drive-in facilities in districts where they are permitted;

2. Outdoor dining areas adjacent to restaurants in districts where outdoor dining areas are ~~a~~ permitted ~~use;~~ and approved by the Development Services department;

3. Approved specialty retail programs in outdoor areas of a shopping center in districts where permitted as ~~a special use;~~ approved by the Development Services department;

4. Outdoor sales events on a property in any business district provided that all of the following conditions are met:

a. Any such use shall require the prior approval of the Development Services department on the basis of the adequacy of the lot size, parking provisions, and traffic access, and the absence of undue adverse impact on other properties. Such event shall be of a limited duration (14 days or less per event) occurring no more than two (2) times in any calendar year; and

~~b. Such event is held in a temporary enclosure that received all required permits from the village; and~~

~~c~~b. Such event offers for sale only items that are normally sold inside the building in conformity with the principal use of the subject property; and

~~d~~c. Such event conforms to all signage and setback requirements of the underlying zoning district; and

~~e~~d. The property complies with all parking requirements of the underlying district, or, in the alternative, the petitioner reasonably demonstrates that notwithstanding any temporary noncompliance, the conduct of the event will not impose any undue traffic or parking burden on surrounding properties and streets; and

~~f~~e. Such event is approved by the ~~village board of trustees~~ Development Services department upon petition or written request from the property owner detailing prospective compliance with the conditions herein~~; and~~.

5. ~~Farmers' markets and/or French markets involving the sale of flowers, culinary accessories and edible items for consumption off the premises where the sale is made in districts where permitted as a special use.~~

5. Mobile Food Vendors/ Food Trucks are prohibited in the Village of Oak Brook with the exception of special events as defined under, Section 4-12-2.

B. ~~Goods sold shall consist primarily of new merchandise, except for antique shops. (Ord. G-60, 3-22-1966; Ord. G-572, 6-11-1996; Ord. G-721, 6-10-2003; Ord. G-870, 9-9-2008; Ord. G-915, 1-12-2010; Ord. G-1163, 4-28-2020)~~ The Following outdoor sales uses are prohibited:

1. Vending machines, including but not limited to the dispensing of food, rental movies or other multi-media, beverages, and other goods for retail sale.

C. Outdoor Storage

For all Commercial Districts, the following regulations apply to outdoor sales and uses:

1. No outdoor storage area shall be located between any principal structure and either its front or corner side lot line, except as specifically approved of by the Village Board during site plan review or planned development approval process after consideration by the Planning and Zoning Commission; and

2. All outdoor storage shall be enclosed by a screening fence, wall, or densely planted evergreen hedge of a height sufficient to screen such containers or storage areas from view from adjoining properties and public or private streets. (See Chapter 18 of this Title)

~~13-7-4: PERFORMANCE STANDARDS:~~

~~All activities involving the production, processing, cleaning, servicing, testing, or repair of materials, goods or products, shall conform with the performance standards established for the ORA office-research-assembly districts 1 . (Ord. G-60, 3-22-1966)~~

-

~~Notes~~

~~1~~ ~~1. See section 13-10-3 of this title.~~

13-7-~~5~~6: TRUCK PARKING:

Trucks in excess of one and one-half (11/2) tons' capacity used in conjunction with the operations of any use permitted in business districts shall not be parked in the open within one hundred fifty feet (150') of a residence district boundary line, except during normal business hours. (Ord. G-60, 3-22-1966)

13-7-67 : OUTDOOR DINING AREAS:

A. For the purposes of this section, "outdoor dining areas" are defined as the use of an adjacent, outside area by a restaurant for the same eating and drinking activities that occur within the restaurant.

B. The following regulations shall apply to outdoor dining areas:

1. The location of any outdoor dining area comply with all setback requirements in the applicable zoning district and shall not obstruct pedestrian or vehicular traffic. A minimum of five feet (5') of sidewalk clearance shall be maintained at all times for pedestrian travel;

2. Any outdoor dining area be under the direct supervision and control of the principal restaurant, and such dining area be enclosed by a fence or other protective safety barrier which shall be constructed to clearly delineate the boundaries of the area and to protect the health and safety of restaurant patrons and the general public;

3. The hours of operation of any outdoor dining area be within the normal operating hours of the principal restaurant;

4. There shall be no live entertainment in the outdoor dining area;

5. Plans shall be provided delineating the location of the outdoor dining area, and such location be approved by the Building Official as part of a building permit. The outdoor dining area shall be maintained in compliance with the approved plans;

6. The principal restaurant and outdoor dining area shall be in compliance with all the requirements of this code and all other applicable rules and regulations of any other governing agency including the DuPage County Health Department regarding restaurant and outdoor dining areas. (Ord. G-1163, 4-28-2020)

ARTICLE A. B1 LOCAL SHOPPING CENTER DISTRICT

SECTION:

13-7A-1: Permitted Uses

13-7A-2: Special Uses

13-7A-3: Lot Area Requirements

13-7A-4: Additional Regulations

13-7A-1: PERMITTED USES:

Accessory uses and structures, including, but not limited to, off street loading, off street parking and business signs.

Antique shops.

Audio and video equipment, retail sales thereof, including components and related accessories, installation and servicing of such products in motor vehicles and conducted entirely within an enclosed structure with service entry at the rear of the building with no overnight parking.

Bakeries, where not more than thirty percent (30%) of the floor area is devoted to processing.

Banks and financial institutions.

Barbershops and beauty parlors.

Book and stationery stores.

Camera and photographic supply stores and photographic studios.

Candy and ice cream stores.

Clinics, medical and dental, including accessory laboratories.

Drugstores.

Dry cleaning and laundry retail establishments; provided that processing, if done on the premises, shall utilize nonexplosive and noninflammable materials, and that such processing shall be limited to service of the principal use.

Fire stations.

Florist shops.

Food stores including grocery stores, meat markets and delicatessens.

Gift shops.

Haberdasheries.

Hardware stores.

Health clubs.

Hobby, toy and game shops provided amusement arcades are not permitted.

Home decorating stores.

Home furniture and furnishings stores.

Housewares stores.

Jewelry stores, including watch, clock and jewelry repair.

Launderettes, including automatic self-service dry cleaning equipment.

Libraries, branch.

Liquor stores with a minimum of ten thousand (10,000) square feet of retail space.

Luggage and leather goods stores.

Men's and women's accessory and specialty stores.

Music stores.

Offices: business, professional and public.

Optical goods stores.

Police stations.

Post offices.

Restaurants, including cocktail lounges and outdoor dining areas (as described in section 13-7-6 of this Code).

Retail Establishment

Schools: Commercial, business, trade, music and dance subject to the conditions that the permitted use is limited to second floor space of any building where a school is located and that the use is limited to a maximum of ten percent (10%) of the total square footage of the shopping center in which it is located provided that adequate parking is provided to accommodate such use.

Shoe stores.

Sporting goods stores.

Temporary buildings, for construction purposes for a period not to exceed ninety (90) days following completion of the development.

Travel bureaus and transportation ticket offices.

Variety stores.

Wearing apparel shops. (Ord. G-60, 3-22-1966; Ord. G-444, 2-13-1990; Ord. G-778, 4-26-2005; Ord. G-835, 9-25-2007; Ord. G-901, 10-13-2009; Ord. G-1023, 5-13-2014; Ord. G-1163, 4-28-2020)

13-7 A-2: SPECIAL USES:

Accessory uses and structures, including, but not limited to, off street parking and off street loading spaces and business signs.

Automobile service stations, on lots not less than twenty thousand (20,000) square feet.

Clubs, lodges, fraternities and community centers on lots not less than twenty thousand (20,000) square feet.

Daycare center, provided such facility complies with all licensing requirements of the state and maintains a direct alarm hookup to the police department.

Drive-in banking facilities.

Farmers' markets and/or French markets involving the sale of flowers, culinary accessories and edible items for consumption off the premises where the sale is made provided that the following conditions are met:

A. Sale of used or preowned items is not permitted.

B. Farmers' market and/or French market may be conducted no more than one day per week on any property zoned for business purposes.

C. All signage and setback requirements of the underlying zoning district must be met.

D. The property on which the farmers' market and/or French market is conducted complies with all the parking requirements of the underlying zoning district or, in the alternative, the petitioner demonstrates that notwithstanding any temporary noncompliance, the conduct of the event will not impose any undue traffic or parking burden on surrounding properties and streets; and

E. The farmers' market and/or French market is approved by the Development Services department ~~of community development~~ upon application and submittal of all required information from the property owner detailing prospective compliance with the conditions herein.

Multi-family age-restricted dwellings, provided that the following conditions, in addition to those set forth in Zoning Ordinance Section 13-14-9, are met:

A. The petitioner must provide the Village with an analysis of the proposed development's anticipated impact on emergency services, including, without limitation, the anticipated cost of providing those services. In accordance with Section 1-14-1(B), all costs incurred by the Village reviewing the petitioner's analysis, including the costs of professional consultants, shall be borne by the petitioner;

B. The petitioner must provide the Village with a plan addressing how emergency service calls will be handled, including, without limitation, how the petitioner will assist the Village in handling the provision and/or cost of emergency services that are specifically and uniquely attributable to the proposed development, so as to protect the public health, safety, and welfare; and

C. The petitioner must provide the Village with a market study addressing the demand for the proposed development. The market study must take into account the local and county demand for the proposed development.

Office supply stores.

Public utility, governmental service and transportation uses:

Bus turnarounds and passenger shelters.

Electric distribution centers and substations.

Gas regulator stations.

Outdoor ATM (automated teller machine) walk-up or drive-thru

Retail; Display Showroom

Sewage and stormwater lift stations.

Telephone exchanges and transmission buildings and equipment, and outdoor telephone booths and pedestals.

Water filtration plants, wells, pumping stations and reservoirs.

Restaurants and accessory cocktail lounges, without facilities for dancing and live entertainment, on lots not less than two hundred feet (200') in width and not less than one and one-half (11/2) acres in area.

Senior housing and nursing homes on lots not less than three hundred feet (300') in width and not less than two (2) acres in area. (Ord. G-60, 3-22-1966; Ord. G-454, 10-9-1990; Ord. G-513, 6-22-1993; Ord. G-556, 7-11-1995; Ord. G-835, 9-25-2007; Ord. G-903, 11-10-2009; Ord. G-915, 1-12-2010; Ord. S-1559, 2-12-2019; Ord. G-1163, 4-28-2020)

13-7 A-3: LOT AREA REQUIREMENTS:

A. Floor Area Ratio: Not to exceed 0.5.

B. Structure Height: Not more than fifty feet (50') and not more than two (2) stories.

C. Yards:

1. No structure, other than access drives and paved parking areas, and signs as provided in subsection 13-7A-4A of this article, shall be erected or maintained within the following distances:

a. Sixty feet (60') from the right of way of any public street;

b. Thirty feet (30') from a district boundary which abuts a public right of way which does not afford a primary means of access to the district; and

c. Sixty feet (60') from any other district boundary; except when adjacent to a B2 district boundary line; provided, however, that the area between a building and the right of way of any street or other district boundary may be occupied by drives, drive-in banking facilities, vehicular parking, sidewalks, landscaping and similar facilities, except paved parking, areas shall not be located closer than ten feet (10') to any lot in a residence district or ten feet (10') to any public street;

except that building shall be set back not less than one hundred feet (100') from the rights of way of York Road, 22nd Street and 31st Street.

2. For the purpose of interpreting and enforcing the yard regulations of this section, the entire area included within a B1 district, except that portion separated by a dedicated public street, shall be considered as a single zoning lot; more than one building or structure may, however, be erected thereon; and the only front, side and rear yards that need to be observed are those provided for in subsection C1 of this section. (Ord. G-60, 3-22-1966; Ord. G-513, 6-22-1993; Ord. G-778, 4-26-2005)

13-7 A-4: ADDITIONAL REGULATIONS:

A. Awnings, Marquees And Signs: See chapter 11 of this title.

B. Off Street Parking And Loading: Off street parking and loading shall be as provided in chapter 12 of this title. (Ord. G-60, 3-22-1966; Ord. G-85, 5-14-1968; Ord. G-513, 6-22-1993; Ord. G-695, 3-26-2002)

ARTICLE B. B2 REGIONAL SHOPPING CENTER DISTRICT

SECTION:

13-7B-1: Permitted Uses

13-7B-2: Special Uses

13-7B-3: Lot Area Requirements

13-7B-4: Additional Regulations

13-7 B-1: PERMITTED USES:

Accessory uses and structures, including but not limited to storage and service areas within the structures, garages for delivery trucks, central heating and air conditioning plants, and storage areas, yards, shops and similar facilities that are used solely for operating, servicing or maintaining the activities and improvements within the district.

Art galleries.

Automobile service stations and automobile sales, including show rooms, electric powering stations, fulfillment centers.

Banks and other financial institutions.

Barbershops, beauty parlors, and other aesthetic and personal wellness services, including but not limited to salons and spas.

Bus depots, cab stands, and pick-up/drop-off areas for ride- sharing services.

Candy, ice cream and bakery shops, and other shops selling food products, including but not limited to grocery stores, specialty food stores, butchers, delicatessens, health food stores, with or without accessory catering services, where the commodities may be produced on the premises; but all such production shall be either sold at retail on the premises or sold in stores owned and operated by the producing company.

Drugstores, pharmacies, and stores selling medical devices and homeopathic or herbal remedies (but not including medical cannabis dispensaries).

Data Center-Electronic data storage.

Furniture stores, including upholstery when conducted as part of the retail operation and secondary to the principal use.

Gas regulator stations.

Hospitals, having not more than ten (10) beds and first-aid stations for the treatment of emergency cases, and outpatient medical and aesthetic service facilities and uses, including but not limited to medical and dental offices and clinics, rehabilitative exercise and training centers, cosmetic surgery services, physical therapy, massage, and chiropractic services.

Hotels.

Hybrid uses. While commercial occupants in the B2 District may operate a single principal use with one or more accessory uses, other commercial occupants may have business operations that are or become a hybrid of multiple principal uses of significant and possibly equal importance. Hybrid use shall not include showrooms. The following are provided by way of example and not limitation:

A. Restaurants, cocktail lounges and tearooms, coffee houses, banquet facilities, micro-wineries, micro-breweries, micro-distilleries and other businesses offering the sale of food and beverage may be combined with retail, catering, event planning, musical performances and karaoke, dance floors, bowling, bocce, pool and billiards, ping pong and similar table games, arcade games, outdoor dining areas (as described in section 13-7-6) and other forms of service, entertainment and recreation.

B. Retail stores and shops, including department stores, may operate and offer related and complementary on-site uses and services (including but not limited to repair services, internet purchase fulfillment services, restaurant and food service, classes, indoor special events and

entertainment) and off-site services (including but not limited to event planning, catering and interior design).

C. Gyms, health clubs and other physical wellness facilities may be paired with restaurant and retail uses and offer nutritional and health classes, personal training and counseling, aesthetic services, and chiropractic, physical therapy, massage, medical services, including blood draws.

Interior decorating shops.

Job printing shops.

Laundries, dyeing and cleaning establishments, operated as an accessory use to some other use or uses permitted by this section, provided permits for the use of combustible and flammable materials, if to be used, are obtained from the Board of Trustees.

Laundries, self-service, and shops for the collection and distribution of laundry and dry cleaning articles.

Messenger and telephone service stations.

Offices.

Pet shops, grooming services, and veterinary clinics.

Photographer, artist or similar studios.

Post offices.

Printing plants, newspaper, magazine and similar publications.

Public and private garages.

Radio and television broadcasting stations.

Restaurants, cocktail lounges and tearooms, coffee houses, banquet facilities, micro-wineries, micro-breweries, outdoor dining areas (as described in section 13-7-6), and other businesses offering the sale of food and beverage (but not including micro-distilleries). Vertical and rooftop gardens that produce fruits, flowers and vegetables for on premises consumption and use.

Retail stores and shops, including department stores.

Retail Establishment

~~Sales and display rooms.~~

Schools, studios, classrooms, facilities and activities for personal or interactive learning, physical wellness and cultural enrichment, including but not limited to colleges, universities and test preparation services, art and craft classes, yoga and Pilates studios, gyms and physical fitness facilities, after- school programs for children, day camps, venues providing interactive entertainment and educational programming for children, and activity centers for seniors and adult learning. Structures for physical wellness uses are permitted to include, by way of

example and not limitation, indoor and outdoor exercise and participant sports facilities, swimming pools, playgrounds, and climbing walls.

Service, cleaning and repair shops, for personal, household or garden equipment.

Tailor or dressmaking shops, and similar repair services.

Theaters, except open air drive-in establishments. (Ord. G-1112, 9-26-2017; Ord. G-1163, 4-28-2020)

13-7 B-2: SPECIAL USES:

Amusement establishments that are not expressly listed as a permitted use under section 13-7B-1 of this article, such as spectator sports facilities, and are not otherwise prohibited by Village ordinance.

Automobile test drive areas that are designated exclusively as such and involve construction of specific physical improvements (as opposed to automobile testing within multi-functional vehicular areas).

Community centers that do not qualify as a permitted use under section 13-7B-1 of this article.

Daycare center, provided such facility complies with all licensing requirements of the State and maintains a direct alarm hookup to the Police Department.

Drive-in banking facility.

Electric distribution centers and substations.

Farmers' markets and/or French markets involving the sale of flowers, culinary accessories and edible items provided that the following conditions are met:

A. Sale of used or pre-owned items is not permitted unless allowed in the special use approval ordinance.

B. Farmers' market and/or French market may be conducted no more than one day per week unless otherwise allowed in the special use approval ordinance.

C. All signage and setback requirements of the underlying zoning district must be met.

D. The property on which the farmers' market and/or French market is conducted complies with all the parking requirements of the underlying zoning district or, in the alternative, the petitioner demonstrates that notwithstanding any temporary noncompliance, the conduct of the event will not impose any undue traffic or parking burden on surrounding properties and streets; and

E. The farmers' market and/or French market is approved by the ~~Department of Community~~ Development Services department upon application and submittal of all required information from the property owner detailing prospective compliance with the conditions herein.

Micro-distilleries.

Specialty retail programs that do not qualify as a permitted use under section 13-7B-1 of this article.

Pre-schools, including nursery schools and kindergartens.

Public utility, governmental service, and transportation uses:

Bus turnarounds and passenger shelters.

Fire and police stations.

Outdoor ATM (automated teller machine) walk-up or drive-thru when visible to a public right of way

Retail; Display Showroom

Sewage and stormwater lift stations.

Telephone exchanges and transmission buildings and equipment, and outdoor telephone booths and pedestals.

Water filtration plants, wells, pumping stations and reservoirs.

Specialty retail programs in outdoor areas of a shopping center as a convenience to pedestrian shoppers, provided: a) all aspects of the operation and sales meet the applicable requirements of the DuPage County Health Department; and b) specialty retail program facilities have appropriate utilities provided, are not convenient to drive-up businesses, and do not materially interfere with access to or visibility of other establishments within the shopping center.

Wireless communication towers. (Ord. G-1112, 9-26-2017; Ord. G-1163, 4-28-2020)

13-7 B-3: LOT AREA REQUIREMENTS:

A. Floor Area Ratio: Not to exceed 0.5; provided, however, that with regard to any increase of floor area over 0.3, not more than twelve and one-half percent (121/2%) of permissible floor area in excess of 0.3 shall be devoted to office use as permitted under section 13-7B-1 of this article.

B. Yards:

1. No structure, other than signs as provided for in subsection 13-7B-4A of this article shall be erected or maintained within the following distances:

a. Three hundred feet (300') from the right-of-way of 22nd Street or Route 83 (Kingery Expressway);

b. Eighty feet (80') from the right-of-way of any other street;

c. Eighty feet (80') from any other district boundary, except when adjacent to a B1 District, and except that when adjacent to a residence district boundary line, then not within one hundred fifty feet (150') of such boundary line; provided, however, that the area between

a building and the right-of-way of any street or other district boundary may be occupied by drives, drive-in banking facilities, vehicular parking, sidewalks, landscaping and similar facilities, except that paved areas shall not be located closer than forty feet (40') to any lot in a residence district.

2. For the purpose of interpreting and enforcing the yard regulations of this subsection, the entire area included within a B2 District, except that portion separated by a dedicated public street, shall be considered as a single zoning lot; more than one building or structure may, however, be erected thereon; and the only front, side and rear yards that need to be observed are those provided for in subsection B1 of this section. (Ord. G-60, 3-22-1966; Ord. G-229, 4-25-1978; Ord. G-414, 7-12-1988; Ord. G-513, 6-22-1993)

13-7 B-4: ADDITIONAL REGULATIONS:

A. Signs: See chapter 11 of this title.

B. Off Street Parking And Loading: Off street parking and loading shall be as provided in chapter 12 of this title. (Ord. G-60, 3-22-1966; Ord. G-85, 5-14-1968; Ord. G-695, 3-26-2002)

ARTICLE C. B3 GENERAL BUSINESS DISTRICT

SECTION:

13-7C-1: Permitted Uses

13-7C-2: Special Uses

13-7C-3: Lot Area Requirements

13-7C-4: Additional Regulations

13-7C-1: PERMITTED USES:

Accessory uses and structures.

Animal hospitals and veterinarian offices.

Art galleries.

Auction rooms.

Automobile accessory stores.

Automobile sales establishments.

Automobile service stations.

Banks and other financial institutions.

Bicycle stores, sales, rental and repair.

Blueprinting and photocopying establishments.

Building material sales, not including outside storage.

Camera and photographic supply stores.

Carpet and rug stores.

Cartage and express facilities; provided storage of goods, motor trucks or other equipment is in a completely enclosed building.

Catering establishments.

China and glassware stores.

Clinics, medical and dental, including accessory laboratories.

Clothes pressing establishments.

Clothing stores.

Clothing and costume rental shops.

Clubs, lodges and fraternal organizations.

Cocktail lounges.

Coin and philatelic stores.

Department stores.

Drug stores.

Dry cleaning and laundry retail establishments; provided, that processing, if done on the premises, shall utilize nonexplosive, nonflammable materials, that such processing shall be limited to service of the principal use.

Electrical, gas and other household appliance stores, including radio and television sales and accessory repair and service thereof.

Electric distribution centers and substations.

Employment agencies.

~~Exhibition halls.~~

Fire stations.

Food stores, including grocery stores, meat markets and delicatessens.

Furniture stores, including upholstery when conducted as part of the retail operation and secondary to the principal use.

Furrier shops, including the incidental storage and conditioning of furs.

Garages, public, where body repair and painting are incidental accessory uses, but not including automobile wrecking yards.

~~Garages, storage.~~

Garden supply and seed stores.

Gas regulator stations.

Greenhouses and conservatories.

Hobby shops, for retailing of items to be assembled or used away from the premises.

Interior decorating shops, including upholstery and making of draperies, slipcovers and other similar articles when conducted as part of the retail operation and secondary to the principal use.

Jewelry stores, including watch repair.

Job printing shops, using presses having beds of not more than fourteen inches by twenty inches (14" x 20").

Kennels, with no outdoor dog runs.

Laboratories, medical, dental or optical.

Leather goods and luggage stores.

Libraries.

Liquor stores, retail sales of package goods only.

Loan offices.

Locksmith shops.

~~Mail order service stores.~~

Millinery shops.

Music stores, sheet music and phonograph record sales.

Musical instrument sales and repair.

Offices.

Office supply stores.

Opticians and optometrists.

Orthopedic and medical appliance stores, not including the assembly or manufacture of such articles.

Paint and wallpaper stores.

Parking lots, for passenger motor vehicles only.

Pet service, domestic.

Pet shops.

Photography studios, including developing and printing of photographs, when conducted on the premises as a part of the retail business.

Physical culture and health service, gymnasiums, reducing salons, massage salons and public baths.

Picture framing, when conducted on the premises for retail trade.

Plumbing, heating, air conditioning and electrical fixtures and equipment, showroom and shops, for domestic use only.

Police stations.

Radio and television service and repair shops.

Recording studios.

Recreational buildings, community centers and meeting halls.

Religious institutions, churches, chapels, temples or synagogues.

Retail Establishment

Restaurants, including musical entertainment and dancing and outdoor dining areas (as described in section 13-7-6).

Schools, commercial or trade, provided that operations do not involve danger of fire, explosion, nor objectionable standards of noise, vibration, smoke, dust, odor, glare, heat or other nuisances.

Sewing machine sales and services, household machines only.

Shoe and hat repair stores.

Shoe stores.

Sporting goods stores.

Tailor shops.

Taxidermists.

Telegraph offices.

Theaters, indoor.

Tobacco shops.

Toy shops.

Travel bureaus and transportation ticket offices.

Typewriter and adding machine sales and service establishments.

Undertaking establishments and funeral parlors. (Ord. G-60, 3-22-1966; Ord. G-520, 8-24-1993; Ord. G-1163, 4-28-2020)

13-7 C-2: SPECIAL USES:

Accessory uses and structures, including, but not limited to, off street parking and off street loading spaces and business signs.

Amusement establishments, including bowling alleys, gymnasiums, swimming pools and skating rinks.

Automobile minimarket.

Daycare center, provided such facility complies with all licensing requirements of the state of Illinois and maintains a direct alarm hookup to the Oak Brook police department.

Drive-in establishments for permitted uses.

Farmers' markets and/or French markets involving the sale of flowers, culinary accessories and edible items for consumption off the premises where the sale is made provided that the following conditions are met:

A. Sale of used or preowned items is not permitted.

B. Farmers' market and/or French market may be conducted no more than one day per week on any property zoned for business purposes.

C. All signage and setback requirements of the underlying zoning district must be met.

D. The property on which the farmers' market and/or French market is conducted complies with all the parking requirements of the underlying zoning district or, in the alternative, the petitioner demonstrates that notwithstanding any temporary noncompliance, the conduct of the event will not impose any undue traffic or parking burden on surrounding properties and streets; and

E. The farmers' market and/or French market is approved by the Development Services department ~~of community development~~ upon application and submittal of all required information from the property owner detailing prospective compliance with the conditions herein.

Horse stables and riding academies, public, on a lot not less than ten (10) acres in area, provided buildings containing stables and accessory outdoor facilities are not less than one hundred fifty feet (150') from the nearest lot line.

Nursing homes, on lots not less than three hundred feet (300') in width and not less than two (2) acres in area.

Open sales lots, when accessory to new automobile, trailer or boat sales establishments.

Public utility, governmental service and transportation uses.

Bus turnarounds and passenger shelters.

Outdoor ATM (automated teller machine) walk-up or drive-thru

Sewage and stormwater lift stations.

Telephone exchanges and transmission buildings and equipment, and outdoor telephone booths and pedestals.

Water filtration plants, wells, pumping stations and reservoirs.

Recreation, outdoor, par 3 and miniature golf courses, golf driving ranges, swimming and tennis clubs, and other outdoor recreation uses as approved by the village board of trustees.

Retail; Display Showroom

Senior housing.

Trailer or boat sales establishments, for new trailer or boat sales. (Ord. G-60, 3-22-1966; Ord. G-305, 9-8-1981; Ord. G-449, 8-14-1990; Ord. G-454, 10-9-1990; Ord. G-819, 12-12-2006; Ord. G-903, 11-10-2009; Ord. G-915, 1-12-2010; Ord. G-1163, 4-28-2020)

13-7 C-3: LOT AREA REQUIREMENTS:

A. Floor Area Ratio: Not to exceed 1.2.

B. Structure Height: Not more than thirty-five feet (35') and not more than three (3) stories.

C. Yards: As in B1 local shopping center district, except: 1) for automobile service stations where islands containing fuel pumps and air and water outlets, with or without connecting shelters, shall have a front yard, or a side yard adjoining a street not less than twenty five feet (25') in depth; and 2) front and side yards abutting 22nd Street and York Road shall have a depth not less than one hundred feet (100'). (Ord. G-60, 3-22-1966)

13-7 C-4: ADDITIONAL REGULATIONS:

A. Awnings, Marquees And Signs: See chapter 11 of this title.

B. Off Street Parking And Loading: Off street parking and loading shall be as provided in chapter 12 of this title. (Ord. G-60, 3-22-1966; Ord. G-695, 3-26-2002)

ARTICLE D. B4 HOTEL-OFFICE DISTRICT

SECTION:

13-7D-1: Permitted Uses

13-7D-2: Special Uses

13-7D-3: Lot Area Requirements

13-7D-4: Additional Regulations

13-7D-1: PERMITTED USES:

Accessory uses and structures including:

Restaurants and accessory cocktail lounges, and outdoor dining areas (as described in section 13-7-6) which is used principally for a permitted use, and when located on floors below those used for the principal use or on the top floor or roof of such a structure.

Retail sales and personal service uses, having no exterior advertising and accessible only from the lobby and interior of a building and used for a permitted principal use and when no single establishment occupies more than two thousand (2,000) square feet of floor area.

Electric distribution centers and substations.

Gas regulator stations.

Hotels and motels (minimum of 50 rooms).

Hotel, Apartment

Hotel, Condominium

Offices, institutional and fraternal.

Sewage and stormwater lift stations.

Telephone exchanges and transmission buildings and equipment, and outdoor telephone booths and pedestals.

Water filtration plants, wells, pumping stations and reservoirs. (Ord. G-60, 3-22-1966; Ord. G-1163, 4-28-2020)

13-7 D-2: SPECIAL USES:

Accessory uses and structures.

Bus turnarounds and passenger shelters.

Daycare center, provided such facility complies with all licensing requirements of the state and maintains a direct alarm hookup to the Oak Brook police department.

Farmers' markets and/or French markets involving the sale of flowers, culinary accessories and edible items for consumption off the premises where the sale is made provided that the following conditions are met:

A. Sale of used or preowned items is not permitted.

B. Farmers' market and/or French market may be conducted no more than one day per week on any property zoned for business purposes.

C. All signage and setback requirements of the underlying zoning district must be met.

D. The property on which the farmers' market and/or French market is conducted complies with all the parking requirements of the underlying zoning district or, in the alternative, the petitioner demonstrates that notwithstanding any temporary noncompliance, the conduct of the event will not impose any undue traffic or parking burden on surrounding properties and streets; and

E. The farmers' market and/or French market is approved by the Development Services department ~~of community development~~ upon application and submittal of all required information from the property owner detailing prospective compliance with the conditions herein.

Offices, business and professional, occupying less than fifty percent (50%) of the total floor area of a structure over five (5) stories in height, and when located on floors below those used for dwelling purposes.

Outdoor ATM (automated teller machine) walk-up or drive-thru

Sewage and stormwater lift stations.

Water filtration plants, wells, pumping stations and reservoirs. (Ord. G-60, 3-22-1966; Ord. G-454, 10-9-1990; Ord. G-915, 1-12-2010)

13-7 D-3: LOT AREA REQUIREMENTS:

A. Floor Area Ratio: Not to exceed 0.6.

B. Yards:

1. Front: Not less than one hundred feet (100').

2. Side Yards And Courts:

a. Two (2) side yards each not less than ten feet (10'), plus one foot (1') for each one foot (1') in height that a structure exceeds twenty seven feet (27'), in height except a side yard adjoining a street shall be not less than fifty feet (50').

b. Where a building wall more than thirty feet (30') in length faces an interior side lot line, the interior yard as required in this article shall be increased in depth by one foot (1') for

each one foot (1') such wall exceeds thirty feet (30') in length, or not more than twenty seven feet (27'), whichever is less.

c. Where the walls of one or more structures face upon a court, the depth and length of the court shall be as approved by the board of trustees after receiving recommendations of the plan commission.

3. Rear: Not less than forty feet (40') in depth.

4. Yards Adjoining Residence District: Any yard adjoining a residence district and a structure within the B4 hotel-office district shall be not less than one hundred feet (100') in depth.

5. Yards Adjoining 22nd Street And York Road: Not less than one hundred feet (100') in depth.

C. Height: Not more than five (5) stories.

D. Lot Width: Not less than two hundred feet (200'). (Ord. G-60, 3-22-1966)

13-7 D-4: ADDITIONAL REGULATIONS:

A. Awnings, Marquees And Signs: See chapter 11 of this title.

B. Off Street Parking And Loading: Off street parking and loading shall be as provided in chapter 12 of this title. (Ord. G-60, 3-22-1966; Ord. G-695, 3-26-2002)

CHAPTER 8
HISTORIC GRAUE MILL GATEWAY AREA

SECTION:

13-8-1 : Findings

13-8-2 : Graue Mill Gateway Area Established

13-8-3: Intent And Purpose

13-8-4 : Definitions

13-8-5 : Applicability

13-8-6 : Certificate Of Appropriateness

13-8-7: Gateway Development Plan

13-8-8: Additional Requirements Of Gateway Development Plan

13-8-9: Action By Governmental Bodies

13-8-10: Implementation Of Gateway Development Plan

13-8-11: Exceptions To Plan Procedures

13-8-12: Procedure For Single-Family Detached Residences

13-8-1 : FINDINGS:

A. The area around the Graue Mill is a unique area with special cultural significance and character different from similarity zoned properties in the Village and includes historic structures: the Graue Mill, the old St. John Church and the Fred Graue residence, which structures are hereby designated to be historically significant.

B. The preservation and development of this area require additional rules and regulations supplementing existing ordinances in order to specifically address the unique character of that area.

C. The Historic Graue Mill Gateway Area includes all that property within the boundaries as shown on the map and legal description labelled Exhibit "A", attached to Ordinance G-272 on file in the office of the Village Clerk. Such map and legal description are hereby incorporated herein and made a part hereof by reference.

D. A public hearing has been held pursuant to notice to property owners in the area of the Historic Graue Mill Gateway Area on February 2, 1980, before the Zoning Board of Appeals of the Village, pursuant to due and appropriate notice published in the Oak Brook Doings on January 17, 1980.

E. The creation of the Historic Graue Mill Gateway Area and rules and regulations regarding the development therein is consistent with the comprehensive plan of the Village of Oak Brook.

F. The Village of Hinsdale has passed on October 7, 1980, a similar ordinance so that the character of this area can be preserved in both Villages. This joint effort of the two (2) Villages is consistent with and in accordance with the provisions of section 10 of article VII of the Illinois Constitution relating to intergovernmental cooperation. (Ord. G-272, 11-11-1980)

13-8-2 : GRAUE MILL GATEWAY AREA ESTABLISHED:

The Historic Graue Mill Gateway Area is hereby established with the boundaries as set forth in Exhibit "A", attached to Ordinance G-272, made a part of this Chapter by reference, and on file in the office of the Village Clerk. The provisions of this Chapter shall apply to the erection, construction, alteration or repair of any building or structure in the said area and no building permits shall be issued for any such work except as provided herein. (Ord. G-272, 11-11-1980)

13-8-3 : INTENT AND PURPOSE:

The provisions of this Chapter are intended to order and control growth within the area described as the Historic Graue Mill Gateway Area, hereinafter sometimes referred to as "area", and for the additional purposes:

A. To promote the public health, safety, morals, comfort and general welfare of the citizens of said area.

B. To enhance the values of property throughout the said area.

C. To encourage and foster development in the area consistent with the Graue Mill, its site and the historic period it represents.

D. To encourage and promote the attractiveness, cohesiveness and compatibility of new buildings, development, remodeling, and additions so as to maintain and improve established standards of property values within the area consistent with its historical character.

E. To encourage and promote the preservation of historical structures, buildings and natural resources including the Graue Mill, the old St. John Church and the Fred Graue residence. (Ord. G-272, 11-11-1980)

13-8-4 : DEFINITIONS:

For purposes of this Chapter the following words and terms shall have the respective meanings:

ARCHITECTURAL CHARACTER: The composite or aggregate of the characteristics of structure, form, materials, and function of a building, group of buildings, or other architectural composition.

ARCHITECTURAL CONCEPT: The basic aesthetic idea of a building, or group of buildings or structures, including the site and landscape development, which produces the architectural character.

AREA: The Historic Graue Mill Gateway Area.

CERTIFICATE OF APPROPRIATENESS: A statement issued by the President and Board of Trustees of the Village that a gateway development plan meets the intent and purpose of the Historic Graue Mill Gateway Area which permits the applicant to build in accordance with the statement.

EXTERIOR BUILDING COMPONENT: An essential and visible part of the exterior of a building.

GATEWAY DEVELOPMENT PLAN: Those documents, drawings, and plans, including the site plan and landscape plan, as referred to in Sections 13-8-7 and 13-8-8 of this Chapter.

SCREENING: Structure or plantings which conceals from view from public ways the areas behind such structure or plantings.

STREET HARDWARE: Objects other than buildings, structures and plantings located in streets and public ways and outside of buildings. Examples are: lamp posts, utility poles, traffic lights, traffic signs, benches, litter containers, planting containers, letter boxes, fire hydrants.

STREETSCAPE: The scene as may be observed along a public street or way composed of natural and manmade components including buildings, paving, plantings, street hardware, and miscellaneous structures.

VILLAGE: The Village of Oak Brook, Illinois. (Ord. G-272, 11-11-1980)

13-8-5 : APPLICABILITY:

The provisions of this Chapter shall be in addition to and not in derogation of any provisions of the zoning ordinance of the Village; provided, however, that where any provision of the said zoning ordinance may conflict with a provision of this Chapter, the more restrictive provisions shall apply. (Ord. G-272, 11-11-1980)

13-8-6 : CERTIFICATE OF APPROPRIATENESS:

A. Required: No building permit or other permit otherwise required under the ordinances of the Village for the erection, construction, exterior alteration or repair of any building or structure in the Historic Graue Mill Gateway Area shall be issued by the Director of ~~Community~~ Development Services except upon the issuance of a certificate of appropriateness by the President and Board of Trustees. Such certificate of appropriateness

may only be issued after a public hearing has been held before the Plan Commission of the Village in accordance with the public hearing procedures set forth herein and after the President and Board of Trustees of the Village approve the gateway development plan for the property involved.

B. Application And Hearing: Upon the filing of an application for a building permit for which a certificate of appropriateness is or may be required, the applicant shall concurrently file with the Village Clerk an application for a certificate of appropriateness, which application shall include all the information and material required pursuant to Sections 13-8-7 and 13-8-8 of this Chapter. Such application shall be referred to the plan commission by the president and board of trustees upon verification of the completeness of said application. The fact that an application for a certificate of appropriateness has been filed shall not be cause for the ~~d~~Director of ~~community d~~Development Services to delay the review of plans relating to the building and zoning aspects of the project while said application is pending. The plan commission shall thereupon fix a reasonable time, within forty five (45) days, for a hearing and give a written five (5) day notice thereof to the applicant. Upon such hearing the commission shall consider the application for a certificate of appropriateness and, if necessary, receive additional evidence (such as exterior elevation renderings) from the applicant or his agent or attorney and from the village personnel or other persons as to whether the external architectural features of the proposed building or structure comply with the provisions of this chapter. All testimony given at such hearing shall be under oath. (Ord. G-272, § 1, 11-11-1980)

13-8-7 : GATEWAY DEVELOPMENT PLAN:

The gateway development plan must be appropriate to the development of the area consistent with its historic character and shall provide detailed information in regards to the following:

A. Relationship Of Proposed Buildings Or Structures To Site And Adjoining Area: The site shall be planned to accomplish a desirable transition with the streetscape, and to provide for adequate planting, pedestrian movement, and parking areas, and shall be evaluated pursuant to the following criteria:

1. The provision, where practical, of setbacks in excess of zoning restrictions to provide an interesting relationship between buildings;

2. The treatment of parking areas with decorative elements, building wall extensions, plantings, berms or other innovative means so as to screen parking from view;

3. The underground installation of newly installed utility services, and service revisions necessitated by exterior alterations.

B. Building Design: Evaluation of the appearance of a project shall be based on the following criteria:

1. The quality of the design and its relationship to the Graue Mill, its site, and the historic period it represents;

2. The compatibility of the design, arrangement, texture, and materials of the proposed buildings or structures with the intent and purpose of the area;

3. The screening and location of mechanical equipment or other utility hardware on roof, ground, or buildings from public view with materials harmonious to the building, so as not to be visible from any public ways;

4. The unobtrusiveness and harmoniousness of exterior lighting and the compatibility of fixtures, standards, and all exposed accessories with the building design.

C. Street Hardware And Signs: See chapter 11 of this title.

D. Landscaping Design Considerations: Landscape treatment shall be provided to enhance architectural features and provide shade and screening, and shall be evaluated pursuant to the following criteria:

1. The compatibility of the design and size of all landscaping effects with the building or structure and adjacent areas;

2. The preservation, protection and development of existing topographic patterns and plant materials which contribute to the beauty and utility of a development;

3. Where building sites limit plantings, the placement of trees in the parkway or paved areas. Parkway trees shall be of a minimum three inch (3") caliper. Buildings of three (3) stories or more shall have parkway and front and/or side yard trees of a minimum of five inch (5") caliper;

4. The method of screening of service yards, and other places which tend to be unsightly, by fencing, plantings, or a combination of these. Screening shall be equally effective in all seasons and may be accomplished by use of any combination of walls, fencing or plantings;

5. The enhancement of parking areas and traffic ways with landscaped spaces containing trees and tree groupings and low shrubs or ground cover;

6. The use of unobtrusive exterior lighting to enhance the landscaping;

7. The use of landscaping materials and lighting which have low demand for annual maintenance.

E. Landscape Plan: A detailed landscape plan shall show:

1. Location of existing plant materials to remain and those to be removed;

2. Designation of parkway "street trees". Existing parkway trees shall be preserved and protected during construction;

3. Scientific (genus-species) and common names of proposed landscape material and proposed quantities and sizes of same;

4. Landscape materials other than plant materials shall be designated in detail.

The landscape plan shall be prepared by a landscape architect or qualified nurseryman in accordance with the criteria set forth in subsection D of this section. The plan shall be signed and dated by the designer.

F. Site Plan: A detailed site plan shall show:

1. Exact location of the building(s) or structure(s) on the site;

2. Exact location of drives, walks, parking areas, parking layout, freestanding or retaining walls, fences, and drainage accommodations;

3. Elevations showing all sides of the proposed structure. Elevations should indicate the type of materials to be used on the structure as well as their proportions;

4. Existing grades or topographic details to be retained and proposed grading;

5. Location of utilities. (Ord. G-272, 11-11-1980; Ord. G-695, 3-26-2002)

13-8-8 : ADDITIONAL REQUIREMENTS OF GATEWAY DEVELOPMENT PLAN:

In addition to the information required pursuant to subsection 13-8-7F of this chapter, the following requirements must be met prior to the issuance of a certificate of appropriateness:

A. Visual Environment: In order to ensure an adequate and pleasant natural environment, a sum of money equal to not less than five percent (5%) of the total project construction cost, as set forth on the approved building permits, shall be budgeted and used by the owners and developers to purchase and install mature sized trees, shrubbery, grass and other suitable landscaping upon the grounds, which budgeted amount shall be expended to comply with the provisions of subsections 13-8-7D and E of this chapter. The president and board of trustees may vary from or waive the requirement for such expenditure where such expenditure would cause a hardship on the applicant. Hardship, for purposes of this chapter shall include, but not be limited to, the following situations:

1. Irregular shaped lots where landscaping is not practical;

2. Lots with minimal frontage;

3. Development does not cause any visual impact; e.g., development to the rear of a lot or building; and

4. Those instances where there is an abundance of existing natural vegetation precluding the necessity for further landscaping treatment.

B. Public Utilities: All utility lines, including, but not limited to, telephone and electric, in the right of way adjacent to and in the development property shall be placed underground. Underground utility lines shall be placed within easements or dedicated public ways in a manner which will not conflict with other underground services. All transformer boxes and service posts shall be located so as not to be unsightly or hazardous. (Ord. G-272, 11-11-1980)

13-8-9 : ACTION BY GOVERNMENTAL BODIES:

A. Plan Commission: Prior to making its decision the commission may make recommendations to the applicant as to changes in the exterior drawings, sketches, landscaping, site plans and materials which in the judgment of the commission would tend to effect the general purposes of this chapter. The commission shall make its decision within fifteen (15) days after the hearing is closed and shall issue to the president and board of trustees its findings and recommendation concerning the proposed gateway development plan. If the plan commission recommends denial of a gateway development plan it shall specifically point out such deficiency in its findings.

B. Corporate Authorities: The village president and board of trustees may approve or disapprove the proposed gateway development plan or refer the matter back to the plan commission for further consideration. Upon approval of any proposed gateway development plan the president and board of trustees shall issue a certificate of appropriateness as to the approved gateway development plan. (Ord. G-272, 11-11-1980)

13-8-10 : IMPLEMENTATION OF GATEWAY DEVELOPMENT PLAN:

Upon granting of a certificate of appropriateness, the gateway development plan, including the exterior drawings, sketches, landscape and site plans, renderings and materials upon which said certificate was granted, shall be referred to the director of community development, whose responsibility it shall be to determine, from time to time as the project is in progress and upon its completion, that there have been no unauthorized deviations from the gateway development plan upon which the granting of the certificate of appropriateness was based. (Ord. G-272, 11-11-1980)

13-8-11 : EXCEPTIONS TO PLAN PROCEDURES:

The requirements of this chapter for submission and approval of a gateway development plan and the issuance of a certificate of appropriateness shall not be applicable to:

A. Renovation, restoration and preservation of structures designated by the president and board of trustees as historically or culturally significant;

B. Ordinary repairs or interior renovations;

C. Renovations or additions to existing single-family detached residential buildings or structures accessory thereto. (Ord. G-272, 11-11-1980)

13-8-12 : PROCEDURE FOR SINGLE-FAMILY DETACHED RESIDENCES:

Where a certificate of appropriateness is required, pursuant to subsection 13-8-6A of this chapter, for the construction of any single-family detached residence, the requirements of subsections 13-8-7D, E and 13-8-8A of this chapter shall not be applicable. (Ord. G-272, 11-11-1980)

CHAPTER 10
OFFICE-RESEARCH-ASSEMBLY DISTRICTS

SECTION:

13-10-1 : Prohibited Uses

13-10-2 : Uses Enclosed

13-10-3 : Performance Standards

13-10-4: Outdoor Dining Areas

13-10-1 : PROHIBITED USES:

A. ~~Industrial:~~ No lot shall be used, and no structure shall be erected, altered or remodeled for any of the following uses: abattoirs; arsenals; crematories; creosote treatment or manufacture; fat rendering; fertilizer manufacture; fireworks manufacture or storage; dumping or reduction of garbage, dead animals, offal, or refuse; ore reduction; petroleum processing or refining; pyroxylin manufacture; gutta percha manufacture or treatment; saltworks; sauerkraut manufacture; smelters; stockyard or slaughter of or experimentation with animals or fowl; tallow, grease, or lard manufacture or treatment; tanning, curing, or storage of rawhides or skins; tar distillation or manufacture; cement, concrete, or asphaltic concrete, mortar or plaster batch mixing plants; or junkyard or other uses having operations that are deemed by the board of trustees to be incompatible with the intended environmental character of the ORA office-research-assembly district, except clinical testing of animals of the rodent family or domesticated fowl is permitted if conducted within a separate room or rooms not to exceed two thousand (2,000) square feet of gross floor area which is part of a building used for research.

B. Explosives: No activities involving the storage, utilization, or manufacture of materials or products which decompose by detonation shall be permitted, except such as are specifically licensed by the village. Such materials shall include, but shall not be confined to, all primary explosives such as lead azide, lead styphnate, fulminates and tetracene; all high explosives such as TNT, RDX, HMX, PETN and pectic acid, propellants and components thereof such as nitrocellulose, black powder, boron hydrides, hydrazine and its derivatives; pyrotechnics and fireworks such as magnesium powder, potassium chlorate and potassium nitrate; blasting explosives such as dynamite and nitroglycerin; unstable organic compounds such as acetylides, tetrazoles, perchloric acids; perchlorates, chlorates, hydrogen peroxide in concentrations greater than thirty five percent (35%); and nuclear fuels, fissionable materials and products, and reactor elements such as uranium 235 and plutonium 239. (Ord. G-60, 3-22-1966; Ord. G-119, 5-12-1970)

13-10-2 : USES ENCLOSED:

All business, service, research, merchandise display and manufacturing activities and operations shall be conducted wholly within completely enclosed buildings except off street parking, off street loading, outdoor dining areas adjacent to restaurants and open sales lots and drive-in facilities in districts where they are permitted. (Ord. G-60, 3-22-1966; Ord. G-758, 8-24-2004)

13-10-3 : PERFORMANCE STANDARDS:

Any use established in the ORA1, ORA2 or ORA3 office-research- assembly districts shall be operated so as to comply with the performance standard regulations prescribed in this section, and no use lawfully established on the effective date hereof shall be hereafter altered or modified so as to conflict with, or further conflict with, such performance standards.

A. Noise: See section 13-3-10 of this title for performance standards pertaining to sound levels.

B. Vibration: Any operation or activity which shall cause at any time and at any point beyond the boundaries of the lot, earthborne vibrations other than background vibrations produced by some source not under control of this chapter, such as the operation of motor vehicles or other transportation facilities in excess of the limits set forth in the following column I is prohibited. In addition, any operation or activity which shall cause at any time and at any point in a residence district earthborne vibrations in excess of the limits set forth in the following column II is prohibited. Vibration shall be expressed as displacement in inches and shall be measured with a three (3) component measuring system approved by the ~~d~~Director of~~-community d~~Development Services.

Frequency In Cycles Per Second	I Displacement In Inches	II Displacement In Inches
0 to 10	0.0008	0.0004
10 to 20	0.0005	0.0002
20 to 30	0.0002	0.0001
30 to 40	0.0002	0.0001
40 and over	0.0001	0.0001

Impact vibrations which are discrete pulses that do not exceed one hundred (100) impulses per minute shall be permitted twice the displacements shown above in columns I and II.

C. Smoke And Particulate Matter:

1. The emission of smoke or particulate matter in such manner or quantity as to be detrimental to or endanger the public health, safety, comfort, or welfare is hereby declared to be a public nuisance and shall henceforth be unlawful.

2. For the purpose of grading the density or equivalent capacity of smoke, the Ringelmann chart described in the bureau of mines information circular 6888 shall be employed. The emission of smoke or particulate matter of a density or equivalent greater than no. 1 on the Ringelmann chart is prohibited at all times except as otherwise provided hereinafter.

3. The emission of smoke or particulate matter of a density greater than Ringelmann no. 3 is permitted once in any twenty four (24) hour day for no more than three (3) minutes.

4. Wind generated dust from such sources as storage areas, yards, roads, and so forth, within lot boundaries shall be minimized by appropriate landscaping or all weather paving.

5. The emission of particulate matter from any chimney, stack, or vent shall not exceed one-fourth (1/4) pound per hour per acre of lot area.

D. Toxic Matter: No use shall discharge beyond the boundaries of the lot toxic matter in such concentrations as to be detrimental to, or endanger the public health, safety, comfort or welfare, or cause injury or damage to property or business.

E. Odors: The emission of odorous matter in excess of the odor threshold measured beyond the boundaries of the lot at ground level or at habitable elevation is prohibited.

F. Fire And Explosion Hazard:

1. The storage, utilization, or manufacture of solid materials ranging from incombustible to moderate burning is permitted.

2. The storage or utilization of solid materials ranging from free or active burning to intense burning is permitted provided the following conditions are met:

a. The materials shall be stored or utilized within completely enclosed buildings or structures having incombustible exterior walls and handled in accordance with the standards and regulations of the village and the National Fire Protection Association.

b. All such buildings shall be set back at least forty feet (40') from all lot lines or, in lieu thereof, shall be protected throughout by an automatic fire extinguishing system installed in accordance with the standards and regulations of the village and the National Fire Protection Association.

c. Said materials, if stored outdoors, shall be no closer than one hundred fifty feet (150') to the nearest lot line in conformance with the standards and regulations of the village and the National Fire Protection Association.

3. The storage or utilization of flammable liquids or materials which produce flammable or explosive vapors shall be permitted in accordance with the following limitations, exclusive of storage in underground tanks, and storage of finished products in original sealed containers:

a. Said materials or products shall be stored or utilized within completely enclosed buildings having incombustible exterior walls, and handled in accordance with the standards and regulations of the village and the National Fire Protection Association and, in addition, all such buildings shall be set back at least forty feet (40') from all lot lines and shall be protected throughout by an automatic fire extinguishing system installed in accordance with the standards and regulations of the village and the National Fire Protection Association.

b. The aboveground storage of flammable liquids in excess of the following quantities shall not be permitted:

Closed Cup Flash Point	Quantity (Gallons)
Less than 24°F	1,000
24°F to less than 105°F	2,000
105°F to less than 187°F	5,000
187°F and higher	10,000

c. The total of all flammable liquids permitted on any lot shall not exceed ten thousand (10,000) gallons.

G. Glare And Heat: Any operation producing glare or heat shall be performed within a completely enclosed building in such manner as not to create a public nuisance or hazard beyond the boundaries ofthe lot.

H. Radiation Hazards:

1. The release of radioactive gases and particulate matter shall not exceed the maximum allowable concentration permitted the general population of applicable federal, state and local laws and regulations when measured at or beyond the lot line at ground level or habitable elevation.

2. No activity involving radiation hazards shall be permitted which causes exposure to persons at or beyond the lot lines in excess of the maximum allowable permitted the general population in applicable federal, state and local laws and regulations. (Ord. G-60, 3-22-1966; Ord. G-233, 5-31-1978; Ord. G-863, 7-22-2008)

13-10-4 : OUTDOOR DINING AREAS:

A. For the purposes of this section, "outdoor dining areas" are defined as the use of an adjacent, outside area by a restaurant for the same eating and drinking activities that occur within the restaurant.

B. The following regulations shall apply to outdoor dining areas:

1. The location of any outdoor dining area comply with all setback requirements in the applicable zoning district and shall not obstruct pedestrian or vehicular traffic. A minimum of five feet (5') of sidewalk clearance shall be maintained at all times for pedestrian travel;

2. Any outdoor dining area be under the direct supervision and control of the principal restaurant, and such dining area be enclosed by a fence or other protective safety barrier which shall be constructed to clearly delineate the boundaries of the area and to protect the health and safety of restaurant patrons and the general public;

3. The hours of operation of any outdoor dining area be within the normal operating hours of the principal restaurant;

4. There shall be no live entertainment in the outdoor dining area;

5. Plans shall be provided delineating the location of the outdoor dining area, and such location be approved by the Building Official as part of a building permit. The outdoor dining area shall be maintained in compliance with the approved plans;

6. The principal restaurant and outdoor dining area shall be in compliance with all the requirements of this code and all other applicable rules and regulations of any other governing agency including the DuPage County Health Department regarding restaurant and outdoor dining areas. (Ord. g-1163,4-24-2020)

ARTICLE A. ORA1 OFFICE-RESEARCH-ASSEMBLY DISTRICT

SECTION:

13-10A-1: Permitted Uses

13-10A-2: Special Uses

13-10A-3: Lot Area Requirements

13-10A-4: Additional Regulations

13-10A-1: PERMITTED USES:

Accessory uses and structures, including storage and service areas within the structures, garages for delivery trucks, central heating and air conditioning plants, and storage areas, yards, shops and similar facilities that are used solely for operating, servicing or maintaining

the activities and improvements within the lot on which the accessory use is located. Accessory uses and structures shall also include dwellings occupied by watchmen, janitors, maintenance and similar employees engaged upon the premises; but no dwellings shall be erected for any other purposes.

Any establishment, the principal use of which is manufacturing, fabricating, processing, assembly, repairing, storing, cleaning, servicing or testing of materials, goods or products, provided that operations conform with performance standards and other requirements of this title.

Churches, on lots not less than four (4) acres in area.

Data Centers

Electric distribution centers and substations.

Gas regulator stations.

Offices and financial institutions. (Ord. G-60, 3-22-1966)

13-10A-2: SPECIAL USES:

Clinics, medical and dental, including accessory laboratories.

Daycare centers, provided such facility complies with all licensing requirements of the state and maintains a direct alarm hookup to the police department or other emergency dispatch center.

Drive-in banking facilities.

Health clubs, private, membership only, in multibuilding office complexes under single ownership or control on sites not less than ten (10) acres, when such facility is designed primarily for use by tenants of the office complex. Such structure shall not front on any perimeter road, and access thereto shall be provided only from interior roadways.

Heliports (not for freight) shall meet all of the standards as contained in subsection 13-10A-4C of this article.

Hotels.

Outdoor ATM (automated teller machine) walk-up or drive-thru

Parks and open field recreational activities.

Personal service and retail sales uses intended primarily for the use of tenants and having no exterior advertising and accessible only from the lobby or interior of the building, limited to:

Barbershops and beauty parlors.

Drugstores.

Newsstands; newspapers, magazines and other periodicals.

Tobacco shops.

Public utility, governmental service and transportation uses:

Bus turnarounds and passenger shelters.

Emergency warning system structures.

Fire and police stations.

Post office operated by the United States government.

Sewage and stormwater lift stations.

Telephone exchanges, transmission buildings and equipment, and outdoor telephone booths and pedestals.

Water filtration plants, wells, pumping stations and reservoirs.

Radio and television stations and production studios.

Restaurants with accessory cocktail lounges and outdoor dining areas, without facilities for dancing and live entertainment, in multibuilding office complexes under single ownership or control on sites not less than ten (10) acres, when such facility is designed primarily for use by tenants of the office complex. Such structure shall not front on any perimeter road, and access thereto shall be provided only from the interior roadways.

Schools, nonresidential, post baccalaureate school; provided, that not more than twenty percent (20%) of the course offerings may be prerequisite to admission to the post baccalaureate programs. (Ord. G-60, 3-22-1966; Ord. G-131, 5-25-1971; Ord. G-210, 2-8-1977; Ord. G-275, 1-20-1981; Ord. G-305, 9-8-1981; Ord. G-424, 1-24-1989; Ord. G-448, 7-10-1990; Ord. G-471, 8-13-1991; Ord. G-483, 3-10-1992; Ord. G-487, 5-12-1992; Ord. G-536, 7-12-1994; Ord. G-553, 3-14-1995; Ord. G-669, 1-23-2001; Ord. G-724, 7-22-2003; Ord. G-785, 6-28-2005; Ord. G-1163, 4-28-2020)

13-10 A-3: LOT AREA REQUIREMENTS:

A. Floor Area Ratio: Not to exceed 0.48.

B. Structure Height: Not more than five (5) stories or seventy-six feet (76'), whichever is less.

C. Yards:

1. Front: Not less than one hundred feet (100') in depth, except when adjacent to a residence district boundary line not less than one hundred fifty feet (150') in depth;

2. Side: Not less than thirty feet (30') in depth, except: a) that portion of a side yard when abutting a residence district shall not be less than one hundred fifty feet (150') in depth; b) a

side yard abutting a street shall conform in depth to the front yard depth of a contiguous lot abutting on such street; and c) side yards abutting 22nd Street and York Road shall have a depth of not less than one hundred feet (100');

3. Rear: Not less than forty feet (40') in depth, except that portion of a rear yard abutting a residence district shall be not less than one hundred fifty feet (150') in depth, and except that a rear yard abutting an alley or service drive may be reduced by twenty feet (20') in depth;

4. Conservation/Recreation Districts: Notwithstanding anything contained in this title to the contrary, including, without limitation, section 13-3-13 of this title, any yard which is one hundred feet (100') in depth and which is adjacent in its entirety to a conservation/recreation district boundary shall satisfy the applicable yard requirement;

provided, however, that when a developed zoning lot which contains two (2) or more principal buildings is subdivided the yards required along the new lot lines created by the subdivision shall be not less than thirty feet (30') in depth and the depth of all required yards for each lot shall be shown on the subdivision plat; provided, that existing parking stalls and aisles and access and service drives shall be permitted to continue within said yards and within the yards along the boundaries of the original zoning lot required by subsections C1, C2 and C3 of this section, as modified by subsection 13-12-3H of this title; and provided further that upon redevelopment of any part of a lot, other than for resurfacing or for utility replacement, which development requires removal of existing parking stalls or aisles located in whole or in part within areas where such accessory uses are not permitted by said subsections as so modified, no new stalls or aisles shall be constructed in such areas except as permitted by said subsections as so modified, and any landscaping therein required by this title shall be promptly installed and properly maintained. (Ord. G-60, 3-22-1966; Ord. G-135, 5-22-1971; Ord. G-213, 3-22-1977; Ord. G-554, 5-9-1995; Ord. G-557, 7-25-1995; Ord. G-676, 4-10-2001)

13-10 A-4: ADDITIONAL REGULATIONS:

A. Awnings, Marquees And Signs: See chapter 11 of this title.

B. Off Street Parking And Loading: Off street parking and loading shall be as provided in chapter 12 of this title.

C. Heliports 1 :

1. If the federal aviation administration has conducted an aeronautical study to determine the effect of the proposed heliport on the safe and efficient use of the navigable air space by aircraft and find no objection to the proposed heliport.

2. The layout and design of the heliport, including approach and departure paths, shall conform to the most current rules and regulations of the division of aeronautics, state of Illinois, department of transportation. Any approval for a heliport granted by the village shall be subject to evidence that said division of aeronautics has issued an order authorizing the applicant to proceed with construction of the heliport in accordance with plans approved by it; provided, however, that any waiver of such rules and regulations granted by said division

shall be subject to approval by the village. No permit for the construction of a heliport will be given until such an order has been issued by said division.

3. Hours of operation shall be from seven o'clock (7:00) A.M. to ten o'clock (10:00) P.M. Monday through Saturday. The heliport may also be used on Sunday, provided the village is advised seventy-two (72) hours in advance, and said use does not exceed one such use per month.

4. Approach and departure patterns from said heliport shall be limited to avoid operation over residential areas.

5. Refueling, routine maintenance and storage of helicopter, except for emergency purposes only, shall not be permitted at the heliport.

6. There will be no receiving or shipping of freight from said heliport, and there will be no on site storage of fuel.

7. Use of the heliport shall at all times comply with any specific requirements of the federal aviation administration or Illinois department of transportation in the certificate of approval or operation issued to the user of the heliport by such agencies.

8. Special use shall only be applicable to the applicant therefor and only so long as the applicant is occupying the subject property, provided, however, that pursuant to a special use permit application identifying a specific user occupying property adjacent to the subject property, the special use also may be made applicable to such user for so long as such user occupies adjacent property.

9. The applicant shall maintain at all times appropriate and sufficient insurance coverage relative to the installation and use of the heliport insuring against any property damage or personal injury arising therefrom with policy limits of not less than twenty million dollars ($20,000,000.00).

10. All such special uses shall be reviewed by the village every five (5) years for conformance with the conditions set forth herein, character of safety and extent of operations and any further relevant factors.

11. Helicopters utilizing a heliport shall fly at the maximum safe level prior to entering the approach pattern to the heliport.

12. Use of the heliport shall be made available to the village or its designees for emergencies.

13. A log of usage shall be submitted to the village on an annual basis, or as otherwise required by the village. (Ord. G-60, 3-22-1966; Ord. G-82, 4-9-1968; Ord. G-178, 12-9-1975; Ord. G-305, 9-8-1981; Ord. G-471, 8-13-1991; Ord. G-553, 3-14-1995; Ord. G-695, 3-26-2002)

Notes

1 1. See section 13-10A-2 of this article, heliports as a special use.

ARTICLE B. ORA2 OFFICE-RESEARCH-ASSEMBLY DISTRICT

SECTION:

13-10B-1: Permitted Uses

13-10B-2: Special Uses

13-10B-3: Lot Area Requirements

13-10B-4: Additional Regulations

13-10B-1: PERMITTED USES:

Accessory uses and structures, including storage and service areas within the structures, garages for delivery trucks, off street parking, central heating and air conditioning plants, and storage areas, yards, shops, and similar facilities that are used solely for operating, servicing, or maintaining the activities and improvements within the district. Accessory structures and uses shall also include dwellings occupied by watchmen, janitors, maintenance and similar employees engaged upon the premises; but no dwelling shall be erected for any other purpose.

Permitted uses as allowed in the B2 regional shopping center district.

Permitted uses as allowed in the ORA1 office-research-assembly district. (Ord. G-60, 3-22-1966; Ord. G-758, 8-24-2004)

13-10B-2: SPECIAL USES:

Daycare centers, provided such facility complies with all licensing requirements of the state and maintains a direct alarm hookup to the police department or other emergency dispatch center.

Drive-in establishments for retail banks and freestanding restaurants.

Heliports (not for freight) shall meet all of the standards as contained in subsection 13-10A-4C of this chapter.

Nonresidential, postbaccalaureate schools.

Outdoor ATM (automated teller machine) walk-up or drive-thru

Public utility, governmental service and transportation uses:

Bus turnarounds and passenger shelters.

Fire and police stations.

Sewage and stormwater lift stations.

Telephone exchanges, transmission buildings and equipment, and outdoor telephone booths and pedestals.

Water filtration plants, wells, pumping stations and reservoirs. (Ord. G-980, 9-25-2012; Ord. G-1163, 4-28-2020)

13-10 B-3: LOT AREA REQUIREMENTS:

A. Floor Area Ratio: Not to exceed 1.2 for office uses, financial uses and accessory uses thereto; 0.8 for other uses permitted in the ORA1 district; and 0.3 for uses as permitted in the B2 regional shopping district.

B. Structure Height: Not more than twelve (12) stories or one hundred seventy four feet (174'), whichever is less.

C. Yards:

1. Front: Not less than one hundred feet (100') in depth, except when adjacent to a residence district boundary line not less than one hundred fifty feet (150') in depth, provided that required front yards may be occupied by drives, sidewalks, landscaping and similar facilities.

2. Side: Not less than thirty feet (30') in depth, except: a) that portion of a side yard abutting a residence district shall be not less than one hundred fifty feet (150') in depth; b) a side yard abutting a street shall be not less than fifty feet (50') in depth; c) each interior side yard shall be increased by not less than one foot (1') for each one foot (1') of structure height over thirty two feet (32'); and d) side yards abutting 22nd Street and York Road shall have a depth of not less than one hundred feet (100'), provided that required side yards may be occupied by drives, vehicular parking, sidewalks, landscaping, and similar facilities provided that paved parking areas shall not be located closer than forty feet (40') to any lot in a residence district.

3. Rear: Not less than twenty feet (20') in depth, except that portion of a rear yard abutting a residence district shall be not less than one hundred feet (100') in depth, provided that required rear yards may be occupied by drives, vehicular parking, sidewalks, landscaping and similar facilities provided that paved parking areas shall not be located closer than forty feet (40') to any lot in a residence district. (Ord. G-60, 3-22-1966; Ord. G-213, 3-22-1977; Ord. G-557, 7-25-1995; Ord. G-758, 8-24-2004)

13-10 B-4: ADDITIONAL REGULATIONS:

A. Awnings, Marquees And Signs: See chapter 11 of this title.

B. Off Street Parking And Loading: Off street parking and loading shall be as provided in chapter 12 of this title. (Ord. G-60, 3-22-1966; Ord. G-695, 3-26-2002)

ARTICLE C. ORA3 OFFICE-RESEARCH-ASSEMBLY DISTRICT

SECTION:

13-10C-1: Purpose

13-10C-2: Permitted Uses

13-10C-3: Special Uses

13-10C-4: Lot Area Requirements

13-10C-5: Additional Regulations

13-10C-6: Procedures

13-10 C-1: PURPOSE:

The ORA3 district is designed to permit and encourage orderly and attractive site planning in accordance with an overall design which provides for the preservation of natural site qualities, a high proportion of open space, and an arrangement of land uses and physical features into a harmonious design compatible with the surrounding area. It is intended that an area may be classified as an ORA3 district only when the following conditions are met:

A. Not less than fifty percent (50%) of the property shall be permanently devoted to open space which shall consist of planted areas (including planted surfaces of parking decks), forests, lagoons, watercourses, storm water swales and retention areas, pedestrian, bicycle, and bridle paths and walkways, with the maximum practicable retention of forests and other natural vegetation.

B. All buildings and parking, and other structures to the extent practical, will be substantially screened from public view from public streets and streets privately owned and maintained in residential developments in accordance with a landscaping plan to be submitted for approval bythe village.

C. All roads and bridges will be retained in private ownership and constructed to meet village standards and maintained by the owner without cost to the village.

D. All access to and from the property can be constructed and maintained so that substantially all traffic generated will use commercial thoroughfares. (Ord. G-60, 3-22-1966)

13-10C-2: PERMITTED USES:

The following are permitted uses within the ORA3 district, but only to the extent that each such use is in accordance with an approved Planned ~~d~~Development ~~plan~~:

Accessory uses and structures including the following:

Central heating and air conditioning plants.

Daycare centers, provided such facility complies with all licensing requirements of the state and maintains a direct alarm hookup to the police department or other emergency dispatch center.

Limited retail and service facilities.

Living quarters (not in separate residential buildings) solely for occupancy of watchmen, janitors, maintenance, and similar employees (and their families) employed in connection with the maintenance and security of the property and improvements thereon.

Lodging facilities (together with restaurant and accessory cocktail lounge) for the transient use of employees of the owner, its subsidiaries, affiliates, franchisees, and other business invitees.

Nonpublic meeting and conference facilities.

Private recreational use, such as tennis courts, putting greens, swimming pools, bowling alleys, racquetball courts, baseball diamonds, stables, bridle paths, and health facilities.

Public utility and transportation uses, such as:

Bus turnarounds and passenger shelters;

Electric distribution stations solely for serving the development;

Outdoor telephone booths;

Sewerage and storm water lift stations;

Wells and reservoirs.

Radio and television production studios.

Research and development facilities.

Storage, service, and maintenance buildings and areas.

Temporary buildings for construction purposes and construction equipment storage areas, for a period not to exceed thirty (30) days following completion of construction.

Hotels.

Office, business and professional; provided, however, that following completion of any phase and for five (5) years thereafter not more than thirty three percent (33%) of the office space

shall be occupied by persons other than employees or business invitees of either: a) the owner, its successors or subsidiaries or affiliated corporations thereof, or joint venturers or partners of the owner; or b) tenants who are suppliers for or consultants to the owner.

Restaurants (which may include musical entertainment and dancing, cocktail lounges and tearooms) and outdoor dining areas (as described in section 13-10-4). (Ord. G-60, 3-22-1966; Ord. G-447, 4-24-1990; Ord. G-558, 7-25-1995; Ord. G-696, 6-11-2002; Ord. G-1163, 4-28-2020)

13-10C-3: SPECIAL USES:

Heliport (not for freight), shall meet all of the standards as contained in subsection 13-10A-4C of this chapter and may be located on a roof of a building of four (4) stories or less.

Not for profit, noncommercial performing and fine arts center.

Schools of music, fine arts, dance, theater, and other arts. (Ord. G-60, 3-22-1966; Ord. G-305, 9-8-1981)

13-10 C-4: LOT AREA REQUIREMENTS:

A. Lot Area: Not less than twenty four (24) acres.

B. Floor Area Ratio:

1. Not to exceed 0.44 for permitted and accessory uses;

2. Not to exceed 0.01 for special uses.

C. Open Space:

1. Not more than twenty four percent (24%) of the property shall be covered by buildings, including parking structures.

2. Not less than fifty percent (50%) of the property shall be "open space" as defined in subsection 13-10C-1A of this article.

D. Structure Height: Not to exceed thirty five feet (35') or three (3) stories, whichever is less; provided, however, that parking structures may be above that height but shall not exceed the lesser of four (4) stories or forty feet (40') unless located within an office building structure; and that up to forty five percent (45%) of the total permitted office floor area may be above that height but shall not exceed the lesser of six (6) stories or seventy five feet (75'); and up to ten percent (10%) of the total permitted lodging facilities floor area may be above that height, but shall not exceed the lesser of five (5) stories or sixty feet (60').

E. Yards: No structure other than signs as provided for in subsection 13-10C-5A of this article, shall be erected or maintained within one hundred feet (100') from any boundary of said property, except that said area may be occupied by drives, vehicular parking, sidewalk,

landscaping, gatehouse entrance treatment and similar facilities, except that paved parking areas shall not be located on required yards adjacent to public streets or within forty feet (40') of all other boundary lines. (Ord. G-60, 3-22-1966; Ord. G-558, 7-25-1995)

13-10 C-5: ADDITIONAL REGULATIONS:

A. Signs: See chapter 11 of this title.

B. Off Street Parking And Loading: Off street parking and loading shall be as provided in chapter 12 of this title, except that if the approved Planned ~~d~~Development ~~plan~~ shall reserve enough land area to satisfy the full requirements of chapter 12 of this title, then only sixty percent (60%) of the required parking for any phase of the development need be developed until and unless the village determines that the existing parking is inadequate. At such time, the owner shall construct additional parking spaces as required by chapter 12 of this title up to one hundred percent (100%). An amount equal to twenty percent (20%) of the parking provided for the development shall be located in an office building and/or in underground parking facilities decked over with architectural landscaping. (Ord. G-60, 3-22-1966; Ord. G-447, 4-24-1990; Ord. G-558, 7-25-1995; Ord. G-695, 3-26-2002)

13-10C-6: PROCEDURES FOR PLAN APPROVAL IN THE ORA-3:
Requires a Planned Development (See Chapter 15 of this Title)

~~A. The applicant shall concurrently file with the village clerk:~~

~~1. An application for rezoning of the property to an ORA3 office-research-assembly district classification; and~~

2. An application for approval of a proposed ~~development plan~~ Planned Development.

~~B. Such applications shall be processed in the manner provided in section 13-14-8 of this title.~~

~~C. The proposed development plan shall include the following:~~

~~1. A statement as to the following:~~

~~a. The period of time expected to be required to implement the development plan Planned Development, and each development phase necessary or desirable for full implementation thereof.~~

~~b. The total acreage allocated for each principal and accessory use, including, but not limited to, open space, office and other buildings and structures, parking and other accessory uses.~~

~~c. The conditions and limitations relating to the development of the property.~~

~~2. A plat setting forth graphically on a scaled drawing drawn to a scale not smaller than one hundred feet to one inch (1" = 100'), which shall include the following information:~~

~~a. The boundaries of the site and location of adjacent public streets;~~

~~b. The general location of proposed vehicular access points and internal private drives;~~

~~c. The proposed boundaries of areas within the site of: 1) open space areas where no building or parking lots will be permitted; 2) building areas where buildings and other structures and parking lots will be permitted;~~

~~d. The location of water channels, storm water detention areas, lakes and ponds;~~

~~provided, that prior to final approval of improvement plans as provided for in subsection E of this section, all of such areas shall be precisely defined.~~

~~D. The applicant shall also provide the following:~~

~~1. A statement of the planning objectives to be achieved by the development.~~

~~2. A plat of survey of the site.~~

~~3. A topographical analysis of the site with contour intervals of not more than two feet (2').~~

~~4. An aerial photograph of the site at a scale of not less than two hundred feet to the inch (1" = 200').~~

~~5. Information on existing water mains, sanitary sewers, storm sewers, storm water retention and runoff, stream channels, floodplains and floodways, lakes and ponds.~~

~~6. A study by traffic engineers providing information on the impact of the development on public streets and intersections.~~

~~7. A plat or map showing the land uses, physical features and zoning of all adjacent lands within four hundred (400) yards of the site.~~

~~E. Following final approval of the Planned dDevelopment plan for the site, no building permit shall be issued and no improvements shall be commenced until an improvement plan shall have been approved in the manner provided in the applicable provisions of the subdivision regulations 1 .~~

~~F. The owner of property zoned ORA3 may file from time to time applications for approval of proposed amendments to an approved Planned dDevelopment plan, which applications shall be processed in the manner provided in subsections B through E of this section. (Ord. G-60, 3-22-1966; Ord. G-233, 5-31-1978)~~

~~Notes~~

~~1 1. See title 14 of this code.~~

ARTICLE D. O3 OFFICE DISTRICT

SECTION:

13-10D-1: Permitted Uses

13-10D-2: Special Uses

13-10D-3: Lot Area Requirements

13-10D-4: Additional Regulations

13-10D-1: PERMITTED USES:

Accessory uses and structures including:

Restaurants, accessory cocktail lounges, and outdoor dining areas (as described in section 13-10-4) over five (5) stories in height which is used principally for a permitted use, and when located on floors below those used for the principal use or on the top floor or roof of such structure.

Retail sales and personal service uses~~, having no exterior advertising and accessible only from the lobby and interior of a building (which is over 12 stories in height) and used for a permitted principal use and when no single establishment occupies more than two thousand (2,000) square feet of floor area.~~ when located on floors below those used for the principal use. Signs may be permitted equivalent to first floor restaurants.

Banks and financial institutions.

Electric distribution centers and substations.

Gas regulator station.

Offices. (Ord. G-60, 3-22-1966; Ord. G-842, 10-9-2007; Ord. G-1163, 4-28-2020)

13-10D-2: SPECIAL USES:

Daycare center, provided such facility complies with all licensing requirements of the state and maintains a direct alarm hookup to the Oak Brook police department.

Heliports, not for freight, shall meet all of the standards as contained in subsection 13-10A-4C of this chapter. Additionally, the operation of said heliport shall meet the performance standards as contained in section 13-10-3 of this chapter.

Hotel or combination office and hotel.

Public utility, governmental service and transportation uses.

Bus turnarounds and passenger shelters.

Emergency warning system structures.

Fire and police stations.

Outdoor ATM (automated teller machine) walk-up or drive-thru

Sewage and storm water lift stations.

Telephone exchanges, transmission buildings and equipment, and outdoor telephone booths and pedestals.

Water filtration plants, wells, pumping stations and reservoirs. (Ord. G-60, 3-22-1966; Ord. G-454, 10-9-1990; Ord. G-483, 3-10-1992; Ord. G-747, 4-27-2004; Ord. G-1163, 4-28-2020)

13-10 D-3: LOT AREA REQUIREMENTS:

A. Floor Area Ratio: Not to exceed 0.8.

B. Yards:

1. Front: Not less than one hundred feet (100') in depth, except when adjacent to a residence district boundary line not less than one hundred fifty feet (150') in depth.

2. Side: Not less than thirty feet (30') in depth, except: a) that portion of a side yard abutting a residence district shall be not less than one hundred fifty feet (150') in depth; b) a side yard abutting a street shall be not less than forty feet (40') in depth; and c) a side yard abutting 22nd Street shall be not less than one hundred feet (100') in depth.

3. Rear: Not less than forty feet (40') in depth, except that portion of a rear yard abutting a residence district shall be not less than one hundred feet (100') in depth and except that a rear yard abutting an alley or service drive may be reduced by twenty feet (20') in depth. (Ord. G-60, 3-22-1966; Ord. G-213, 3-22-1977)

13-10 D-4: ADDITIONAL REGULATIONS:

A. Awnings, Marquees And Signs: See chapter 11 of this title.

B. Off Street Parking And Loading: Off street parking and loading shall be as provided in chapter 12 of this title. (Ord. G-60, 3-22-1966; Ord. G-233, 5-31-1978; Ord. G-305, 9-8-1981; Ord. G-695, 3-26-2002)

ARTICLE E. O4 OFFICE DISTRICT

SECTION:

13-10E-1: Permitted Uses

13-10E-2: Special Uses

13-10E-3: Lot Area Requirements

13-10E-4: Additional Regulations

13-10E-1: PERMITTED USES:

Accessory uses and structures including:

Restaurants including outdoor dining (as described in section 13-10-4) and accessory cocktail lounges in a structure five (5) stories or more in height which is used principally for a permitted use, and when located on the ground or on floors below those used for the principal use or on the top floor or roof of such structure.

Retail sales and personal service uses when no single establishment occupies more than two thousand (2,000) square feet of floor area.

Buildings existing at the time of rezoning to O4 office district may be used for any of the uses permitted in the zoning district applicable to the property at the time of its rezoning; provided that in the event that: a) the structure is substantially damaged and the owner is not required by the lease or otherwise to restore the structure to its prior condition; or b) the structure is not occupied, used or leased for such purpose or purposes for a period of twelve (12) consecutive months, then its future use shall be limited to one or more of the uses permitted in this article, or, with the prior approval of the village board of trustees, to one or more of the special uses set forth in section 13-10E-2 of this article.

Electric distribution centers and substations.

Gas regulator station.

Office supply retail establishments.

Offices. (Ord. G-60, 3-22-1966; Ord. G-1163, 4-28-2020)

13-10 E-2: SPECIAL USES:

Daycare center, provided such facility complies with all licensing requirements of the state and maintains direct alarm hookup to the Oak Brook police department.

Health clubs, private, membership only, in multi-building office complexes under single ownership or control on sites not less than ten (10) acres. Such structure shall not front on any perimeter road, and access thereto shall be provided only from interior roadways.

Heliports, not for freight, shall meet all of the standards as contained in subsection 13-10A-4C of this chapter. Additionally, the operation of said heliport shall meet the performance standards as contained in section 13-10-3 of this chapter.

Hotel or combination office and hotel.

Medical offices.

Outdoor ATM (automated teller machine) walk-up or drive-thru

Mixed use development on properties not less than ten (10) acres in area subject to ~~the following:~~ an approved Planned Development.

~~A. Authorized Uses:~~

~~1. Permitted; B1 District; Exceptions: All permitted uses authorized in the B1 local shopping center district, except that the following uses are not permitted:~~

~~Fire stations.~~

~~Launderettes, including automatic self-service dry cleaning equipment.~~

~~Libraries, branch.~~

~~Police stations.~~

~~2. Permitted; B-2 District; Exceptions: All permitted uses in the B-2 regional shopping center district, except that the following uses are not permitted:~~

~~Automobile service stations.~~

~~Electric distribution centers and substations.~~

~~Gas regulator stations.~~

~~Hospitals, having not more than ten (10) beds and first aid stations for the treatment of emergency cases.~~

~~Laundries, dyeing and cleaning establishments.~~

~~Laundries, self-service, and shops for the collection and distribution of laundry and dry cleaning articles.~~

~~Messenger and telephone service stations.~~

~~Printing plants, newspaper, magazine and similar publications.~~

~~Radio and television broadcasting stations.~~

~~Service, cleaning and repair shops, for personal, household or garden equipment.~~

~~3. Permitted; B-3 District; Exceptions: All permitted uses in the B-3 general business district, except that the following uses are not permitted:~~

~~Animal hospitals and veterinarian offices.~~

~~Automobile accessory stores.~~

~~Automobile service stations.~~

~~Building material sales, not including outside storage.~~

~~Cartage and express facilities.~~

~~Clothing pressing establishments.~~

~~Clubs, lodges and fraternal organizations.~~

~~Coin and philatelic stores.~~

~~Electric distribution centers and substations.~~

~~Employment agencies.~~

~~Exhibition halls.~~

~~Fire stations.~~

~~Garages, public, where body repair and painting are incidental accessory uses, but not including automobile wrecking yards.~~

~~Garages, storage.~~

~~Gas regulator stations.~~

~~Greenhouses and conservatories.~~

~~Kennels, with no outdoor dog runs.~~

~~Laboratories, medical, dental or optical.~~

~~Libraries.~~

~~Locksmith shops.~~

~~Mail order service stores.~~

~~Orthopedic and medical appliance stores.~~

~~Pet service, domestic.~~

~~Physical culture and health service, gymnasiums, reducing salons, massage salons and public baths.~~

~~Plumbing, heating, air-conditioning and electrical fixtures and equipment, showroom and shops, for domestic use only.~~

~~Police stations.~~

~~Radio and television stations.~~

~~Recording studios.~~

~~Recreational buildings, community centers and meetings halls.~~

~~Religious institutions, churches, chapels, temples or synagogues.~~

~~Sewing machine sales and services.~~

~~Taxidermists.~~

~~Telegraph offices.~~

~~Typewriter and adding machine sales and service establishments.~~

~~Undertaking establishments and funeral parlors.~~

~~4. Special; B-1 District; Exceptions: All special uses authorized in the B-1 local shopping center district, except as specified in subsection A7 of this use.~~

~~5. Special; B-2 District; Exceptions: All special uses in the B-2 regional shopping center district, except as specified in subsection A7 of this use.~~

~~6. Special; B-3 District; Exceptions: All special uses in the B-3 general business district, except as specified in subsection A7 of this use.~~

~~7. Nonpermitted Uses: The following uses are not permitted, notwithstanding the provisions of the zoning regulations:~~

~~Amusement establishments, including gymnasiums, swimming pools and skating rinks.~~

~~Automobile minimarket.~~

~~Automobile service stations.~~

~~Clubs, lodges, fraternities and community centers.~~

~~Drive-in establishments for permitted uses.~~

~~Fire and police stations.~~

~~Gas regulator stations.~~

~~Horse stables and riding academies, public.~~

~~Nursing homes.~~

~~Open sales lots, when accessory to new automobile, trailer or boat sales establishments.~~

~~Recreation, outdoor, par 3 and miniature golf courses, golf driving ranges, swimming and tennis clubs, and other outdoor recreation uses as approved by the village board of trustees.~~

~~Water filtration plants, wells, pumping stations and reservoirs.~~

~~8. Additional Authorized Uses:~~

~~Bakeries, where not more than forty percent (40%) of the floor area is devoted to processing.~~

~~Barber shops and beauty parlors, day spas, tanning salons.~~

~~Clinics, medical, dental and optometric including accessory laboratories.~~

~~Drive-in and drive-through banking facilities.~~

~~Garden supply, retail.~~

~~Health clubs, including accessory uses such as daycare, spa services including tanning and salon, selling of goods including clothing, food, other items related to health and well-being.~~

~~Indoor entertainment facilities, except for game rooms and pool rooms.~~

~~Offices: business, professional and public. Any such office use may also include a daycare center.~~

~~Retail food products sales facilities.~~

~~Seasonal, portable carts serving only limited menu foods and/or beverage items in outdoor areas of a shopping center as a convenience to pedestrian shoppers, provided that: a) all aspects of the operation and sales meet the applicable requirements of the DuPage County health department; and b) cart locations have appropriate utilities provided, are not convenient to drive-up business, and do not materially interfere with access to or visibility of other establishments within the shopping center.~~

~~Single-family attached dwellings.~~

~~B. Lot Requirements:~~

~~1. Yards:~~

~~a. Front: Not less than one hundred feet (100') in depth; provided that parking may be installed and utilized in this setback along York Road not less than thirty feet (30') of the property line; and further provided that canopies may encroach no more than eight feet (8') into any required front yard;~~

~~b. Rear: Not less than thirty feet (30'); provided that canopies may encroach no more than eight feet (8') into any required rear yard; and further provided that hotel and condominium canopies may encroach no more than fifteen feet (15') into any required rear yard;~~

~~c. Side: Not less than thirty feet (30'); provided that canopies may encroach no more than eight feet (8') into any required side yard; and further provided that hotel and condominium entryway coverings may encroach no more than fifteen feet (15') into a required side yard;~~

~~provided, however, that when a developed zoning lot which contains two (2) or more principal buildings is subdivided the yards required along the new lot lines created by the subdivision shall be not less than thirty feet (30') in depth and the depth of all required yards for each lot shall be shown on the subdivision plat; provided, that existing parking stalls and aisles and access and service drives shall be permitted to continue within said yards and within the yards along the boundaries of the original zoning lot required by this subsection B1, as modified by subsection 13-12-3H of this title; and provided further that upon redevelopment of any part of a lot, other than for resurfacing or for utility replacement, which development requires removal of existing parking stalls or aisles located in whole or in part within areas where such accessory uses are not permitted by said subsections as so modified, no new stalls or aisles shall be constructed in such areas except as permitted by said subsections as so modified, and any landscaping therein required by this title shall be promptly installed and properly maintained.~~

~~2. Floor Area Ratio: Not to exceed 1.0.~~

~~3. Structure Height: Not more than sixteen (16) stories or one hundred eighty feet (180'), whichever is greater.~~

C. Parking And Loading: In a mixed use development containing hotel and/or office uses:

~~1. Up to thirty five percent (35%) of required parking spaces for all uses may have a minimum width of eight and one-half feet (8.5').~~

2. No more than fifteen percent (15%) of required parking spaces may be located within ~~one hundred feet (100') of York Road.~~

~~3. Notwithstanding the provisions of subsection 13-12-3C of this title, the minimum aisle width shall be twenty four feet (24').~~

~~4. The following provisions shall govern driveways notwithstanding the provisions of subsection 13-12-3E of this title: Spacing between driveways shall be consistent with good engineering practice as reasonably determined by the village engineer and not less than thirty five feet (35').~~

~~5. The following provisions shall govern loading requirements, notwithstanding the provisions of section 13-12-7 of this title: Loading docks and loading berths are not required provided that off street loading areas are installed.~~

~~D. Signs:~~

~~1. Monument Signs:~~

~~a. One at fifteen feet by sixteen feet (15' x 16') (2 sided) with slots for tenant signage (240 square feet, each side, 480 square feet total).~~

~~b. One at ten feet by sixteen feet (10' x 16') (2 sided) (160 square feet each side, 320 square feet total).~~

~~2. Directional And Miscellaneous/Wayfinding Signs:~~

~~a. Up to twenty (20) signs, each no more than twenty (20) square feet.~~

~~3. Restaurant And Retail Signs:~~

~~a. On building signage/entrance signage.~~

~~b. Gross surface area of all signs shall be no more than two (2) times the number of linear feet in the length of the building wall facing a public street.~~

~~c. On a corner or through lot, a sign may be erected along each street frontage.~~

~~d. Height of letters are limited to thirty six inches (36").~~

~~e. The sign shall not project more than thirty inches (30") from any facade or canopy and shall not be higher than the top of the building.~~

~~4. Blade Signage: The following sign provisions are available for each occupant of any nonresidential use:~~

~~a. Signage shall be no larger than eight (8) square feet.~~

~~b. Height of letters are limited to twelve inches (12").~~

~~c. Signage shall be at least eight feet (8') above the elevation of the sidewalk.~~

~~d. Signage shall project no more than sixty inches (60") from the facade.~~

~~5. Health Club Signs:~~

~~a. Building signage/entrance signage.~~

~~b. Gross surface area shall be no more than six hundred thirty (630) square feet.~~

~~c. Height of letters are limited to forty eight inches (48").~~

~~d. The sign shall not project more than thirty inches (30") from any facade or canopy and shall not be higher than the top of the building.~~

~~e. Health club may have three (3) building/entrance signs: two (2) on the building and one at the main entrance.~~

~~6. Hotel Signage:~~

~~a. Top of the building (north side): Up to one hundred forty (140) square feet.~~

~~b. Top of the building (south side): Up to sixty five (65) square feet.~~

~~c. Porte-cochere signage: Up to one hundred forty five (145) square feet.~~

~~d. Ground sign: Up to three (3) square feet.~~

~~7. Condominium Signage:~~

~~a. Entrance Signage: The primary and secondary entrances may each have the following signage:~~

~~(1) Gross surface area shall be no more than two (2) times the number of linear feet in the length of the building wall facing a public street.~~

~~(2) Height of letters are limited to thirty six inches (36").~~

~~(3) The signs shall not project more than thirty inches (30") from any facade or canopy and shall not be higher than structure height.~~

~~b. Parking Signage For Condominiums:~~

~~(1) Limited to thirty (30) square feet.~~

~~8. Location Of Signs: Except for signs authorized in subsection D2 of this use, no ground sign may be closer than ten feet (10') from any lot line and no sign may be closer than three feet (3') from a driveway or parking area.~~

~~E. Landscaping: The following provisions shall govern requirements for landscaping notwithstanding the provisions of subsections 13-12-4B and C of this title:~~

~~1. Screening And Landscaping: The following landscaped and planted areas shall be provided and maintained for all parking areas:~~

~~a. Front Yards: Permanent screening at least two feet (2') in height shall be installed in front yard areas adjacent to parking areas. This screening may consist of a planted earth berm, shrubs or trees, or a combination of both.~~

~~b. Side And Rear Yards: Permanent peripheral screening at least two feet (2') in height shall be installed in side and rear yards adjacent to parking areas. This screening may consist of a planted earth berm, shrubs or trees, or a combination of both.~~

~~2. Lot Area: Landscaped areas shall occupy not less than ten percent (10%) of the total lot area.~~

Public utility, governmental service and transportation uses:

Bus turnarounds and passenger shelters.

Emergency warning system structures.

Fire and police stations.

Schools - nonresidential, postbaccalaureate school, provided that not more than twenty percent (20%) of the course offerings may be prerequisite to admission to the postbaccalaureate programs.

Sewage and stormwater lift stations.

Telephone exchanges, transmission buildings and equipment, and outdoor telephone booths and pedestals.

Water filtration plants, wells, pumping stations and reservoirs. (Ord. G-60, 3-22-1966; Ord. G-710, 12-10-2002; Ord. G-827, 1-23-2007; Ord. G-914, 1-12-2010; Ord. G-1074, 4-12-2016; Ord. G-1163, 4-28-2020)

13-10 E-3: LOT AREA REQUIREMENTS:

A. Floor Area Ratio: Not to exceed 0.8.

B. Structure Height: Not to exceed one hundred eighteen feet (118') or eight (8) stories in height, whichever is less.

C. Yards:

1. Front: Not less than sixty feet (60') in depth, except: a) when adjacent to a residence district boundary line not less than one hundred fifty feet (150') in depth; and b) when abutting 22nd Street or York Road not less than one hundred feet (100') in depth.

2. Side: Not less than thirty feet (30') in depth, except: a) that portion of a side yard abutting a residence district shall be not less than one hundred fifty feet (150') in depth; b) a side yard abutting a street shall be not less than forty feet (40') in depth; and c) a side yard abutting 22nd Street or York Road shall be not less than one hundred feet (100') in depth.

3. Rear: Not less than forty feet (40') in depth, except that portion of a rear yard abutting a residence district shall be not less than one hundred feet (100') in depth and except that a rear yard abutting an alley or service drive may be reduced by twenty feet (20') in depth. (Ord. G-60, 3-22-1966)

13-10 E-4: ADDITIONAL REGULATIONS:

A. Awnings, Marquees And Signs: See chapter 11 of this title.

B. Off Street Parking And Loading: Off street parking and loading shall be as provided in chapter 12 of this title. (Ord. G-60, 3-22-1966; Ord. G-619, 9-22-1998; Ord. G-695, 3-26-2002)

CHAPTER 12
OFF STREET PARKING AND LOADING

SECTION:

13-12-1 : Scope Of Regulations

13-12-2 : Permissive Parking And Loading Facilities 13-12-

3: Off Street Parking Regulations

13-12-4 : Design And Maintenance

13-12-5 : Off Street Parking Spaces Required 13-

12-6: Handicap Parking

13-12-7 : Off Street Loading Regulations

13-12-8 : Parking For Damaged Or Destroyed Uses

13-12-1 : SCOPE OF REGULATIONS:

The off street parking and loading provisions of this chapter shall apply as follows, subject to the restrictions set forth in section 13-12-3 of this chapter:

A. Accessory off street parking and off street loading facilities shall be provided as required by the regulations of this chapter for all uses and structures established in each district after the effective date hereof. However, where a building permit has been issued prior to the effective date hereof, and construction is begun within ninety (90) days after such effective date and diligently prosecuted to completion, parking and loading facilities as required for the issuance of said building permit may be provided in lieu of any different amounts required by this chapter.

B. When the intensity of use of any structure or premises is increased through the addition of dwelling units, gross floor area or seating capacity parking and loading facilities for the addition shall be provided in the amount specified herein.

C. Whenever the existing use of a structure shall hereafter be changed to a new use, parking or loading facilities shall be provided as required for such new use. However, if the said structure was erected prior to the effective date hereof, additional parking or loading facilities are mandatory only in the amount by which the requirements for the new use would exceed those for the existing use, if the latter were subject to the parking and loading provisions of this chapter.

D. The design and engineering for all new or modifications to existing parking and loading facilities shall be approved by the village engineer prior to construction. (Ord. G- 687, 10-23-2001)

13-12-2 : PERMISSIVE PARKING AND LOADING FACILITIES:

Nothing in this chapter shall be deemed to prevent the voluntary establishment of off street parking and loading facilities to serve any existing uses or structures, provided that all regulations herein governing the location, design, and operation of such facilities are followed. (Ord. G-687, 10-23-2001)

13-12-3 : OFF STREET PARKING REGULATIONS:

A. Existing Parking Facilities: Accessory off street parking facilities in existence on the effective date hereof and located on the same lot as the structure or use served shall not hereafter be reduced below the requirements for a similar new structure or use under the provisions of this chapter.

B. Location: After the effective date hereof, all off street parking spaces shall be located on the same lot as the building, structure or use of land served; however, off street parking spaces may also be located on a lot other than the lot on which the building, structure or use of land served is located, provided that said spaces are also within five hundred fifty feet (550') walking distance of such building, structure, or use of land. All off street parking spaces required for single-family residences shall be located on the same lot as the residence, provided that no required spaces may be located in any front or side yard.

C. Size And Aisles: Each required off street parking space shall have a width and length, exclusive of access drives or aisles, ramps, columns, or office and work areas in accordance with standards set forth below. Enclosed parking spaces shall have a vertical clearance of at least seven feet (7'). Each required off street parking space shall open directly upon an aisle or driveway of a width and design in accordance with standards set forth below:

MINIMUM STANDARDS OF PARKING SPACES, AISLES AND PARKING BAYS FOR PARKING ACCESSORY TO NONOFFICE USES

Minimum Space Per Car:			Width 9'0" Length 18'0"		
	Parking Space And Aisle Dimensions:			Width Of Parking Bays[1]	
Angle Of Parking	Width Of Space Feet And Inches	Width Of Space Parallel To Aisle, Feet And Inches	Depth Of Space Perpendicular To Aisle, Feet And Inches	Width Of Aisle Feet And Inches	Head-In To Curb Feet And Inches
45°	9'0"	12'9"	19'1"	12'0"	50'2"
60°	9'0"	10'5"	20'1"	17'0"	57'2"
75°	9'0"	9'4"	19'9"	22'0"	61'6"
90°	9'0"	9'0"	18'0"	27'0"	63'0"

MINIMUM STANDARDS OF PARKING SPACES, AISLES AND PARKING BAYS FOR

PARKING ACCESSORY TO OFFICE AND HOTEL USES

Minimum Space Per Car:			Width 8'6" Length 17'6"		
	Parking Space And Aisle Dimensions:			Width Of Parking Bays[2]	
Angle Of Parking	Width Of Space Feet And Inches	Width Of Space Parallel To Aisle, Feet And Inches	Depth Of Space Perpendicular To Aisle, Feet And Inches	Width Of Aisle Feet And Inches	Head-In To Curb Feet And Inches
45°	8'6"	12'0"	18'5"	12'0"	48'10"
60°	8'6"	9'10"	19'5"	16'0"	54'10
75°	8'6"	8'10"	19'1"	20'0"	58'2"
90°	8'6"	8'6"	17'6"	24'0"	59'0"

D. Timing Of Construction: All required off-street parking shall be constructed in accordance with the design criteria of this chapter and shall be improved and ready for use as a condition of occupancy for the structure, issuance of additional permits or use of land. However, the property owner may request approval from the ~~d~~Director ~~of community~~ D~~d~~evelopment Services, to initially construct no less than seventy five percent (75%) of the required parking as a condition of occupancy with the remaining required spaces to be set aside and constructed when the parking demands for the site as determined by the village, require the construction of the set aside parking spaces. Prior to occupancy, a written covenant agreeing to construct the set aside parking spaces shall be submitted to the village for review and approval. Once approved, this document shall be filed for recording in the office of the county recorder of deeds and shall run with the parcel ofland.

E. Access: All off-street parking facilities shall be provided with appropriate means of vehicular access to a street in accordance with regulations set forth below:

ACCESS DRIVEWAYS FROM STREETS TO

OFF-STREET PARKING AND LOADING SPACES

1. Width of driveways (measured at the lot line adjoining a street):

a. Residential Uses: Not less than nine feet (9') wide or more than twenty feet (20') wide.

b. Nonresidential Uses:

(1) Not less than twelve feet (12') wide or more than twenty two feet (22') wide for a one-way driveway.

(2) Not less than twenty two feet (22') wide or more than twenty five feet (25') wide for a two-way driveway serving twenty (20) or fewer parking spaces or one loading berth.

(3) Not less than:

(A) Twenty four feet (24') wide or more than thirty eight feet (38') wide for a two-way driveway (2 lanes out and 1 lane in) without a median; or

(B) Twenty four feet (24') wide or more than forty four feet (44') wide for a two-way driveway (2 lanes out and 1 lane in) with a median, serving more than twenty (20) parking spaces or two (2) or more loading berths.

2. Radius connecting street pavement edge and driveway edge:

a. In Residential Districts: Not less than two feet (2').

b. In All Other Districts: Not less than fifteen feet (15').

3. Angle at intersection of a driveway and street: The acute angle formed at the intersection of driveway and street pavement edges shall be not less than sixty degrees (60°). The required turning angle for a vehicle entering or leaving a driveway shall not exceed ninety degrees (90°).

4. Spacing between separate driveway entrances on a lot (measured center to center at the lot line adjoining a street): no less than forty percent (40%) of the length of the lot line adjoining the street, or four hundred feet (400'), whichever is less.

5. On corner lots, spacing between driveway entrance and right- of-way line of an adjacent intersecting street (measured from the nearest edge of the driveway pavement at its intersection with the street pavement to the nearest right-of-way line, extended, of an adjacent intersecting street): no less than twenty percent (20%) of the length of the lot line adjoining the street being entered.

F. Use: Accessory off-street parking facilities, as accessory to specific uses listed in this chapter, shall be solely for the parking of automobiles of patrons, occupants or employees. When bus transportation is provided for patrons, occupants or employees of a specific

establishment, additional open or enclosed off-street parking spaces for bus parking on the premises shall be provided in accordance with all other regulations set forth in this chapter.

G. Computation: When determination of the number of off-street parking spaces required by this chapter results in a requirement of a fractional space, any fraction of one- half (1/2) or less may be disregarded while a fraction in excess of one-half (1/2) shall be counted as one parking space.

H. In Yards: Off-street parking spaces, open to the sky, in nonresidential districts, may be located in required interior side yards and rear yards, no less than ten feet (10') from the nearest lot line, except a parking area containing four (4) or more parking spaces shall be not less than forty feet (40') from an adjoining residence district boundary; provided, however, that:

1. On any lot in a B1 local shopping center district and a B3 general business district, the required off-street parking spaces may be located in a front yard or side yard adjoining a street not less than ten feet (10') from a street line;

2. On any lot in ORA1 or ORA2 office-research-assembly district and an O3 or O4 office district, not more than ten percent (10%) of the required off-street parking spaces, not to exceed six (6) spaces, may be located in a required front yard or along the side of the building adjoining the street and not less than twenty five-feet (25') from a street-or fifty feet (50') from the ~~street lines~~ of ~~Cermak~~ 22nd Street and York Road; and

3. On any lot in an ORA3 office-research-assembly district, the location of off-street parking spaces shall be controlled by subsection 13-10C-4E of this title and not the provisions of this subsection H.

I. Parking Of Certain Commercial Vehicles And Equipment In Residence Districts Prohibited: No motor vehicle bearing ambulance, funeral home, livery, taxi or tow truck state license plates shall be stored or parked on any lot in any residence district, unless such motor vehicle(s) is wholly enclosed in a building or such vehicle is being used in connection with a legitimate service actually being rendered for the benefit of such lot. No motor vehicle having a gross vehicle weight (including vehicle and attached equipment and maximum load) 3 in excess of eight thousand (8,000) pounds, except vehicles registered as recreational vehicles under the Illinois motor vehicle code, and no contractor's equipment, supplies or tools, shall be stored or parked on any lot in any residence district, unless:

1. Such vehicle, equipment, supplies or tools are wholly enclosed within a building; or

2. Such vehicle, equipment, supplies or tools are being used in connection with a legitimate service actually being rendered for the benefit of such lot.

J. Collective Provision: Off-street parking facilities for separate uses located in a principal building on a single parcel may be provided collectively if the total number of spaces so provided is not less than the sum of the separate requirements for each such use and provided that all regulations governing location of accessory parking spaces, in relation to

the use served, are adhered to. In addition, any parcel of land that has excess parking beyond what is required by this chapter may allocate excess parking capacity to any parcel or use that is directly contiguous to it under a shared parking arrangement if it meets the applicable requirements of this chapter. Such arrangement must be in written form with notification provided to the village.

K. Control Of Off-Street Parking Facilities: In cases where parking facilities are permitted on a lot other than the lot on which the structure or use served is located, a covenant running with the land must be recorded in the office of the recorder of deeds of DuPage County, Illinois, on the lot upon which the accessory off-street parking is located which prohibits any other use on that lot, and a copy of the recorded covenant certified by the office of the recorder of deeds of DuPage County, Illinois, shall be deposited with the ~~d~~Director of ~~community d~~Development Services. The covenant shall not be released until such time as either one of the following conditions occurs:

1. The structure on the lot containing the principal use is removed and the principal use terminated.

2. Another lot of the required size within the required distance is properly developed and used for the required accessory off- street parking in place of and in lieu of the initial lot used for accessory off-street parking with the same requirements, covenants, and conditions attaching to such substitute accessory use lot as approved by the same authority as required for approval of such initial lot.

L. Employee Parking: Parking spaces required on an employee basis shall be based on the maximum number of employees on duty or residing, or both, on the premises at any one time.

M. Repair And Service: Except in cases of emergency, no motor vehicle repair work or service of any kind shall be permitted in off-street parking areas. No gasoline or motor oil shall be sold or services performed in conjunction with any accessory parking facilities unless such facilities are located within a completely enclosed structure, in which case gasoline and motor oil may be sold within such structure to the users of such facilities, provided that no sign thereto is visible from outside the structure and provided further that all gasoline pumps shall be effectively screened from view of streets and residence districts. (Ord. G-687, 10-23-2001; Ord. G-758, 8-24-2004)

Notes

1 1. Parking bay consists of 2 rows of parking spaces and 1 aisle.
2 1. Parking bay consists of 2 rows of parking spaces and 1 aisle.
3 1. Equivalent to Illinois motor vehicle registration class C and higher, second division vehicles.

13-12-4 : DESIGN AND MAINTENANCE:

A. Surfacing: Except in the R1 and R2 single-family residential zoning districts where off street parking areas can be either stone or hard surfaced, all off street parking areas shall be improved with an all weather hard surface pavement installed in accordance with the village of Oak Brook public works construction standards.

~~B. Screening And Landscaping: The following landscaped and planted areas shall be provided and maintained for all parking areas:~~

~~1. Front Yards: Permanent screening at least four feet (4') high shall be installed in front yard areas adjacent to parking areas. This screening may consist of a planted earth berm, densely planted shrubs or trees, or a combination of both.~~

~~2. Side And Rear Yards: Permanent peripheral screening at least five feet (5') high shall be installed in side and rear yards adjacent to parking areas. This screening may consist of a planted earth berm, densely planted shrubs or trees, or a combination of both. In side and rear yards, the screening shall be so located and constructed as not to interfere or conflict with the use of any utility easements or utility installations existing or planned to be installed in these easement areas.~~

~~C. Interior Parking Lot Landscaping: Landscaped areas shall occupy not less than ten percent (10%) of the total lot area excluding:~~

~~1. The building footprint or footprint of other structures,~~

~~2. All required front yard or street setback areas, and~~

~~3. Any required landscape areas along rear lot lines.~~

~~In parking areas which are wider than one bay of double parking, interior shade trees shall be planted with a maximum spacing of forty feet (40'), provided that at least one tree is located in the area occupied by every fifteen (15) interior parking spaces. Landscaped dividers with a minimum width of six feet (6') shall be provided between every three (3) parking bays. Individual permanent planter areas (minimum size of 8 feet 6 inches by 17 feet) are required for interior trees with a minimum caliper of three inches (3"), which shall be of a variety which do not drop a messy fruit (see village of Oak Brook public works construction standards for list of appropriate trees).~~

~~D~~B. Landscape Plans: Complete detailed landscaping plans shall be submitted for approval showing type, Latin and common names, size and location of planting material, in accordance with the requirements and standards of Chapter 18.

~~E~~C. Lighting: Illumination of an off street parking area shall be arranged so as not to project direct rays of light or glare into any roadway or adjacent property. Intensity of illumination of parking areas shall be in accordance with the village of Oak Brook public works construction standards. All lighting for business and office uses adjacent to residential districts shall be extinguished or reduced in intensity, not later than thirty (30) minutes after the close of business of the use being served.

~~F~~D. Disposal Of Storm Water: Adequate provision shall be made for the management of storm water in accordance with village standards so that such water shall not flow into adjacent property or onto or across sidewalks in a quantity or manner that would be detrimental thereto or inconvenient to persons using the sidewalks.

~~G~~E. Permanent Curbing: Continuous permanent concrete curbing conforming to the village of Oak Brook public works construction standards shall be provided adjacent to all driveway, loading and parking pavement associated with nonresidential uses.

~~H~~F. Striping And Traffic Circulation: Parking spaces shall be delineated by a single white or yellow line. For one-way movements along aisles and driveways, direction of movement shall be indicated by pavement markings or directional signs or both as determined by the village.

~~I~~G. Pedestrian Safety: In order to ensure pedestrian safety, where parking stalls are not aligned perpendicular to the primary pedestrian objective or where pedestrians will be required to cross parking aisles, a pedestrian walkway at least five feet (5') wide and clearly indicated by pavement markings shall be provided at intervals not to exceed two hundred feet (200').

~~J~~H. Parking Structures:

1. ~~Landscaping And Screening: All parking structures shall be landscaped (which includes 1 or more berms) pursuant to a landscape plan prepared by a landscape architect to screen substantially the first level from adjacent streets and other uses. For any parking structure that is four (4) floors or less in height, the landscaped area must be a minimum of ten feet (10') in depth but must average fifteen (15) in depth for all screening. For any parking structure that is in excess of four (4) floors, the landscaped area must be a minimum of twenty feet (20') in depth. Any approved landscape plan required for screening of a parking structure must incorporate evergreens within the plantings and include a maintenance schedule to ensure that any damaged or dead trees, shrubs or ground cover shall be replaced promptly. Regular maintenance of these landscaped areas shall also be required.~~

~~2~~1. Architecture/Design: All exterior walls of such structures, which are visible from adjacent roadways, shall be finished with a material to maintain a "common architectural character", as defined in section 13-8-4 of this title, with the principal building. Maintaining common architectural character between the parking structure and the principal building(s) shall be judged in terms of: building form and materials; the pattern, size, shape, and number of window openings; the glazing or screening of window openings; and surface treatments such as cornices, moldings, reveals and sills.

~~3~~2. Lighting: Parking structures with light standards on the top floor of the structure shall be located in the center aisle of the deck and shall be of appropriate design and scale. Low profile lighting should be used around the perimeter of the parking structure and all internal/external light sources shall be properly screened from view to minimize glare on adjacent property. (Ord. G-687, 10-23-2001)

3. Setbacks: For any new parking structure that abuts a Residence District, the setbacks shall be ten feet (10') plus two feet (2') for every one foot (1') in height above grade, up to a maximum setback of one hundred feet (100') for the parking structure. (Also see landscape setback requirements in Chapter 18)

13-12-5 : OFF-STREET PARKING SPACES REQUIRED:
There shall be provided for each structure and use hereafter erected, structurally altered, or enlarged, a minimum number of off-street parking spaces in accordance with the following:

Dwelling And Lodging Uses:	
Hotels	1 parking space for each lodging room, 1 parking space for each dwelling unit, and 1 parking space for each 100 square feet of retail sales, meeting area and dining area.
Single-family ~~attached and~~ (detached) ~~dwellings~~	2 ~~parking~~ spaces for each dwelling ~~unit~~.
Duplex and Townhomes (attached)	2 spaces for each dwelling.
Condominium and Apartments	2 spaces for each dwelling.
Assisted living units	0.5 parking spaces per dwelling unit.
Theaters, Schools, Institutions, Auditoriums Or Other Places Of Assembly:	
Churches, chapels, temples and synagogues	1 parking space for each 4 seats.
Clubs, lodges and fraternal organizations	1 parking space for every 100 square feet of floor space, or part thereof.
Colleges, universities and fine art schools	For classroom and administration buildings, 1 parking space for each 2 employees who are required to work during hours of normal operation, plus 1 parking space for each 3 students, in accordance with designed seating capacity of classroom facilities.
Gymnasiums, stadiums, meeting halls, convention and exhibition halls	1 parking space for each 4 seats in accordance with designed seating capacity.
Hospitals	1 parking space for every 500 square feet of floor area, or part thereof.
Libraries, museums and art galleries	1 parking space for every 500 square feet of floor area, or part thereof.
Sanitariums, health resorts, institutions for the aged, daycare centers, and nursing homes	1 parking space for every 1,000 square feet of floor area plus 1 space for every employee. Adequate stacking will also be provided for drop-off areas per the review and approval of the village engineer.
Schools:	
Commercial or trade, music, dance and business	1 parking space for every 250 square feet of floor area, or part thereof.
High	1 parking space for each 6 students, plus 1 parking space for each faculty member and other full-time and part- time employees.
Elementary and junior high	1 parking space for each faculty member, plus 1 for each other full-time employee.
Theaters, auditoriums and other places of public assembly accessory to schools and other institutional establishments	commercial
	Parks, playgrounds, outdoor and indoor recreation
Recreation Uses, Commercial Or Noncommercial:	
Bowling alleys and arcades of floor area, or part thereof.	
Golf courses	
Health salons and skating rinks,	

DRAFT

1 parking space for each 2.5 seats.	60 parking spaces for every 9 holes plus 1 parking space for each 250 square feet devoted to retail sales, restaurant use or meeting space.
	1 parking space for every 100 square feet of floor area, or part thereof.
1 parking space for every 200 square feet	1 parking space for every 10,000 square feet of area.
Swimming pools, commercial	1 parking space for every 75 square feet of surface water area when filled.

Business, Commercial And Industrial Use:

Appliance stores, motor vehicle sales establishments and establishments for repair of household equipment and furniture	1 parking space for every 200 square feet of floor area or part thereof.
Car wash (full service)	1 parking space for each 1.5 employees plus 20 stacking spaces.
Car wash (not full service including self-service)	1 parking space for each 1.5 employees plus 10 stacking spaces for vehicles that can be accommodated at full occupancy.
Automobile service stations	1 parking space for each island of gasoline pumps, plus 2 for each service bay.
Banks and other financial institutions	1 parking space for every 250 square feet of floor area, or part thereof.
Barbershops and beauty parlors	3 parking spaces for each operator's chair.
Furniture stores	1 parking space for every 400 square feet of floor area or part thereof. As used in this listing, "furniture store" shall mean establishments classified under standard industrial classification (SIC) 5712 as primarily engaged in the retail sale of household furniture with only incidental sales of: A. Floor coverings; B. Draperies, curtains and upholstery materials; C. Miscellaneous home furnishings; and D. Consumer audio and video electronic equipment but only as part of "home entertainment centers" which contain furniture as well as electronic components, but no significant sale of any other products or materials.
	1 parking space for each 1.5 employees as related to the working period when the maximum number of persons are employed on the premises, or 1 for each 800 square feet of floor area, whichever is greater.
	1 space for each 200 square feet of floor area.
	1 parking space for each 300 square feet of floor area.
Manufacturing, fabricating, processing, storing, cleaning, testing, assembly, repairing and service establishments (as permitted in office-research-assembly districts)	1 parking space for each 2 employees.
Medical and dental clinics and offices of physicians and dentists	
Offices, business, professional, administrative and public (other than medical and dental clinics, and offices of physicians and dentists)	1 parking space for every 100 square feet of floor area.
Public utility, governmental service and transportation uses	
Restaurants with a drive-through in an ORA-2 zoning district located within 1,000 feet of office buildings containing a minimum aggregate of 250,000 square feet at the time of initial restaurant construction	

Restaurants, with drive-through	1 parking space for every 66 $^{2}/_{3}$ feet of floor area.
Restaurants, without drive-through	1 parking space for every 100 square feet of floor area, or part thereof.
Theaters, except open air drive- ins	1 parking space for each 2.5 seats.
Undertaking establishments and funeral parlors	1 parking space for each 100 square feet of floor area.
Warehouse, storage, wholesale and mail order establishments	4 plus 1 parking space for each 1,500 square feet of floor area over 4,500 square feet, or 1 parking space for each 1.5 employees, whichever is greater.

B2 Regional Shopping Center Districts:

With a lot area of not more than 40 acres	Parking spaces and aisles not less in area than $2^{1}/_{4}$ times the floor area of buildings constructed.
With a lot area of 40 acres to 60 acres	Not less in area than $1^{7}/_{8}$ times the gross floor area of buildings constructed.
With a lot area of 60 acres or more	Not less in area than **1** /2 times the gross floor area of buildings constructed.

\

~~Determination Of Unspecified Offstreet Parking Facilities:~~

For permitted or special uses not listed above, the ~~community development director~~ Development Services Director shall determine the required number of off street parking spaces by comparing the proposed use against the most similar use listed in this title and requiring that particular parking ratio.

(Ord. G-687, 10-23-2001; Ord. G-758, 8-24-2004)

13-12-5 : HANDICAP PARKING:

~~See chapter 11 of this title. (Ord. G-687, 10-23-2001; Ord. G-695, 3-26-2002)~~

Accessible Parking Required: All facilities, which provide parking, shall provide accessible parking in compliance with the Sections 208 & 502 of the Illinois Accessibility Code of the Capital Development Board, as adopted, and of the Federal Americans with Disabilities Act, as amended from time to time.

13-12-6 : OFF STREET LOADING REGULATIONS:

There shall be provided off street loading berths not less than the minimum requirements specified in this section in connection with any structure which is to be erected or substantially altered, and which requires the receipt or distribution of materials or merchandise by trucks or similar vehicles in accordance with the following:

A. Location:

1. In all O districts, all accessory off street loading berths shall be on the same lot as the principal use and they shall face only interior lot lines. Open off street loading berths shall be located only at the rear of the building and shall be not less than one hundred feet (100') from an adjoining residence district boundary and such off street loading berths shall be effectively screened therefrom by a wall or fence, of architectural design consistent with the principal building on the lot, not less than six feet (6') nor more than eight feet (8') in height additionally screened by a planted earth berm, densely planted shrubs or trees, or a combination of both.

2. In the B2 zoning district, off street loading berths may face perimeter or boundary streets if said loading berths are screened by a stone or masonry wall at least eight feet (8') in height. No off street loading berths shall be permitted within five hundred feet (500') of a boundary street, unless such loading berths are screened and are located at the rear of the building.

3. In B1, B3 and B4 zoning districts, all loading berths shall be at the rear of the building facing an interior lot line. If the rear of the building faces a lot line fronting on a street, loading berths shall be enclosed by a wall of at least eight feet (8') high or shall be completely enclosed within a building. Where the rear of the building faces a lot line which is also a residence district zoning line, loading berths shall be set back at least one hundred feet (100') from said lot line and residence district boundary, and:

a. Completely enclosed within a building, or

b. Enclosed by a wall or fence not less than six feet (6') nor more than eight feet (8') in height, or

c. Effectively screened by a planted earth berm, densely planted shrubs or trees, or a combination of both.

B. Size: Unless otherwise specified in this title, a required off street loading berth shall be at least twelve feet (12') in width and at least fifty five feet (55') in length, exclusive of access drives, aisles, ramps, maneuvering space, columns, office and work areas, and shall have a vertical clearance of not less than fourteen feet (14').

C. Access: Each required off street loading berth shall have an adjacent open paved area, other than a street or public way, of adequate size and so located as to provide for all required maneuvering for truck access to the loading berth. Such areas and related access drives shall be in accordance with the regulations set forth in subsections 13-12-3C and E of this chapter and other applicable sections of this title and shall provide sufficient and adequate width and radii for a fifty five foot (55') long tractor semitrailer combination.

D. Surfacing: All open off street loading berths, access drives, aisles, and maneuvering spaces shall be improved in accordance with the village of Oak Brook public works construction standards.

E. Repair And Service: No storage of any kind nor motor vehicle repair work or service of any kind shall be permitted within any required loading berth.

F. Use: Space allocated to any off street loading berth shall not, while so allocated, be used to satisfy the space requirements for any off street parking facilities or portions thereof.

G. Required Berths:

1. The minimum number of off street loading berths accessory to office uses hereafter erected, structurally altered or enlarged in all business and office-research-assembly districts shall be in accordance with the following schedule: Floor Area Of Establishments (Square Feet)	Required Number
5,000 to 25,000	1
25,001 to 200,000	2

For each additional 200,000 square feet of floor area, or fraction thereof, over 200,000 square feet of gross floor area: 1 additional loading berth.

1. The minimum number of off street loading berths accessory to nonoffice uses hereafter erected, structurally altered, or enlarged in all business and office-research- assembly districts shall be in accordance with the following schedule:

Floor Area Of Establishments (Square Feet)	Required Number
5,000 to 25,000	1
25,001 to 40,000	2
40,001 to 100,000	3

For each additional 100,000 square feet of floor area, or fraction thereof, over 100,000 square feet of floor area: 1 additional loading berth. (Ord. G-687, 10-23-2001; Ord. G-750, 6-8-2004)

13-12-7 : PARKING FOR DAMAGED OR DESTROYED USES:

When any conforming or nonconforming use or structure which is in existence on the effective date hereof is restored and continued in operation after being damaged or destroyed by fire, collapse, explosion or other cause, to the extent that the cost of restoration does not exceed fifty percent (50%) of the assessed valuation, not less than the off street parking or loading facilities equivalent to any maintained at the time of such damage or destruction must be provided. However, in no case shall it be necessary to restore or maintain parking or loading facilities in excess of those required by this chapter for equivalent new uses or construction. (Ord. G-687, 10-23-2001)

CHAPTER 13
NONCONFORMING BUILDINGS, STRUCTURES AND USES

SECTION:

13-13-1 : Purpose

13-13-2 : Authority To Continue

13-13-1 : PURPOSE:

The purpose of this Chapter is to provide for the regulation of nonconforming uses, buildings and structures, and to specify those circumstances and conditions under which those nonconforming buildings, structures and uses shall be eliminated. (Ord. G-60, 3-22-1966; Ord. G-575, 9-24-1996)

13-13-2 : AUTHORITY TO CONTINUE:

Any building, structure or use which existed lawfully at the time of the adoption of this Title, and which remains or becomes nonconforming upon the adoption of this Title, or of any subsequent amendment thereto, may be continued only in accordance with the following regulations:

A. Repairs And Alterations: Ordinary repairs and alterations may be made to a nonconforming building or structure, provided that no structural alterations shall be made in or to such building or structure, all of which is designed or intended for a use not permitted in the district in which it is located, except those required by law, or except to make the building or structure and use thereof conform to the regulations of the district in which it is located. Ordinary repairs and alterations shall be determined by the Director of ~~Community~~ Development Services and shall include, among other things the replacement of storage tanks where the safety of operation of the installation requires such.

B. Additions And Enlargements:

1. A nonconforming building or structure all or substantially all of which is designed or intended for a use not permitted in the district in which it is located shall not be added to or enlarged in any manner unless such nonconforming building or structure, and use thereof, is made to conform to all the regulations of the district in which it is located.

2. A nonconforming building or structure which is nonconforming only as to bulk, may be added to or enlarged, provided such additions or enlargement conforms to all regulations of the district in which it is located.

C. Moving: No building or structure shall be moved in whole or in part to any other location unless every portion of such building or structure, and the use thereof, is made to conform to all regulations of the district in which the moved building is located.

D. Restoration Of Damaged Nonconforming Buildings Or Structures: A building, structure or portion thereof, all or substantially all of which is designed or intended for a use which is not permitted in the district in which it is located, and which is destroyed or damaged by fire or other casualty or act of God to the extent that the cost of restoration to the condition in which it was before the occurrence will exceed fifty percent (50%) of the total cost of reconstructing the entire building or structure, shall not be restored unless said building or structure and the use thereof shall conform to all regulations of the district in which it is located. In the event that such damage or destruction is less than fifty percent (50%) of the cost of reconstructing the entire building or structure, no repairs or construction for restoration shall be made unless such work is started within one year from the date of the partial destruction and is diligently prosecuted to completion.

E. Discontinuance Of Use Of Nonconforming Building Or Structure: A building, structure, or portion thereof, all or substantially all of which is designed or intended for a use which is not permitted in the district in which it is located, and in which the use has ceased by discontinuance or abandonment, on the effective date of this Title or thereafter is abandoned and remains unoccupied, or is not used for a continuous period of one year, shall not thereafter be occupied or used, except by a use which conforms to the use regulations of the district in which it is located.

F. Change Of Use In Nonconforming Building Or Structure: The nonconforming use of a building or structure, all or substantially all of which is designed or intended for a use not permitted in the district in which it is located, may be changed to a use permitted in the district in which the building or structure is located.

G. Nonconforming Use Of Conforming Buildings Or Structures: The existing nonconforming use of a part or all of a conforming building or structure may be continued subject to the following provisions:

1. The nonconforming use of a part of such building or structure shall not be expanded or extended into any other portion of such building or structure, nor changed to any other nonconforming use.

2. If a nonconforming use of such a building or structure is discontinued, or abandoned for a period of six (6) consecutive months, it shall not be renewed, and any subsequent use of such building or structure shall conform to the use regulations of the district in which the premises are located.

H. Nonconforming Use Of Land: The nonconforming use of land not involving a building or structure, or in connection with which any building or structure thereon is incidental or accessory to the principal use of land, may be continued subject to the following provisions:

1. Such nonconforming use shall not be expanded or extended beyond the area it occupies.

2. If such a nonconforming use of land is discontinued or abandoned for a period of six (6) consecutive months, it shall not thereafter be renewed, and subsequent use of land shall conform to the regulations of the district in which the land is located.

3. No nonconforming use of land shall be changed to another nonconforming use.

4. Where the nonconforming use of land is accessory to the nonconforming use of a building or structure, it shall be discontinued on the same date on which the nonconforming use of the building or structure is discontinued. (Ord. G-60, 3-22-1966; Ord. G-368, 10-22-1985; Ord. G-568, 4-1-1996; Ord. G-575, 9-24-1996)

CHAPTER 14
ADMINISTRATION AND ENFORCEMENT

SECTION:

13-14-1: Director Of ~~Community~~ Development Services

13-14-2: Zoning Certificates

13-14-3 : Filing Plans

13-14-4 : Planning and Zoning Commission ~~Board Of Appeals~~ Jurisdiction And Authority

13-14-5: Appeals

13-14-6 : Variations

13-14-7 : ~~Plan Commission Jurisdiction~~

13-14-~~8~~7: Amendments

13-14-~~9~~8: Special Uses

13-14-~~10~~9: Fees

13-14-~~11~~10: Violation, Penalty And Enforcement

13-14-~~12~~11: Public Hearing Notification Requirements

13-14-1 : DIRECTOR OF ~~COMMUNITY~~ DEVELOPMENT SERVICES:

The ~~director of community development~~ Director of Development Services or his/her designee shall enforce this title, and in furtherance of his/her authority shall:

A. Determine conformance of applications for building permits with regulations of this title.

B. Issue all zoning certificates, following approval as required in this title, and make and maintain records thereof.

C. Issue building permits.

D. Issue all certificates of occupancy, and make and maintain records thereof.

E. Issue permits for temporary parking and use of trailers.

F. Authorize, in writing, changes in residence districts signs that are more than six (6) square feet in area.

G. Conduct inspections of uses of land and structures in accordance with due process of law to determine compliance with the terms of this title.

H. Maintain permanent and current records of the administration and enforcement of this title, including, but not limited to, applications, processing and decisions for all amendments, variations and appeals, and chart and designate each: 1) district line amendment; and 2) special use on the zoning district map.

I. Provide and maintain a public information bureau relative to all matters pertaining to this title.

J. Receive, file and forward to the ~~zoning board of appeals~~ Planning and Zoning Commission all applications for variations, appeals of other matters on which the village board is required to act under this title.

K. Forward to the village clerk all applications initially filed with the ~~director of community development~~ Director of Development Services for amendments, and other matters necessary under this title upon which the village board of trustees is required to act.

L. Provide such clerical and technical assistance as may be required by the ~~zoning board of appeals~~ Planning and Zoning Commission in the exercise of its duties. (Ord. G-60, 3-22-1966)

13-14-2 : ZONING CERTIFICATES:

A. Zoning Certificates Required:

1. Except as hereinafter provided, no permit pertaining to the use of land or permit required by building codes shall be issued by any officer, department or employee of the village, unless the applications for such permits have been examined by the ~~director of community d~~Development Services department and he has affixed thereon certifications indicating that the applications comply with the provisions of this title.

2. An application for a zoning certificate for a structure and the use thereof or a land use which requires compliance with performance standards set forth in general regulations of the office-research-assembly districts 1 shall have affixed to it the certification of an architect or a structural engineer registered in the State of Illinois. Such certification shall state that the structure and the use thereof, or the use of land when no structure is involved, complies with all provisions of this Title pertaining to such performance standards. The ~~Director of Community~~ Development Services department shall, upon receipt of such application, approve and authorize the issuance of a zoning certificate, provided there is compliance with all other provisions of this Title. Within fifteen (15) days after the date of such approval, the ~~Director of Community~~ Development Services department shall examine said application and if, in ~~his~~ their opinion, the structure and use thereof, or use of land not involving a structure, does not in fact comply with such performance standards regulations, he shall advise such architect, or structural engineer, in writing, of his findings, stating the reason or reasons therefor. Failure of the

architect or structural engineer, to submit additional information or make revisions in the application necessary to comply with performance standards within thirty (30) days of such notification shall be cause for revocation of the zoning certificate.

B. Certificate Of Occupancy:

1. No structure erected or altered hereafter shall be occupied or used in whole or in part for any purpose whatsoever until a certificate of occupancy shall have been issued by the ~~Director of Community~~ Development Services department stating that the structure complies with all the building and health laws and ordinances and with the provisions of this Title. No change of use shall be made in any structure or part thereof now or hereafter erected or altered without a permit having been issued by the ~~Director of Community~~ Development Services department, and no permit shall be issued to make such change unless it is in conformity with the provisions of this Title.

2. Nothing in this Section shall prevent the continuance of the present occupancy or use of any existing structure, except as may be necessary for the safety of life and property.

3. Application of a certificate of occupancy shall be made coincident with the application for a building permit and such certificate shall be issued within ten (10) days after the erection or alteration of such structure has been completed. A record of all certificates shall be kept on file in the office of the ~~Director of Community~~ Development Services department and copies shall be furnished on request to any person having proprietary or possessory interest in the structure affected. A fee of ten dollars ($10.00) shall be charged for each original certificate and one dollar for each copy thereof. (Ord. G-60, 3-22-1966; Ord. G-203, 12-14-1976)

Notes

1 1. See Section 13-10-3 of this Title.

13-14-3 : FILING PLANS:

All applications for zoning certificates and building permits shall be accompanied by plans in triplicate, including landscaping plans ~~where required in ORA and O3~~ as required by this Title, drawn to scale, not less than one foot equal to one-tenth of an inch (1/10" = 1'), showing the actual shape and dimensions of the lot to be built upon, the exact size, area and location of the lot, of the structures and accessory structures existing, and the lines within which the structure shall be erected or altered, the existing and intended use of each structure or part thereof, the number of dwelling units or lodging rooms a residential structure is designed to accommodate, the design and location of off-street parking facilities, vehicular drives, and outdoor lighting, and such other information with regard to the lot and neighboring lots and performance standards as may be necessary to determine

and provide for the enforcement of this Title. Applications involving single-family attached and semi-detached dwellings and multiple-family dwellings shall also be accompanied by architectural drawings showing all elevations and indicating building materials to be used on the exterior of the structure. (Ord. G-60, 3-22-1966)

13-14-4 : PLANNING AND ZONING COMMISSION ~~BOARD OF APPEALS~~ JURISDICTION AND AUTHORITY 1 :

A. The Planning and Zoning Commission ~~Board of Appeals~~ is hereby designated as the proper commission or committee to publish notices as required by statute and these zoning regulations pertaining to proposed amendments to this Title and to make a written report and recommendation to the Board of Trustees on any such proposed amendment.

B. The Planning and Zoning Commission ~~Board of Appeals~~ is hereby invested with the following authority and jurisdiction:

1. To hear and decide appeals from any order, requirement, decision or determination made by the Director of ~~Community~~ Development Services or other authorized officials of the Village having jurisdiction under this Title.

2. To hear applications for variations from the terms provided in this Code in the manner and subject to the standards set forth in this Chapter.

3. To hold public hearings in matters pertaining to applications for planned developments, amendments and special uses.

4. To hear all other matters referred to it or upon which it is required to pass under this Title.

5. To consider applications for Subdivision as detailed in Title 14 of the Village Code.~~.~~

~~5~~ 6. Submit reports to the Board of Trustees setting forth its findings and recommendations in the manner prescribed in this Chapter. (Ord. G-60, 3-22-1966; Ord. G-116, 4-14-1970)

~~Notes~~

~~1 1. See Title 2, Chapter 8 of this Code for the Zoning Board of Appeals.~~

13-14-5 : APPEALS:

A. Authority: The Planning and Zoning Commission ~~Board of Appeals~~ shall hear and decide appeals from an administrative order, requirement, decision or determination

made by the Director of ~~Community~~ Development Services or other authorized official of the Village having jurisdiction under this Title.

B. Initiation:

1. An appeal to the Planning and Zoning Commission ~~Board of Appeals~~ may be taken by any person aggrieved or by any officer, department, board or commission of the Village. The appeal shall be taken within such time as shall be prescribed by the Board by a general rule by filing with the officer from whom the appeal is taken and with the Board a notice of appeal, specifying the grounds thereof. The officer from whom the appeal is taken shall forthwith transmit to the Board all the papers constituting the record upon which the appeal action is taken.

2. An appeal stays all proceedings in furtherance of the action appealed from, unless the officer from whom the appeal is taken certifies to the Planning and Zoning Commission ~~Board of Appeals~~, after the notice of appeal has been filed with him, that by reason of facts stated in this certificate a stay would, in his opinion cause imminent peril to life or property. In this event the proceedings shall not be stayed other than by an order of the Board or a court of record on application of and on notice to the officer from whom the appeal is taken, and on due cause being shown.

C. Processing:

1. An appeal shall be filed with the Village Clerk. The Village Clerk shall forward the appeal to the Planning and Zoning Commission ~~Board of Appeals~~ for processing in accordance with the Illinois Compiled Statutes.

2. The Planning and Zoning Commission ~~Board of Appeals~~ shall fix a reasonable time for the hearing of the appeal and give due notice thereof to parties and shall decide the appeal within reasonable time. The Board may reverse or affirm, wholly or partly, or may modify the order, requirement or decision or determination as in its opinion ought to be made on the premises and to that end has all the powers of the official from whom the appeal is taken.

D. Decisions: All decisions, after hearing of the Planning and Zoning Commission ~~Board of Appeals~~ on appeals from an administrative order, requirement, decision or determination of the Director of ~~Community~~ Development Services or other authorized official of the Village, shall, in all instances, be final administrative determinations and shall be subject to judicial review only in accordance with applicable statutes of the State. (Ord. G-60, 3-22-1966)

Notes

1 2. See Title 2, Chapter 8 of this Code for the Zoning Board of Appeals.

13-14-6 : VARIATIONS:

A. Authority: The Board of Trustees shall decide all applications for variations of the provisions of this Title after a public hearing held before the Planning and Zoning Commission ~~Board of Appeals~~ on such notice as shall be required by the Illinois Compiled Statutes. The Zoning Board of Appeals shall hold public hearings upon all applications for variations and shall report its recommendations to the Board of Trustees as to whether a requested variation would be in harmony with its general purpose and intent, and shall recommend a variation only where it shall have made findings of fact specifying the reason or reasons for recommending the variations. Such findings shall be based upon the standards prescribed in subsection D of this Section. No variation shall be granted by the Board of Trustees without such findings of fact. In the case of a variation where the Planning and Zoning Commission ~~Board of Appeals~~ fails to recommend the variation, it can only be adopted by ordinance with the favorable vote of two-thirds (2/3) of the Trustees.

B. Initiation: An application for a variation shall be in triplicate and may be made by any governmental office, department, board, bureau or commission, or by any person having a freehold interest, a possessory interest entitled to exclusive possession, a contractual interest which may become a freehold interest, or any exclusive possessory interest applicable to the land, or land and improvements described in the application for a variation.

C. Processing: An application for a variation shall be filed with the Village Clerk who shall forward one copy of such application to the Planning and Zoning Commission ~~Board of Appeals~~ for processing in accordance with applicable statutes of the State and one copy to the Board of Trustees.

D. Standards:

1. The Planning and Zoning Commission ~~Board of Appeals~~ shall not recommend a variation of the provisions of this Title as authorized in this Section unless it shall have made findings of fact based upon the evidence presented to it on the following specific issues that:

a. The property in question cannot yield a reasonable return if permitted to be used only under the conditions allowed by the regulations governing the district in which it is located.

b. The plight of the owner is due to unique circumstances.

c. The variation, if granted, will not alter the essential character of the locality.

2. For the purpose of supplementing the above standards, the Planning and Zoning Commission ~~Board of Appeals~~, in making the determination whether there are practical difficulties or particular hardships, shall also take into consideration the extent to which the following facts, favorable to the applicant, have been established by the evidence that:

a. The particular physical surroundings, shape, or topographical conditions of the specific property involved would bring a particular hardship upon the owner as distinguished from a mere inconvenience if the strict letter of the regulation were to be carried out.

b. The condition upon which the petition for variation is based would not be applicable generally to the other property within the same zoning classification.

c. The granting of the variation will not be detrimental to the public welfare or injurious to other property or improvements in the neighborhood in which the property is located.

d. The proposed variation will not impair an adequate supply of light and air to adjacent property, or substantially increase the danger of fire, or otherwise endanger the public safety or substantially diminish or impair property values within the neighborhood.

e. That the purpose of the variation is not based exclusively upon a desire to make more money out of the property.

f. That the alleged difficulty or hardship has not been created by any person presently having an interest in the property.

3. The Planning and Zoning Commission ~~Board of Appeals~~ may recommend and the Board of Trustees may require such conditions and restrictions upon the premises benefitted by a variation as may be necessary to comply with the standards set forth in this Section to reduce or minimize the injurious effect of such variation upon other property in the neighborhood, and to implement the general purpose and intent of this Title.

E. Unauthorized Variations: The variation procedure shall in no case be used to accomplish a result which could otherwise be achieved by a rezoning of the property involved, such as, but not limited to, establishment or expansion of a use not permitted in a residence district; authorizing the construction of residences in other than residence districts; nor authorizing other than single-family detached residences in the R1, R2, R3 and R4 Districts.

F. Reapplications: Any person having been denied a variation to the provisions of this Title respecting a specific parcel of property may not reapply for a like variation on said real property until the period of one year has elapsed since the denial of the application for variation by the Village President and Board of Trustees. (Ord. G-60, 3-22-1966; Ord. G-137, 9-14-1971)

13-14-7 : ~~PLAN COMMISSION JURISDICTION 1 :~~

~~The Plan Commission of the Village, which has been duly established with functions as prescribed by the Illinois Compiled Statutes, shall have the following duties under this Title:~~

~~A. Receive from the Village Clerk copies of applications for proposed amendments and thereafter may submit its recommendations thereon to the Zoning Board of Appeals and Board of Trustees.~~

~~B. Receive from the Director of Community Development copies of applications for proposed special uses and thereafter submit its recommendations thereon to the Director and Board of Trustees.~~

~~C. Act on all other matters which are referred to it as required by the provisions of this Title.~~

~~D. Review, from time to time, the provisions of this Title and to make reports of its recommendations with respect to proposed amendments to the Board of Trustees. (Ord. G-60, 3-22-1966)~~

~~Notes~~

~~1~~ ~~1. See Title 2, Chapter 1 of this Code for the Planning Commission.~~

13-14-87 : AMENDMENTS:

A. Authority: This Title may be amended from time to time by ordinance in accordance with applicable Illinois statutes. No vote shall be taken upon the adoption of a proposed amendment by the Village Board of Trustees until after a public hearing before the Planning and Zoning Commission ~~Board of Appeals~~ and a report of its findings and recommendations has been submitted to the Board of Trustees ~~along with the recommendation of the Plan Commission~~.

B. Initiation Of Amendment: Amendments may be proposed by the Village Board of Trustees, ~~Plan Commission or Zoning Board of Appeals~~ Planning and Zoning Commission, and by any person having a freehold interest, a possessory interest entitled to exclusive possession, a contractual interest which may become a freehold interest or any exclusive possessory interest which is specifically enforceable on the land which is described in the proposal for an amendment.

C. Processing:

1. A proposal for an amendment shall be filed with the Village Clerk and thereafter entered into the records of the first meeting thereafter of the Board of Trustees.

2. A copy of such proposal shall be forwarded by the Village Clerk to the ~~Zoning Board of Appeals~~ Planning and Zoning Commission with a request to hold a public hearing and submit to the Board of Trustees a report of its findings and recommendations. Such public hearing shall be held upon notice as required by Illinois Compiled Statutes.

3. ~~The Village Clerk shall also transmit a copy of such proposal to the Plan Commission. The Plan Commission shall submit an opinion report relative to such proposed amendment to the Zoning Board of Appeals and Board of Trustees.~~

D. Decisions: The Board of Trustees, upon report of the ~~Plan Commission , if such report is made, and the report of the Zoning Board of Appeals~~ Planning and Zoning Commission, and without further public hearing, may vote upon the adoption of any proposed amendment in accordance with applicable Illinois Compiled Statutes, or may refer it back to the ~~Boards~~ Planning and Zoning Commission for further consideration.

The following criteria shall be taken into consideration of a request for a zoning amendment:

1. The character of the neighborhood;
2. The extent to which property values are diminished by the particular zoning restrictions;
3. The extent to which the removal of an existing limitation would depreciate the value of other property in the area;
4. The suitability of the property for the zoned purposes;
5. The existing uses and zoning of nearby property;
6. The length of time under the existing zoning that the property has remained unimproved, considered in the context of land development trends in the area;
7. The relative gain to the public as compared to the hardship imposed on the individual property owner;
8. The extent to which the ordinance promotes the health, safety, morals, or general welfare of the public;
9. The relationship of the proposed use to the Comprehensive Plan of the Village; and
10. The community need for the use proposed by the property owner.

E. Reapplications: Any person having been denied an amendment to this Title respecting a specific parcel of property may not reapply for a like amendment on said real property until the period of one year has elapsed since the denial of the application for amendment by the President and Board of Trustees. (Ord. G-60, 3-22-1966; Ord. G-137, 9-14-1971)

13-14-98 : SPECIAL USES:

A. Purpose: The development and execution of this Title is based upon the division of the Village into districts, within any one of which the use of land and buildings and the bulk and location of buildings or structures, as related to the land, are essentially uniform. It is recognized, however, that there are special uses which, because of their unique character, cannot be properly permitted in particular districts without consideration, in each case, of the impact of those uses upon neighboring lands and upon public need for the particular use or the particular location. Such special uses fall into two (2) categories:

1. Uses operated by public agency or publicly-regulated utilities, or uses traditionally affected with a public interest.

2. Uses entirely private in character, but of such a nature that the operation may give rise to unique problems with respect to their impact upon neighboring property or public facilities such as, but not limited to, single-family attached and semi-detached dwellings, horizontal condominiums and other residential developments.

B. Authority: Special uses shall be authorized or denied by the village board in accordance with the statutes of the state applicable to amendments of this title, and the regulations and conditions set forth in this title for special uses.

No application for a special use shall be acted upon by the village board until after:

1. A written report is prepared and forwarded to ~~the board of appeals and~~ the village board by the ~~plan commission~~ Planning and Zoning Commission in a manner prescribed herein for amendments to this title; and

2. A public hearing has been held by the ~~zoning board of appeals~~ Planning and Zoning Commission, after due notice by publication as provided by the applicable statutes of the state for amendments and upon a report of the ~~plan commission~~ Planning and Zoning Commission to the board of trustees, if such a report is made.

C. Initiation: An application for a special use may be made by any person, firm or corporation or by any office, department, board, bureau or commission requesting or intending to request a zoning certificate.

D. Processing: An application for a special use, in such form and accompanied by such information as shall be established from time to time by the ~~plan commission~~ Planning and Zoning Commission, shall be filed with the village clerk and thereafter processed in the manner prescribed theretofore for applications and amendments. Special use applications may be processed simultaneously with requests for amendment of this title.

E. Decisions: The village board, upon report of the ~~zoning board of appeals~~ Planning and Zoning Commission ~~and the plan commission~~, and without further hearing, may authorize or deny an application for a special use in accordance with ~~the~~ Illinois Compiled Statutes ~~statutes of the state applicable to amendments~~, or may refer it back to the ~~board of appeals and the plan commission~~ Planning and Zoning Commission for further consideration.

No special use shall be authorized by the village board unless ~~the special use~~:

1. ~~Is of the type described in subsection A1 of this section, is deemed necessary for the public convenience at that location~~ The proposed use is operated by a public agency, or for proposed uses traditionally affected with a public interest, and the proposed building or use is necessary or desirable to provide a service or a facility which is in the interest of the public convenience;

2. The proposed building or use will be ~~Is~~ so designed, located and proposed to be operated that the public health, safety and welfare will be protected; and

3. The proposed building or use will ~~Would~~ not cause substantial injury to the value of other property in the neighborhood in which it is located.

F. Conditions: The ~~plan commission and zoning board of appeals~~ Planning and Zoning Commission may recommend, and the village board may provide, such conditions and restrictions upon the construction, location and operation of a special use, including, but not limited to, provisions for off street parking and loading as may be deemed necessary to promote the general objectives of this title and to minimize the injury to the value of the property in the neighborhood. (Ord. G-60, 3-22-1966; Ord. G-66, 12-19-1966)

13-14-~~10~~9: FEES:

Fees for any relief under this title shall be as otherwise established by separate ordinance. (Ord. G-60, 3-22-1966; Ord. G-132, 5-25-1971; Ord. G-289, 3-24-1981)

13-14-1~~1~~0: VIOLATION, PENALTY AND ENFORCEMENT:

A. Any person who violates, disobeys, omits, neglects, refuses to comply with or who resists enforcement of any of the provisions of this title shall, upon conviction, be fined as provided in the general penalty in section 1-3-1 of this code for each offense. Each day that a violation is permitted to exist shall constitute a separate offense.

B. The ~~director of community development~~ Director of Development Services is hereby designated and authorized to enforce this title. However, it shall also be the duty of all officers, citizens and employees of the village, particularly of all members of the police and fire departments, to assist the ~~director of community development~~ Director of Development Services by reporting to him/her any new construction, reconstruction, improper land uses, or upon seeming violations of this title. (Ord. G-60, 3-22-1966; Ord. G-233, 5-31-1978; 2000 Code)

13-14-1~~2~~1: PUBLIC HEARING NOTIFICATION REQUIREMENTS:

All applicants filing an application with the village of Oak Brook for a map amendment, variation or special use as provided for in this title shall provide notice of all public hearings related to their application in the following manner:

A. All applicants shall provide notice of any public hearing related to their application to all record owners (as required by the Illinois municipal code) and to the general public in

the manner and in the time frame as provided in division 13 (zoning) of article 11 of the Illinois municipal code 1 .

B. In addition to the notice required by the Illinois municipal code, a sign shall be placed on the subject property informing the general public of an upcoming public hearing in accordance with the following requirements:

1. Such sign shall be posted on the subject property at a location oriented to and readable from the nearest adjacent street or roadway. However, where a parcel abuts two (2) or more streets or roadways, one such sign oriented to and readable from each abutting street or roadway is required.

2. If no public road abuts the property, the sign shall be placed on the property in question in such a position as may be most readily seen by the public.

3. Public notification signs shall be posted not less than fifteen (15) days prior to the public hearing and shall not be removed until after the public hearing has been completed unless otherwise directed to do so by the ~~community development director~~ Development Services department. The applicant shall remove all signs within forty eight (48) hours after the closing of the public hearing.

4. The public notification signs shall be weatherproof and measure no smaller than two feet by three feet (2' x 3') or be no larger than twelve (12) square feet and shall be mounted at least three feet (3') above the ground.

5. For consistency, said sign shall read as follows:

NOTICE
PUBLIC HEARING FOR THIS PARCEL
WILL BE HELD
For more information call:
Village of Oak Brook 630-368-5103

6. Any applicant requesting the subdivision of a parcel shall also provide notice by posting a sign on the subject property in a manner consistent with the requirements for posting public hearing signs. (Ord. G-764, 11-9-2004; per correspondence dated 2-20-2009)

Notes

1 1. 65 ILCS 5/11-13-1 et seq.

CHAPTER 15
PLANNED DEVELOPMENTS

SECTION:

13-15-1: Intent And Purpose

13-15-2: General Provisions

13-15-3: Planned Development Standards

13-15-4: Site Development Allowances

13-15-5 : Procedures

13-15-6 : Application Requirements

13-15-7: Effect Of Approval Or Denial

13-15-8: Amendments And Changes To Approved Planned Development Permits

13-15-1 : INTENT AND PURPOSE:

The purpose of the regulations, standards, and criteria contained in this chapter is to provide an alternate zoning procedure under which land can be developed or redeveloped with innovation, imagination, and creative architectural design when sufficiently justified under the provisions of this chapter. The objective of the planned development is to encourage a higher level of design and amenity than is possible to achieve under standard zoning regulations. The end result is intended to be a product which fulfills the objectives of the village of Oak Brook commercial areas revitalization master plan and planning policies of the village while allowing flexibility from the standard application of the use and bulk regulations of the zoning regulations. The planned development is intended to permit and encourage flexibility and to accomplish the following specific purposes, among others:

A. To stimulate creative approaches to the commercial, nonsingle-family residential, and commercial/mixed use development of land.

B. To provide more efficient use of land.

C. To preserve natural features and provide open space areas and recreation areas in excess of those required under standard zoning regulations.

D. To develop and implement new approaches to the living environment through variety in type, design and layout of buildings, transportation systems, and public facilities.

E. To unify building and structures through design.

F. To promote long term planning pursuant to the village's ~~commercial areas revitalization master~~ Comprehensive plan, which will allow harmonious and compatible land uses or combination of uses with surrounding areas. (Ord. G-890, 7-14-2009)

13-15-2 : GENERAL PROVISIONS:

A. Except as provided for in subsection 13-15-5E of this chapter, no new commercial, office, or mixed use development construction within the planned development overlay district shall be permitted except as approved as a planned development in accordance with this chapter; provided, however, that a stand alone project for construction of outdoor dining facilities or for drive-through facilities will not require a planned development under this chapter.

B. Each planned development shall be presented and reviewed on its own merits. It shall not be sufficient justification for approval of a planned development to rely on an already existing planned development, except to the extent that the existing planned development and the proposed planned development are part of an approved unified, phased, or master development plan.

C. The burden of providing evidence and persuasion that any planned development is necessary and desirable shall in every case rest with the applicant.

D. Buildings and uses or combinations of uses within a planned development shall be limited solely to those approved as part of the ordinance granting a planned development; provided, however, that any buildings and uses or combinations of uses in compliance with a unified, phased, or master development plan approved as part of the ordinance granting a planned development may be approved by the corporate authorities.

E. To the extent provided in the ordinance approving a proposed planned development, the proposed planned development need not comply with the density, dimension, area, bulk, use, and other zoning regulations that, but for the provisions of this chapter, would otherwise apply to the property on which the proposed planned development is intended. Modifications and departures from the standard zoning provisions may be provided in accordance with the provisions of this chapter and to the extent that they will not be detrimental to or endanger the public health, safety, morals, comfort, or general welfare. (Ord. G-890, 7-14-2009; Ord. G-904, 11-10-2009)

13-15-3 : PLANNED DEVELOPMENT STANDARDS:

A. Planned Developments Are Not Permitted As Of Right: Planned developments shall be approved by the village only in direct response to the accrual of tangible public benefits from the planned development to the village and its residents, along with the neighborhood and area in which the planned development is proposed. These benefits shall include, without limitation, exceptional amenities, landscape features, architectural or site design,

or the conservation of special manmade or natural features of the site, all as more specifically set forth in the standards set forth in subsection B of this section.

B. General Design Standards: No application for a planned development shall be approved by the corporate authorities unless the proposed planned development satisfies the standards set forth in this subsection B and subsection C of this section. All of these standards shall not be regarded as inflexible, but shall be used as a framework by the village to test the quality of the amenities, benefits to the community, and design and desirability of the proposal.

1. ~~Commercial Areas Revitalization Master~~ Comprehensive Plan: The planned development shall not be inconsistent with the planning policies, goals, objectives, and provisions of the village's ~~commercial areas revitalization master~~ Comprehensive plan. A planned development must also not be inconsistent with the intent and spirit of the village of Oak Brook comprehensive plan.

2. Public Welfare: The planned development shall be designed, located, and proposed to be operated and maintained so that it will not impair an adequate supply of light and air to adjacent property and will not substantially increase the danger of fire or otherwise endanger the public health, safety and welfare.

3. Impact On Other Property: The planned development shall not be unnecessarily injurious to the use or enjoyment of other property in the neighborhood for the purposes permitted pursuant to the applicable zoning district, shall not prevent the normal and orderly development and improvement of surrounding properties for permitted uses, shall not be inconsistent with the community character of the neighborhood, shall not alter the essential character of the neighborhood, and shall not substantially diminish or impair property values within the neighborhood, or be incompatible with other property in the immediate vicinity. The uses permitted in a planned development must be of a type and so located so as to exercise no undue detrimental influence upon surrounding properties. The planned development must also address compliance with the village's noise, lighting, and other performance standards.

4. Impact On Public Facilities And Resources: The planned development shall be designed so that adequate utilities, road access, drainage, and other necessary facilities will be provided to serve the development. The planned development shall include such impact donations as may be reasonably determined by the corporate authorities. The required impact donations, including, without limitation, obligations under the village's subdivision regulations, shall be calculated in reasonable proportion to the impact of the planned development on public facilities and infrastructure to the extent permitted by law.

5. Archaeological, Historical Or Cultural Impact: The planned development shall not substantially and adversely affect a known archaeological, historical, or cultural resource located on or off of the parcel proposed for development.

6. Parking And Traffic: The planned development shall have or make adequate provision to provide ingress and egress to the proposed use in a manner that minimizes

traffic congestion in the public streets, provides appropriate cross access to adjacent properties and parking areas, and provides adequate access for emergency vehicles.

7. Adequate Buffering: The planned development shall have adequate landscaping, public open space, and other buffering features to protect uses within the development and surrounding properties.

8. Signage: Signage on the site of the planned development shall generally be in conformity with the village's sign regulations (chapter 11 of this title), except as may otherwise be specifically provided in the ordinance approving a planned development.

9. Ownership/Control Area: The site of the planned development must be under ownership and/or unified control of the applicant.

10. Need: A clear showing of need for the planned development must be made by means of an economic feasibility, land utilization and marketing study.

11. Compliance With Subdivision Regulations And Plat Act: All planned developments, whether or not they are by definition subject to the village's subdivision regulations or the Illinois plat act, shall comply with all standards, regulations and procedures of the village's subdivision regulations and the plat act except as is expressly provided otherwise in this chapter, or as otherwise provided by the corporate authorities pursuant to the ordinance approving the planned development, or the applicable sections of the village's subdivision regulations.

12. Covenants And Restrictions To Be Enforceable By Village: All covenants, deed restrictions, easements, and similar restrictions to be recorded in connection with the planned development shall provide that they may not be modified, removed, or released without the express consent of the corporate authorities and that they may be enforced by the village as well as by future landowners within the proposed development.

13. Security And Site Control: The planned development shall include the plans necessary to describe, establish, and maintain appropriate property and building security and site control measures for the planned development and the property on which the planned development is located. These plans shall also include measures to prevent adverse impacts on neighboring properties.

C. Additional Standards: In addition to the standards required in subsection B of this section, the following standards shall be considered in reviewing all proposed and amended planned developments, particularly with regard to elements of planned development proposals that do not satisfy the otherwise applicable provisions of the underlying zoning and subdivision regulations:

1. Integrated Design: A planned development shall be laid out and developed as a unit in accordance with an integrated overall design. This design shall provide for safe, efficient, convenient and harmonious grouping of structures, uses and facilities, and for

appropriate relation of space inside and outside buildings to intended uses and structural features.

2. Beneficial Common Open Space: Any common open space in the planned development shall be integrated into the overall design. These open spaces shall have a direct functional or visual relationship to the main building(s) and shall not be of isolated or leftover character. The following would not be considered usable common open space:

a. Areas reserved for the exclusive use or benefit of an individual tenant or owner.

b. Dedicated streets, alleys and other public rights of way.

c. Vehicular drives, parking, loading and storage areas.

d. Irregular or unusable narrow strips of land.

3. Functional And Mechanical Features: Exposed storage areas, trash and garbage retainers, exposed machinery installations, service areas, truck loading areas, utility buildings and structures, and similar accessory areas and structures shall be accounted for in the design of the planned development and made as unobtrusive as possible. These features shall be subject to such setbacks, special planting or other screening methods as shall reasonably be required to prevent their being incongruous with the existing or contemplated environment and the surrounding properties.

4. Visual And Acoustical Privacy: The planned development shall provide reasonable visual, and acoustical privacy. Fences, insulations, walks, barriers and landscaping shall be used as appropriate for the protection and aesthetic enhancement of property and the privacy of its occupants, screening of objectionable view or uses, and reduction of noises.

5. Energy Efficient Design: A planned development shall be designed with consideration given to various methods of site design and building location, architectural design of individual structures, and landscaping design capable of reducing energy consumption within the planned development. The applicant will be encouraged, to the extent feasible, to obtain leadership in energy and environmental design ("LEED") certification for the project. A planned development applicant may also undertake the following:

a. Having at least one member of the applicant's project team be a "LEED accredited professional" - a person who has received the LEED accredited professional designation from the United States green building council ("USGBC"), the Green Building Certification Institute, or another entity authorized by the USGBC to grant that designation.

b. Having its application materials include a "LEED checklist" developed by the U.S. green building council indicating the credits pursued and total points anticipated for a project under the most appropriate LEED rating system, in consultation with the ~~d~~Director of ~~community d~~Development Services.

6. Drives, Parking And Circulation: Principal vehicular access shall be from dedicated public streets, and access points shall be designed to encourage smooth traffic flow with controlled turning movements and minimum hazards to vehicular or pedestrian traffic. With respect to vehicular and pedestrian circulation, including walkways, interior drives and parking, special attention shall be given to location and number of access points to the public streets, width of interior drives and access points, general interior circulation, separation of pedestrian and vehicular traffic, adequate provision for service by emergency vehicles, and arrangement of parking areas that are safe and convenient, and insofar as feasible, do not detract from the design of proposed buildings and structures and the neighboring properties. To the extent practical, planned developments shall provide connections to and from existing bike and walking paths so as to ensure a continuous route without gaps or disconnections.

7. Surface Water Drainage: Special attention shall be given to proper site surface drainage so that removal of surface waters will not adversely affect neighboring properties or the public storm drainage system. Surface water in all paved areas shall be collected at intervals so that it will not obstruct the flow of vehicular or pedestrian traffic. (Ord. G-890, 7-14-2009)

13-15-4 : SITE DEVELOPMENT ALLOWANCES:

Proposed site development characteristics that are not consistent with the zoning regulations otherwise applicable to the property on which a planned development or planned development amendment is proposed, may be approved in accordance with this chapter as part of the ordinance approving the planned development or planned development amendment. The applicant shall specifically identify each site development departure and demonstrate how each departure will be compatible with surrounding development and is not inconsistent with the planned development standards set forth in section 13-15-3 of this chapter. Each departure shall be specifically stated and approved in the ordinance approving the planned development or planned development amendment. Any approved departures from the otherwise applicable zoning regulations shall not be deemed a nonconformity and shall not require a variation. (Ord. G-890, 7-14-2009)

13-15-5 : PROCEDURES:

The following procedures are required to assure the orderly review of every planned development application in a timely and equitable manner:

A. Preliminary Board Review:

1. A prospective applicant, prior to meeting with village staff for a formal prefiling review, shall appear before the corporate authorities for a preliminary board review. At a

minimum, the applicant shall provide the following materials to the corporate authorities for its preliminary review: a) a preliminary concept plan of the development, and b) a brief narrative describing the overall character, intensity, uses, and nature of the proposed planned development. Prior to submission to the corporate authorities, the ~~community development director~~ Director of Development Services will review the materials to confirm that the materials provide sufficient information to adequately inform the corporate authorities of the nature and scope of the proposed planned development. If sufficient information is provided, the applicant shall coordinate with the village manager to be placed on a corporate authorities agenda and scheduled for the earliest appropriate corporate authorities meeting.

2. The purpose of the preliminary board review shall be to broadly acquaint the corporate authorities with the applicant's proposal and to provide the applicant with any preliminary views or concerns that members of the corporate authorities may have at a time in the process when positions are still flexible and adjustment is still possible and prior to the time when the applicant is required to expend the funds necessary to prepare the complete documentation required for a formal application.

3. At the meeting at which the preliminary board review is conducted, any member of the corporate authorities may make any comments, suggestions or recommendations regarding the preliminary development concept plan deemed necessary or appropriate by that member; provided, however, that no final or binding action shall be taken with respect to any preliminary application. Any views expressed in the course of the corporate authorities' review of any preliminary development concept plan shall be deemed to be only preliminary and advisory and only the individual views of the member expressing them. Nothing said or done in the course of such review shall be deemed to create, or to prejudice, any rights of the applicant or to obligate the corporate authorities, or any member of it, to approve or deny any formal application following full consideration as required by this chapter.

B. Prefiling Review And Transmittal Of Application:

1. Conference:

a. Following the preliminary board review, a prospective applicant, prior to submitting a formal application for a planned development, shall meet for a prefiling review conference with the village manager, the ~~community development director~~ Director of Development Services, and any other village official or employee designated by the village manager. The purpose of the conference is to assist the applicant in understanding the ~~commercial areas revitalization master~~ Comprehensive plan, the requirements of this chapter, the zoning regulations, the site development allowances, the standards by which the application will be evaluated, and the application requirements.

b. After reviewing the planned development process, the applicant may request a waiver of any application requirement which in the applicant's judgment should not apply to the proposed planned development. The justification for a waiver must be that the

application requirement should not apply because it does not relate and is not necessary given the nature and scope of the proposed planned development. All requests for application waivers shall be made in writing to the ~~community development director~~ Director of Development Services prior to the submission of the formal application documents.

c. All requests for waiver shall be reviewed by the ~~community development director~~ Director of Development Services, who will make a final determination regarding the waiver within fifteen (15) working days of receipt of the request.

d. If deemed appropriate by the ~~community development director~~ Director of Development Services, the applicant, prior to submitting a formal application for a planned development, will schedule a public meeting to discuss the proposed planned development and the nature and extent of impact, if any, on area residents. If a meeting is required, the applicant shall send a written notice of the meeting via certified mail to all taxpayers of record and residents for all property within five hundred feet (500') of the proposed planned development. The notice shall be mailed not more than thirty (30) nor less than fifteen (15) days prior to the date of the meeting. A copy of the notice and mailing list shall be provided to the ~~community development director~~ Director of Development Services. A written summary of comments made at the meeting shall be maintained and submitted by the applicant with the application.

2. Filing Of Application: Following the completion of the prefiling review conference, the applicant shall file an application for a planned development in accordance with this chapter. The ~~community development director~~ Director of Development Services shall deliver copies of the application to other appropriate village departments for review and comment.

3. Deficiencies: The ~~community development director~~ Director of Development Services shall determine whether the application is complete. If the ~~community development director~~ Director of Development Services determines that the application is not complete, then the ~~community development director~~ Director of Development Services shall notify the applicant in writing of the deficiencies and shall take no further steps to process the application until the deficiencies are remedied.

4. Report On Compliance: A copy of the complete application and a written report incorporating the comments of village staff and other agencies regarding the compliance of the proposed planned development with the requirements and standards of this chapter shall be delivered to the planned development commission prior to the public hearing required by subsection C of this section.

5. Determination Not Binding: Neither the ~~community development director's~~ Director of Development Services determination that an application is complete nor any comment made by the ~~community development director~~ Director of Development Services or village staff at a prefiling review conference or as part of the review process shall be intended or construed as a formal or informal recommendation for or against the approval of a

proposed planned development, or any component part thereof, nor shall they be intended or construed as a binding decision of the village, the ~~planned development commission~~ Planning and Zoning Commission, or village staff.

6. The application will be referred to P&Z Commission by the Village Board.

C. Review And Action By The ~~Planned Development Commission~~ Planning and Zoning Commission:

1. Upon receiving the report from the ~~community development director~~ Director of Development services, and referral from the Village Board, the ~~planned development commission~~ Planning and Zoning Commission shall hold a public hearing on the proposed planned development.

2. Notice of the required public hearing shall be published by the village, at the applicant's expense, not more than thirty (30) nor less than fifteen (15) days before the scheduled hearing in a newspaper of general circulation in the village and shall contain the following information:

a. The identification number designation of the application;

b. The date and time of the public hearing;

c. The location of the public hearing; and

d. The general location of the property, the legal description of the property and its street address, if applicable, and a short description of the proposed planned development and purpose of the public hearing.

3. Notice of the required public hearing shall also be provided by the village, at the applicant's expense, by posting a sign or signs on the property not more than thirty (30) days nor less than fifteen (15) days prior to the public hearing. The sign shall be weatherproof and contain the information as is required in subsection C2 of this section. Failure to post the sign(s) and/or the inadvertent removal or knocking down (by the village or others) of the sign after posting but before the public hearing shall not invalidate, impair, or otherwise affect any planned development subsequently granted following the public hearing, nor shall it require a postponement of the public hearing.

4. Notice of the required public hearing shall also be provided by the applicant by certified U.S. mail, return receipt requested, to the taxpayers of record and owners of record of the property which is the subject of the application (if different than the applicant), and the taxpayers of record and residents of all property within five hundred feet (500') of the subject property. The notice shall contain the information as is required in subsection C2 of this section and shall be mailed not more than thirty (30) nor less than fifteen (15) days prior to the date of the public hearing. The notice shall also include the name and address and phone number of the applicant for the planned development.

5. The transcript of testimony, if any, the commission's minutes, all applications, requests, exhibits, and papers filed in the proceeding before the commission, and the decision and report, or reports, of the commission shall constitute the record for that particular application.

6. The ~~planned development commission~~ Planning and Zoning Commission shall review the application, the standards and requirements established by this chapter, the report of the ~~community development director~~ Director of Development Services, and any oral and written comments and testimony received by the planned development commission before and at the public hearing. The ~~planned development commission~~ Planning and Zoning Commission shall recommend approval, approval with conditions, or disapproval of the proposed planned development.

7. Every recommendation of the commission upon any application filed pursuant to this chapter ~~shall be by a written resolution and~~ shall include such findings of fact and conclusions as the commission shall deem necessary. The ~~resolutions~~ findings shall generally refer to the evidence in the record and to the exhibits, plans, or specifications upon which the recommendation is based. The ~~resolutions~~ findings shall generally specify the reason or reasons for the recommendation and shall contain a conclusion or statement separate from the findings setting forth the recommendation of the commission. ~~Every resolution~~ The findings shall expressly set forth any limitations or conditions recommended by the commission. In order to make a recommendation to approve (with or without conditions) or a recommendation to deny a proposed planned development or an amendment to an existing planned development, the affirmative vote of a majority of all members of the commission then holding office shall be required.

D. Review And Action By The Corporate Authorities:

1. Within sixty (60) days of receipt of the report and recommendation of the ~~planned development commission~~ Planning and Zoning Commission, and without further public hearing, the corporate authorities shall, at a minimum, commence consideration of the proposed planned development. The corporate authorities will attempt to conclude its consideration and render a final decision as soon as possible within that sixty (60) day time period, but may extend its consideration as necessary to allow a full and complete review and consideration of the proposed planned development. Following its consideration, the corporate authorities shall: a) deny the application; b) refer the application back to the ~~planned development commission~~ Planning and Zoning Commission for further review and, if necessary, additional public hearings; c) postpone further consideration pending the submittal of additional information, including any application requirement previously waived but deemed necessary by the village for its consideration; or d) adopt an ordinance approving the planned development.

2. Any action taken by the corporate authorities pursuant to subsection D1 of this section shall require the concurrence of a majority of the corporate authorities; provided, however, that any proposed planned development that does not receive a recommendation of approval (with or without conditions) from the ~~planned development commission~~ Planning and Zoning Commission shall not be approved by the corporate

authorities except by the affirmative vote of two- thirds (2/3) of the corporate authorities.

3. In approving a planned development, the corporate authorities may attach such conditions to the approval as it deems necessary to have the proposed use or combination of uses meet the standards set forth in this chapter and to prevent or minimize adverse effects on other property in the immediate vicinity. The conditions may include, but are not limited to: impact donations and other related fees or property or monetary contributions; limitations on size, bulk, location, and setbacks; requirements for landscaping, signage, and outdoor lighting; provisions for adequate ingress and egress; hours of operation; and such other conditions as the corporate authorities may deem necessary in furtherance of the objectives of this chapter.

E. Exemptions: At the election of the applicant, the planned development provisions of this chapter shall not apply to an existing development or a proposed development project that satisfies all of the underlying zoning regulations applicable to the property. In such case, the proposed development will be subject to the processes of the village that are applicable to any new construction project. (Ord. G-890, 7-14-2009; Ord. G-904, 11-10-2009)

13-15-6 : APPLICATION REQUIREMENTS:

A. Owner To File Application: The application for a planned development must be filed by the owner of the property on which the planned development is proposed to be located or any person or entity having a contractual interest in the property. If the application is not filed by the owner, the owner must, at a minimum, confirm to the village in writing that the owner has authorized the applicant to apply for the proposed planned development.

B. Information Required: Applications for a planned development shall be filed with the ~~community development director~~ Director of Development Services in such form and accompanied by such information, with sufficient copies, as shall be established from time to time by the village. Every application shall contain, at a minimum, the following information and related data:

1. The names and addresses of the owner(s) of the subject property and the applicant(s).

2. A statement from the owner of the subject property, if not the applicant, approving of the filing of the application by the applicant.

3. A survey of, and legal description and street address for, the subject property.

4. A statement demonstrating compliance of the proposed planned development with the ~~commercial areas revitalization master~~ Comprehensive plan, and evidence of the proposed project's compliance in specific detail with each of the standards for planned developments provided in this chapter.

5. A scaled site plan showing the existing contiguous land uses, natural topographic features, zoning districts, public thoroughfares, and transportation and utilities.

6. A scaled site plan of the proposed planned development showing lot area, the required yards and setbacks, contour lines, common space, and the location, floor area ratio, lot area coverage and heights of buildings and structures, number of parking spaces and loading areas.

7. Schematic drawings illustrating the design and character of the building elevations, types of construction, and floor plans for all proposed buildings and structures. The drawings shall also include a schedule showing the number, type, and floor area for all uses or combinations of uses, and the floor area for the entire proposed planned development.

8. A landscaping plan showing the location, size, character, and composition of vegetation and other material.

9. The substance of existing covenants, easements, and other restrictions, and any to be imposed, on the use of land, including common open space, and buildings or structures.

10. A schedule showing the approximate date for beginning and completion of each stage of construction of the planned development.

11. A professional traffic study acceptable to the village showing the proposed traffic circulation pattern within and in the vicinity of the area of the planned development, including the location and description of public improvements to be installed, and any streets and access easements.

12. A professional environmental impact study identifying and describing the nature and extent of noise, light, and other potential environmental impacts associated with the planned development and the property on which the planned development is located, and the plans necessary to address those impacts.

13. A professional economic analysis acceptable to the village, including the following:

a. The financial capability of the applicant to complete the proposed planned development;

b. Evidence of the project's economic viability; and

c. A comprehensive analysis summarizing the economic impact the proposed planned development will have upon the village.

14. Copies of all environmental impact studies as required by law.

15. An analysis setting forth the anticipated demand on all village services resulting from the proposed planned development.

16. A plan showing off site utility improvements required to serve the planned development, and a report showing the cost allocations and funding sources for those improvements.

17. A site drainage and stormwater detention and maintenance plan for the proposed planned development.

18. A photometric/lighting plan for the proposed planned development.

19. A written summary of residents' comments pertaining to the proposed application from any public meeting or hearing held pursuant to subsection 13-15-5B or C of this chapter.

20. Plans necessary to describe, establish, and maintain appropriate property and building security and site control measures for the planned development and the property on which the planned development is located. These plans shall also include measures to prevent adverse impacts on neighboring properties.

C. Fees:

1. General Fees: Each application for a planned development shall be accompanied by a fee in the amount established by the corporate authorities from time to time payable to the order of the village to defray the costs and expenses of the planned development procedures, and any other filing or other charges established pursuant to this subsection.

2. Additional Cost Recovery: Every application filed for a planned development pursuant to this chapter that requires the village to incur third party costs or expenses, including, without limitation, legal fees incurred by the office of the village attorney or any attorney or firm retained by the village, shall be subject to the cost recovery fee and lien provisions set forth in this subsection. The cost recovery fee shall be in addition to the general fees.

3. Responsibility For Payment: The owner of the property that is the subject of the application and, if different, the applicant, shall be jointly and severally liable for the payment of the general fees, the cost recovery fee, and for the cost recovery lien. By signing and authorizing the application, the owner or applicant shall be deemed to have agreed to pay, and to have consented to, the general fees and cost recovery fee, plus any costs of collection, that have not been paid within thirty (30) days following the mailing of a written demand for payment to the owner or applicant at the address set forth on the application, including any additional cost recovery fees assessed herein. Any lien filed pursuant to this subsection may be foreclosed in the manner provided for mortgages or mechanics' liens under Illinois law.

4. Recoverable Costs: For purposes of calculating the cost recovery fee and general fees, the costs incurred by the village with respect to the following items shall be deemed to be the "actual costs" incurred by the village in processing an application for a planned development:

a. Publication and mailing of notices;

b. Court reporter and recording secretarial services;

c. Professional and technical consultant services;

d. Village attorney, or other village related attorney or law firm, consultation, meeting attendance, document preparation, and review;

e. Copy reproduction;

f. Document recordation; and

g. Inspection fees.

5. Escrow: For each application filed and processed pursuant to this chapter that requires the village to incur third party costs or expenses, an application fee escrow account shall be established as provided below:

a. Initial Deposit: Every petition filed that requires the village to incur third party costs or expenses shall be accompanied by an initial deposit for purposes of paying additional application fees. The amount of the initial deposit shall be determined by the village manager, and the initial deposit and any subsequent deposit shall be placed in an application fee escrow account. No interest shall be payable on any such escrow account.

b. Draws From Escrow: From the date of filing of any application, the village shall maintain an accurate record of the actual costs of processing and reviewing the application. The village shall, from time to time, draw funds from the escrow account established to pay costs identified in subsection C4 of this section and shall transfer funds to the appropriate village accounts. The village shall maintain an accurate record of all draws.

c. Additional Deposits: Should the village at any time determine that the escrow account established in connection with any application is, or is likely to become, insufficient to pay the actual costs of processing an application, the village shall inform the applicant of that fact in writing and demand an additional deposit in an amount deemed to be sufficient to cover foreseeable additional costs. Unless and until such additional amount is deposited by the applicant, the village may direct that processing of the application be suspended or terminated. Any termination shall be deemed a withdrawal of the application by the applicant.

d. Final Settlement: As soon as reasonably feasible following final action on an application, the village shall cause a final accounting to be made of the escrow deposits made in connection with the application and the actual costs of processing the application and shall make a final charge of costs against the escrow deposit. A copy of the accounting shall be provided to the applicant. If the amount in the escrow is insufficient to pay the total actual costs, a written demand for payment of the balance due shall be mailed to the applicant. If any unused balance remains in the escrow account after paying the total actual costs, that amount shall be returned to the applicant.

6. Waiver For Specified Public And Charitable Bodies: The provisions of this subsection may be waived by the corporate authorities for fees applicable to any application filed by

any public body, or any agency deriving the majority of its revenues from taxes levied within the village, or any charitable or eleemosynary organization.

7. Condition Of All Planned Development Applications And Approvals: No application filed pursuant to this chapter shall be considered complete unless and until all fees due pursuant to this subsection C have been paid. Every approval granted and every permit issued pursuant to this chapter shall, whether or not expressly so conditioned, be deemed to be conditioned upon payment of cost recovery fees as required by this subsection C.

8. Time Periods: Where this chapter provides that the passage of time without decision or action shall be deemed an approval or recommendation for approval, all time periods shall be tolled during any period of nonpayment, but shall otherwise continue to run.

9. Failure To Pay: The failure to fully pay cost recovery fees when due shall be grounds for refusing to process an application and for denying or revoking any planned development approval sought or issued with respect to the land or development to which the unpaid fee relates. (Ord. G-890, 7-14-2009)

13-15-7 : EFFECT OF APPROVAL OR DENIAL:

A. Approval of the planned development by the corporate authorities authorizes the applicant to proceed with any necessary applications for building permits, certificates of occupancy, and other permits which the village may require for the proposed planned development. The village's ~~community development director~~ Director of Development Services shall review applications for these permits for compliance with the terms of the planned development granted by the corporate authorities and other applicable requirements. No permit shall be issued for development which does not comply with the applicable requirements of law, including, without limitation, the terms and conditions of the planned development ordinance approved by the corporate authorities.

B. The village shall administratively revise the official zoning map to properly note the existence and boundaries of each approved planned development; provided, however, that any such notation of a planned development shall not constitute a map amendment to the official zoning map.

C. Subject to subsection G of this section, the corporate authorities may declare the approval of a planned development null and void if the recipient does not file a complete application for a building permit relative to the proposed planned development within nine (9) months after the date of adoption of the ordinance approving the planned development.

D. Subject to subsection G of this section, the corporate authorities may declare the approval of a planned development null and void if construction has not commenced within twenty four (24) months, and is not completed within thirty six (36) months, after the date of adoption of the ordinance approving the planned development, except as may otherwise be provided in the ordinance approving the planned development.

E. Subject to subsection G of this section, the corporate authorities may declare the approval of a planned development with a phasing plan null and void if construction has not commenced and is not completed in accordance with the terms of the phasing plan.

F. Subject to subsection G of this section, the corporate authorities may declare the approval of a planned development with a master development plan null and void if construction has not commenced and is not completed in accordance with the terms and conditions contained in the master development plan.

G. An extension of the time requirements provided pursuant to subsections C, D, E, and F of this section may be granted by the corporate authorities for good cause shown by the applicant, provided a written request is filed with the village at least four (4) weeks prior to the respective deadline.

H. The corporate authorities may declare the approval of a planned development null and void if the use or combination of uses for which the approval was granted ceases for a consecutive period of one year.

I. No application for a planned development which was previously denied by the corporate authorities shall be considered by the planned development commission or the corporate authorities if it is resubmitted in substantially the same form and content within one year of the date of such prior denial.

1. The ~~community development director~~ Director of Development Services shall review the application for a planned development and determine if the application is or is not substantially the same as a previously denied application. An applicant has the right to request a meeting before the corporate authorities to appeal the determination of the ~~community development director~~ Director of Development Services that the application is substantially the same, provided a petition for appeal is filed in writing with the village manager within ten (10) days after the ~~community development director's~~ Director of Development Services determination.

2. The corporate authorities shall affirm or reverse the determination of the ~~community development director~~ Director of Development Services, regarding whether the new application is substantially the same as a previous application, within forty five (45) days after receipt of the appeal.

3. If it is determined that the new application is not substantially the same, then the applicant shall be entitled to continue with the application process and have the application reviewed in accordance with the provisions of this chapter. (Ord. G-890, 7-14-2009)

13-15-8 : AMENDMENTS AND CHANGES TO APPROVED PLANNED DEVELOPMENT PERMITS:

A. Major Change. Except for those specific alterations that meet the standards to qualify as a "minor change~~s~~" as provided in subsection B, or an administrative change as provided in subsection C ~~of this section~~, any amendments or modifications to an approved planned development or any addition to or expansion of an existing planned development shall require separate review and approval under the provisions applicable to the initial approval of a planned development.

B. A "minor change" is any change in the site plan or design details of an approved planned development which is consistent with the standards and conditions applicable to the planned development and which does not alter the concept or intent of the planned development, but does not meet the standards of an "Administrative Change" in subsection C. ~~A minor change shall not increase the planned development's density, add new uses, increase any applicable bulk regulation, reduce open space, modify the proportion of housing types, change or add new parking areas, alter alignment of roads, utilities or drainage, amend final development agreements, provisions or covenants, or provide any other change inconsistent with any standard or condition imposed by the corporate authorities in approving the planned development.~~ A developer's request for M~~m~~inor C~~c~~hange ~~may be approved by the village manager, following receipt of a recommendation~~ must be accompanied by an accurate schematic and descriptive narrative of the proposed changes (the " Minor Change Request"). ~~of~~ T~~t~~he ~~community development director~~ Director of Development Services shall make a written recommendation (the "Written Recommendation") to the Village Manager who shall then submit the Minor Change Request and Written Recommendation to the Village President and Board of Trustees (collectively the "Corporate Authorities") for review, such review period not to exceed seven (7) calendar days (the "Notice Period"). At the conclusion of the Notice Period:~~, without obtaining separate approval by the corporate authorities.~~

1. If less than two members of the Corporate Authorities provide a written objection to the Village Manager, the Written Recommendation shall be deemed acceptable and the Minor Change Request shall be approved by the Village Manager;
2. If two or more members of the Corporate Authorities provide a written objection to the Village Manager, the Written Recommendation and Minor Change Request shall be referred to the Corporate Authorities at next available Village Board of Trustees meeting for discussion and/or referral to the Planning and Zoning Commission. At the meeting:
    a. If the Corporate Authorities, by majority vote present at such meeting, vote in favor to refer to the Minor Change Request to the Planning and Zoning Commission, then such request shall be deemed a Major Change, requiring separate review and approval under the provisions applicable to the initial approval of a planned development.
    b. Any failed vote, by majority present at such meeting, to vote in favor to refer the Minor Change Request to the Planning and Zoning Commission shall be deemed acceptance of the Written Recommendation and the Minor Change Request shall be approved by the Village Manager.

C. Administrative Change. An "Administrative Change" is a nominal change in the site plan or design details of an approved planned development which is consistent with the standards and conditions applicable to the planned development and which does not materially alter the concept or intent of the planned development. Nominal changes shall be defined as minor shifting of elements within the plan which are otherwise unrecognizable to the general public. Such nominal changes may include shifting of landscape elements, without reduction in number, substantially similar material substitutions, minor architectural modifications such as shifting or rearrangement of features without reduction in the quality of materials or design, or shifting of underground utilities. An Administrative Change may be approved by the Village Manager following receipt of a written recommendation (the "Written Recommendation") of the Director of Development Services.

D. The standard to apply to changes outlined in subsections B and C of this section shall include any material change, which shall be defined as any change where there is a substantial likelihood that such change, when viewed by a reasonable person, would result in an outcome that: (i) is inconsistent with the standards and conditions applicable to the planned development; or (ii) alters the concept or intent of the planned development. The following changes shall be deemed to be material for purposes of this section and specifically excluded from the scope of an Administrative Change or a Minor Change:

1. Any increase the planned development's density (including but not limited to FAR or Lot Coverage);
2. Any addition of any new uses not otherwise permitted by the underlying Zoning District;
3. Any increase in any applicable bulk regulation;
4. Any reduction in open space;
5. Any modification of the proportion of units and/or bedroom counts

~~C~~ E. The provisions and limitations of subsections A through ~~and B~~D of this section are subject to such additional conditions and provisions as the corporate authorities may include in the ordinance approving a planned development.

Under Title 13, Chapter 18 (New Chapter)

LANDSCAPE STANDARDS

13-18-1 : PURPOSE
13-18-2 : SCOPE OF REGULATIONS
13-18-3 : LANDSCAPING REQUIREMENTS
13-18-4 : ENERGY CONSERVATION AND GREEN BUILDING

13-18-1: PURPOSE:

The regulations of this Chapter 18 are intended to establish a comprehensive set of procedures, standards and guidelines for the appearance, design, landscaping, and environmental quality of properties within the Village, and to further:

Promote the public health, safety, and general welfare of the citizens of the Village;

Promote orderly community development, as well as encourage both high quality and innovative designs;

Protect and enhance property values;

Protect and enhance the social, cultural, economic, environmental and aesthetic development of the community; and

Ensure that the Village remains a safe and attractive community in which to reside and operate a business.

13-18-2: SCOPE OF REGULATIONS:

The provisions of this chapter 18 shall apply as follows:

A. All new commercial construction and additions to existing structures shall provide a landscaping plan.

B. Landscaping of accessory off-street parking and off-street loading facilities shall be provided as required by the regulations of this chapter 18 for all uses and structures established in each district after the effective date hereof, subject to the limitations set forth in this Section 13-18-2.

C. Where a building permit has been issued prior to the effective date hereof, and construction is begun within ninety (90) days after such effective date and diligently

prosecuted to completion, landscaping of parking and loading facilities as required for the issuance of said building permit may be provided in lieu of any different amounts required by this chapter.

D. When the intensity of use of any structure or premises is increased through the addition of dwelling units, gross floor area or seating capacity, landscaping shall be provided in the amount required by this chapter for the additional parking and loading facilities, if any, required under Section 13-12-1(B).

E. Whenever the existing use of a structure shall hereafter be changed to a new use, landscaping shall be provided as required herein for the additional parking and loading facilities, if any, required under Section 13-12-1(C) for such new use.

F. Existing Parking Facilities: Landscaping of accessory off street parking facilities in existence on the effective date hereof and located on the same lot as the structure or use served shall not hereafter be reduced below the requirements for a similar new structure or use under the provisions of this chapter 18.

13-18-3: LANDSCAPING REQUIREMENTS:

A. Chapter 4 of Title 8, Trees and Shrubs, should be referenced for general requirements for landscaping in the public right-of-way, obstructions of public areas from landscaping on private property, and treatment of diseased trees.

B. Landscape Plan Requirements. All landscape plans so submitted shall be at an appropriate scale, not smaller than 1 inch = 20 feet. Completed landscape plans shall contain information including but not limited to: detailed landscape site plan information; detailed schedule of landscape materials; and irrigation plans, as outlined below:

1. Title Block.
2. Name and Address of the property owner/petitioner.
3. Name of Registered Landscape Architect /Contractor.
4. Landscape Architect's /Contractor's firm name and address.
5. Scale data, north arrow and date and date of any revisions.
6. All site plan information as required in Chapter 18, Section 2; Location of Existing Conditions and Proposed Landscape Improvements, including:
   a. Identification of all proposed plant materials with planting bed, planters, and planter box locations and dimensions.
   b. Treatment of all ground surfaces (ground covers, sod, seed, seasonal beds,

paving, impervious and pervious materials).

c. Walls and fences (indicating height and material).

d. Parking spaces and driveway aisles.

e. Spot elevations and/or contours, existing and proposed.

f. Berms, with one (1) foot interval contours indicated.

g. Sidewalks and pedestrian paths.

h. Existing tree survey (six (6) inch caliper and above, with drip line), noting trees proposed for removal and planned for preservation.

i. Monument sign locations.

j. Refuse/Recycling disposal areas.

k. Public rights of way/easements, including street widths/drives/approaches.

l. Other exterior landscape amenities including exterior tables and benches.

7. Schedule of proposed and existing landscape material, including:

a. List of all proposed plantings, indicating common and botanical names, caliper, height or size and quantity.

b. List of all existing trees proposed for removal, six (6) inch caliper or greater, indicating caliper, common and botanical names.

c. List of all existing trees, six (6) inch caliper or greater, planned for preservation, indicating caliper size, common and botanical names.

8. Irrigation Plan, including system details and sprinkler head locations, providing for underground irrigation of planting beds or a water supply outlet no greater than one hundred fifty (150) feet from planting beds, if required.

9. Construction erosion control plan.

10. Where applicable, the Development Services department may require less information, or any other additional information to appropriately evaluate compliance of the proposed development or improvement.

C. Planting Design and Preservation Criteria

1. New planting materials used in conformance with the provisions of this Chapter, shall be:

a. Plants approved by the Village of Oak Brook, in accordance with the list of approved trees contained in the public works construction standards, the Ornamental Growers Association of Northern Illinois, or the Illinois Chapter of Landscape Contractors listings.

b. High quality nursery-grown stock. Substandard "B-grade" or "Park Grade" plants are not acceptable.

c. Plants listed as "Do not plant" by the Morton Arboretum are not acceptable.

d. Grown in a climate zone similar to Oak Brook. (i.e., United States Department of Agriculture Zone 5b).

e. Capable of withstanding the extremes of individual site microclimates.

f. Selected for interest in its structure, texture, color and for its ultimate growth.

g. In conformance with the American Standards for Nursery Stock, ANSI Z60.1-Latest Edition.

h. For each plant group (canopy tree, evergreen tree, etc.) there shall be no more than twenty-five percent (25%) of one genus.

i. Existing trees with an eight-inch (8") caliper or greater shall be preserved on the property to the extent possible, as determined by the Development Services department.

j. Evergreens shall be incorporated into the landscape plan and treatment of a site, particularly in required buffers for property zoned residential, the screening of refuse holding areas, and critical points of required parking lot screening.

k. To ensure that landscape materials do not constitute a driving hazard, clear Intersection Sight Distance shall be established at all street intersections and at the intersection of site driveways and streets as required by Bureau of Local Roads and Streets Manual, Chapter 28.

l. Plant materials shall be placed against long expanses of building walls, fences and other barriers to soften their effect. Grouping of plants shall be encouraged.

m. Where site characteristics or property dimensions limit the use or survivability of live landscaping as an effective screen, masonry walls shall be used for required screening subject to the regulations set forth in Chapter 13-3-17 (Fences Regulations).

1) All masonry walls or decorative fencing shall be constructed and installed in a durable fashion and shall have the finished side facing the street or property line.

D. Installation of Plant Materials:

1. Plant materials of all types and species shall be installed in accordance with the minimum technical specifications of the "Illinois Chapter of Landscape Contractors," including the guarantee and replacements sections.

2. Minimum plant sizes at time of installation shall be:

   a. Shade Trees: two and one-half (2 1/2) inch caliper.

   b. Ornamental Trees: two (2) inch caliper or if in clump form, six (6) feet in height.

   c. Evergreen Trees: five (5) feet in height.

   d. Shrubs required for screening: three (3) feet in height; shrubs used for other purposes: eighteen (18) inches in height.

   e. Ground Cover: spaced no less than twelve (12) inches on center.

   f. Perennials: spaced no less than is recommended for the particular species.

3. Plantings on any portion of the public right-of-way provided by an adjacent property owner, association, or individual, that are removed as a result of Village utility construction or maintenance, or other Village activities, may be replaced at the sole responsibility of the property owner, association or individual. The Village shall not be required to replace any plant material in the public right-of-way.

4. Trees, shrubs and other plants are permitted in front, side and rear yards, except:

   1) Where such plants obstruct Intersection Sight Distance as required by Bureau of Local Roads and Streets Manual, Chapter 28

   And/or

   2) As required by 425 ILCS 20 No object shall be constructed, maintained or installed within 48 inches of a fire hydrant. It shall be unlawful to install, maintain, construct or enlarge any barriers, trees, bushes, walls, or other obstacles which may hide or impede the use of a fire hydrant.

E. Minimum Setbacks and Landscape Requirements for Off-Street Parking Lots:

1. Every off-street parking lot or parking area containing five (5) or more parking spaces shall be buffered and screened from public view and adjacent property by a berm and perimeter landscaped area in accordance with the yard setback requirements of Chapter 12, 13-12-3 H. (Off Street Parking Regulations). The minimum parking lot setbacks shall be maintained in accordance with the following schedule:

2. The minimum width for the perimeter screening area shall be measured from the property line and shall not include any parking overhang.

3. No buildings or parking area shall be permitted within a required bufferyard.

4. Screening within the perimeter setback area shall consist of a berm, trees, densely planted hedge, massing of shrubs, and may include a masonry wall and other plant material installed in a manner so as to inhibit public views of the parking area. Landscape materials in perimeter parking areas shall include plants that are salt-tolerant and provide year-around screening. The surface of the perimeter setback area shall be suitably covered with grass, ground cover or similar vegetation and periodically mulched. Impervious materials such as asphalt, concrete or a layer of stone is prohibited. The landscape buffer shall not be used for the purposes of parking, loading, servicing, or storage.

   a. Landscape Requirements for Parking Lots Facing Public Streets and Residential Districts. Landscaping materials within perimeter parking setback areas facing a public street shall contain the following minimum number of plant materials:

      1. Evergreen trees: 1 tree/20 lineal ft.
      2. Evergreen shrubs: 1 shrub/4 lineal ft.
      3. Deciduous shrubs: 1 shrub/4 lineal ft.
      4. Ornamental trees: 1 tree/25 lineal ft.
      5. Shade trees: 1 tree/50 lineal ft.

   b. Landscape Requirements for Parking Lots Not Facing a Public Street or a Residential District. Landscaping materials within perimeter parking setback areas not facing a public street may be reduced by 30% as required in Section E.4.a. above.

   c. Where a fence or masonry wall are provided to effectively screen parking areas, plants providing year-around screening may be reduced.

   d. The minimum berm height shall be 30 inches and shall have average height of five feet (5') with a 3:1 slope. Shrubs and other landscape material shall be planted on berms to provide seasonal color, and to ensure landscape screening is maintained between thirty-six (36") and forty-eight (48") inches height.

5. Perimeter screening of parking areas shall be continuous, except for breaks as may be permitted for pre-existing trees or planned additional trees, sidewalks, driveways and sight triangles.

6. Shrubs, hedges and other perimeter screening material shall be at least three (3) feet in height at time of installation.

7. The surface of the perimeter setback area shall be suitably covered with grass, ground cover or similar vegetation and periodically mulched where appropriate.

8. A six (6) inch continuous poured-in-place concrete curb shall separate all drive and parking surfaces from landscape areas, except where bio-filtration design requires breaks for water inflow.

F. Minimum Landscape and Screening Requirements for Parking Structures:

1. All parking structures shall be landscaped (which includes 1 or more berms) pursuant to a landscape plan prepared by a landscape architect to screen substantially the first level from adjacent streets and other uses. For any parking structure that is four (4) floors or less in height, the landscaped area must be a minimum of ten feet (10') in depth but must average fifteen (15) in depth for all screening. For any parking structure that is in excess of four (4) floors, the landscaped area must be a minimum of twenty feet (20') in depth. Any approved landscape plan required for screening of a parking structure must incorporate evergreens within the plantings and include a maintenance schedule to ensure that any damaged or dead trees, shrubs or ground cover shall be replaced promptly. Regular maintenance of these landscaped areas shall also be required.

G. Interior Landscaping Requirements

1. A planting island equal in area to a parking space shall be located at each end of a parking row, and after each fifteen (15) parking spaces within a parking row.

   a. The maximum spacing requirement between parking spaces and landscaped islands may be varied to allow for a lesser number of larger landscaped islands to be provided, which islands shall be of sufficient size to sustain a diversity of plant material and shall be designed and placed within the parking lot in a non-grid fashion in order to create relief in the monotonous layout of the parking lot.

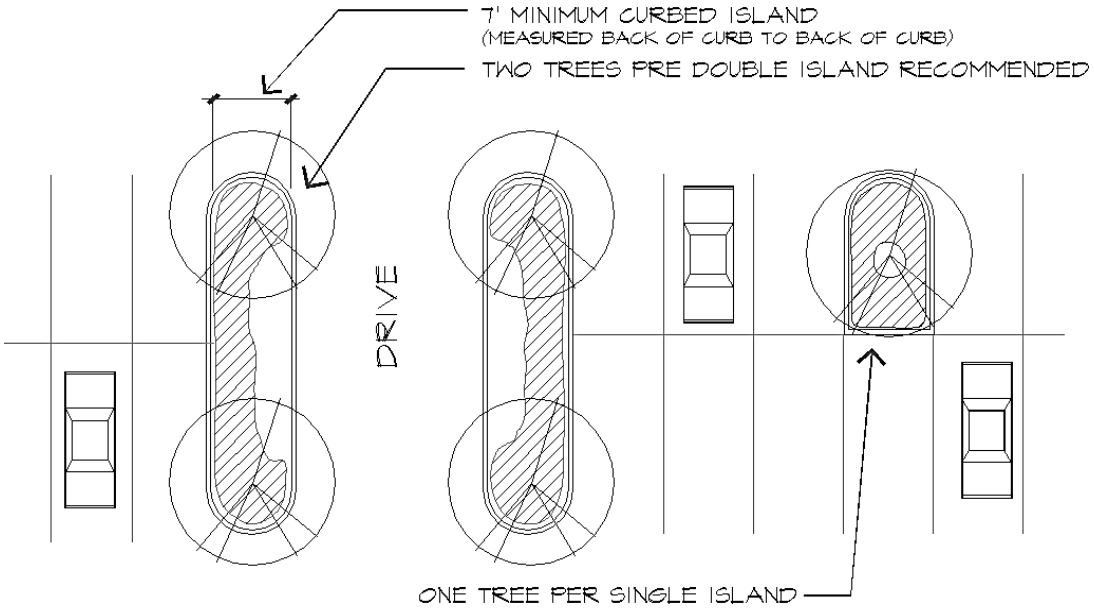

Example of a Planting Island Equal to a Parking Space

2. The total tree count shall be no less than one tree per five parking lot spaces.

3. Landscaped dividers or continuous islands with a minimum width of six (6) feet shall be provided between every three (3) parking bays.

a. The installation of bio-filtration swales for landscaping and stormwater management purposes is encouraged within larger, continuous planning islands. Flood-tolerant plants should be used which will remain healthy when used in bioswales.

Example of a continuous bio-swale planting island

b. Continuous islands help divide large parking areas into smaller parking fields, provide more room for plants to grow, and provide areas for pedestrian access. Trees are recommended to be planted in the continuous landscaped island every 25' on-center.

Each parking island shall include at least one shade tree or evergreen (where visibility is not restricted). At least fifty percent (50%) of the remaining portions of the surface of the planting island shall be covered with sod, plants with seasonal interest, low shrubs, and salt- tolerant ground cover. The remaining area shall contain landscape mulch. A layer of stone or impervious materials such as asphalt and concrete is prohibited.

4. A six (6) inch continuous poured in place curb shall separate and surround all interior landscape island areas, except when designed for bio- filtration purposes.

5. Except those designed as bio-infiltration islands, all landscaped islands shall have a minimum topsoil depth of three (3) feet and mounded to a center height which has a 1 to 3 percent slope above the top of the curb height.

H. Minimum Landscape Requirements for Foundations Plantings

1. For commercial construction, a minimum building foundation landscape area of five (5) feet in width shall be located immediately along the front and sides of all buildings, except for entryways.

2. A six (6) inch curb shall separate all foundation landscape areas from the drive aisle and parking areas.

3. Foundation landscaping shall include a minimum of 1 plant for each 3 lineal feet of the foundation, and shall include a variety of shade trees, ornamental trees, hedges, shrubs, evergreens and ground cover in a manner which accents building entranceways and architectural features, softens large expanses of building walls, and screens mechanical equipment. Landscaping can be linear or grouped.

I. Miscellaneous Landscape Requirements

1. Landscaping of Monument/Ground and Pole/Pylon Signs: For every one square foot of total sign area of the ground and pole sign, one square foot of landscaped area shall be extended at least three feet (3') beyond the sign faces or supporting structures in all directions.

   a. The landscaped area shall consist of plantings such as, but not limited to, shrubs, evergreens, flowering plants and ground cover plants. Landscaping bark, mulch, sod or seeded areas shall not be considered in calculating the square footage of the required landscaped area.
   b. Exposed sign foundations shall be constructed with a finished material such as brick, stone, architectural metal, exposed aggregate or wood. Plain, "bagged" or parged concrete is not an approved finish material.

   c. Landscaping must be maintained in a manner that prevents the screening or blocking of addresses and other information provided on the monument sign.

J. Landscaping and Screening of Ground Mounted Mechanical and Utility Equipment:

1. All ground mounted mechanical equipment, including heating and air conditioning units, generators and pool equipment shall be screened by a solid fence, wall, or densely planted evergreen landscape planting at a maximum height sufficient to obscure such equipment from view from all adjacent streets, and adjacent lots used for residential purposes.

2. All fences installed to satisfy the screening requirement shall comply with the regulations of Title 13, Chapter 3 (Fence Type) and with all other applicable Village

Code regulations.

K. Water Supply; Underground Irrigation: A water supply to irrigate landscaping is required within one hundred fifty (150) feet of all landscaped areas. Installation of an underground irrigation system is recommended.

L. Changes to Approved Landscape Plan: Any change to an approved Landscape Plan shall require the prior approval of the Development Services department, or designee.

M. Landscape Maintenance Required:

1. Property Owners shall be responsible for ongoing maintenance, fertilization, repair and replacement of all vegetation, barriers and landscape planting materials. Landscaping should be properly maintained on a weekly or monthly basis (depending on the plantings) and include seasonal "clean- ups" in the spring and fall, to enhance the built environment in perpetuity.

2. Plants shall be regularly inspected for pests in accordance with Best Management Practices recommended by the Illinois Landscape Contractors Association.

3. Plants shall be pruned, and litter removed in accordance with Best Management Practices recommended by the Illinois Landscape Contractors Association.

4. Replacement plantings shall be no less than the minimum required size or the size indicated in the approved Landscape Plan, whichever is greater.

5. The Property Owner shall make replacement plantings promptly after any plant has died but no later than one hundred twenty (120) days after notification bythe Village of violation of this Ordinance, unless a time extension for inclement weather is given.

6. Planting beds shall be initially, and thereafter periodically, filled with soil and mulched in their entirety, with shredded bark or other organic equivalent.

7. Variations: A Property Owner may file an application for a variation when compliance with the requirements of this Chapter for a new or pre-existing building pose a practical hardship in accordance with the procedures and standards in Chapter 14 of Title 13 (Variations).

13-18-4: ENERGY CONSERVATION AND GREEN BUILDING

A. Energy Efficient Building Design:

1. Multiple-family, commercial, office and industrial construction of green buildings, including LEED certified buildings, is encouraged. All planned development shall comply with the requirements of Chapter 15, Section C.5 (13-15-3C.5)– Energy Efficient Building Design.

2. Energy conserving, energy efficient, and Energy Star products should be selected for non single- family buildings.

3. Building heating, cooling, and power should utilize solar, geothermal, wind, and bio-fuel resources where practical.

4. Construction, demolition, and land clearing debris should be salvaged, reused or recycled.

5. Roof structures with light colored materials to reduce energy loads and extend the life of the roof.

6. Green Roofs that incorporate vegetation on the roof assembly can lead to significant cost savings in thermal insulation, with the added advantages of stormwater runoff control, increased waterproof membrane life, sound insulation and a usable green space on the roof.

B. Site Design:

1. Integrate Natural Resources to ensure contiguous and well-planned open space and preservation of the site's natural resources. A planned development must provide, to the extent possible, for the preservation or creation of unique amenities such as natural streams, stream banks and shore buffers, wooded cover, rough terrain, man-made landforms or landscaping and similar areas.

Stormwater runoff is treated in a series of rain gardens within the parkway of this urban street section

2. The use of permeable paving systems or and naturalized stormwater management best practice systems is encouraged.

Permeable pavers

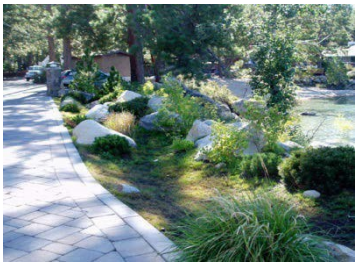

The bioswale filters runoff and reduces the amount of stormwater introduced into the underground sewer system

3. Incorporate transportation solutions that acknowledge the need for bicycle parking and carpool staging.

4. Designated parking, close to the primary building entrance, should be provided for energy-efficient cars and carpools.

5. Multifamily structures should incorporate Electric Vehicle chargers in design.

VILLAGE OF OAK BROOK Illinois

BUTLER GOVERNMENT CENTER
1200 OAK BROOK ROAD
OAK BROOK, ILLINOIS 60523

September 17, 2024

Village President and Board of Trustees
Village of Oak Brook
1200 Oak Brook Road
Oak Brook, IL 60523

Subject: Village of Oak Brook – Universal Zoning Code Regulations– Text Amendment

Dear Village President and Board of Trustees:

Background

The Planning & Zoning Commission completed the required public hearing and deliberations over several meetings, on a petition from the Village of Oak Brook seeking approval of a Universal Zoning Code Regulations.

The Village Board, at its February 27, 2024 meeting, requested that Staff have the Planning & Zoning Commission consider a text amendment to the Zoning Ordinance to revise the Zoning Regulations – Chapter 13.

Attached is a Chart noting the updates. Please see the application and other relevant materials in the case file for additional information regarding the requested text amendment and draft ordinance language.

Public Comment

All interested parties were notified of the public hearing. Several residents and interested parties spoke at several meetings.

Planning & Zoning Discussion and Recommendation

The Planning & Zoning Commission reviewed the proposed text and recommended additional revisions. The draft amendments are found in the casefile.

By a vote of 8 to 0, at the September 4, 2024 meeting, the Planning & Zoning Commission recommended approval of amendments to the Zoning Regulations.

Very truly yours,

Raju Iyer

_____

Rajaraman Iyer
Chairman
Planning & Zoning Commission

Zoning Ordinance Updates

Updated Chapters	Revisions
All Chapters	Title Director of Development Services throughout.
Chapter 2 - Definitions	Multiple Additions and Deletions
Chapter 3 - General Zoning	6 - Solar Panels, 9 - Remove Microcells,
Chapter 6 - Residential Districts	Lot AreaCoverage Images inserted, 7- Area, Bulk, Density, façade materials, 8- Short-Term Rental Prohibition
Chapter 7 - Business Districts	2 - Establishment of Commercial Districts, ATM, 4 - Location or Retail Sales on Premises, 5 - Outdoor Sales and Uses, Outdoor Storage, Mobile Food Vendors, 7A,7B, 7C- Reatil Establishment, Retail;Display Showroom, Outdoor ATM 7D- Hotel Apartment, Hotel, Condominium, Outdoor ATM
Chapter 10 - ORA and Office Districts	ORA Districts -Data Center, Special Uses - Outdoor ATM , ORA-3 - Deleted Development Plan replaced with Planned Development, O-3- Retail sales and signage, Outdoor ATM, O-4- Planned Development for mixed use above 10 acres, Outdoor ATM
Chapter 12 - Offstreet Parking and Loading	4.H.3- Parking Structures-Setbacks, 5 - Accessible Parking
Chapter 14 - Administrative and Enforcement	Commissions Combined, 7 - Amendments Updated
Chapter 15 - Planned Developments	Commissions Combined, 8 - Amendments Updated, addition of minor change for PD text.
Chapter 18 - Landscaping	Entire New Chapter

VILLAGE OF OAK BROOK Illinois

MINUTES OF THE MARCH 6, 2024
REGULAR MEETING OF THE
PLANNING & ZONING COMMISSION OF THE
VILLAGE OF OAK BROOK
APPROVED AS WRITTEN ON APRIL 3, 2024

1. CALL TO ORDER: CALL TO ORDER

The Meeting of the Planning & Zoning Commission was called to order by Chairman Raju Iyer at 6:30 p.m.

2. ROLL CALL: ROLL CALL

Rama Raman called the roll with the following persons:
PRESENT: Chairman Raju Iyer, Vice Chairman Wayne Ziemer, Members Jeff Bulin, Natalie Cappetta, Richard DiBernardo, Baker Nimry, James Pontrelli and Kenneth Wilczak
IN ATTENDANCE: Trustee Edward Tiesenga, Village Attorney Michale Castaldo III, Director Rebecca Von Drasek and Village Planner Rama Raman

3. APPROVAL OF MINUTES MINUTES

REGULAR PLANNING & ZONING COMMISSION MEETING OF FEBRUARY 7, 2024 FEBRUARY 7, 2024

Motion by Member Bulin, seconded by Member Cappetta to approve the minutes of the February 7, 2024 Regular Planning & Zoning Commission meeting as modified. VOICE VOTE: Motion Carried.

4. UNFINISHED BUSINESS UNFINISHED BUSINESS

There was no unfinished business.

5. NEW BUSINESS NEW BUSINESS

A. ZONING AMENDMENT - INTRODUCTION ZONING AMENDMENT - INTRO

Chairman Iyer announced the commencement of the meeting and asked Director Von Drasek to provide an overview.

She indicated that staff was tasked to amend several sections in Village Code and wanted to provide the materials to the P&Z Commission well in advance to an official business during a Public Hearing. She said it was an introduction only and no official

discussion or vote would be taking place tonight. She reviewed the each amended section.

Members commented on several sections and provided suggestions. They also questioned holding a workshop prior to the public hearing for the zoning amendments.

Director Von Drasek stated it would be a violation to Open Meeting Act if they held workshops and offered weekly public hearings.

6. OTHER BUSINESS — OTHER BUSINESS

7. PUBLIC COMMENT — PUBLIC COMMENT

There were no public comments.

8. ADJOURNMENT: — ADJOURNMENT

Motion by Member Ziemer, seconded by Member Bulin to adjourn the meeting at 7:49PM. VOICE VOTE: Motion carried.

ATTEST:

/s/ Rebecca Von Drasek
Rebecca Von Drasek
Director of Development Services

R.G.V.

VILLAGE OF OAK BROOK Illinois

MINUTES OF THE MAY 22, 2024
SPECIAL MEETING OF THE
PLANNING & ZONING COMMISSION OF THE
VILLAGE OF OAK BROOK
APPROVED AS WRITTEN ON JUNE 5, 2024

1. CALL TO ORDER: CALL TO ORDER

The Special Meeting of the Planning & Zoning Commission was called to order by Chairman Raju Iyer at 6:30 p.m.

2. ROLL CALL: ROLL CALL

Rama Raman called the roll with the following persons:
PRESENT: Chairman Raju Iyer, Members Jeff Bulin, Natalie Cappetta, Richard DiBernardo, Baker Nimry, James Pontrelli and Kenneth Wilczak (arrived at 6:31)
IN ATTENDANCE: Village Attorney Sam Tornatore , Director Rebecca Von Drasek and Village Planner Rama Raman

3. APPROVAL OF MINUTES MINUTES

REGULAR PLANNING & ZONING COMMISSION MEETING OF MAY 1, 2024 MAY 1, 2024

Motion by Member Nimry, seconded by Member Bulin to approve the minutes of the May 1, 2024 Regular Planning & Zoning Commission meeting as amended. VOICE VOTE: Motion Carried.

4. UNFINISHED BUSINESS UNFINISHED BUSINESS

There was no unfinished business.

5. NEW BUSINESS NEW BUSINESS

A. TEXT AMENDMENT UNIVERSAL ZONING CODE AMENDMENTS TA UNIVERISAL ZONING CODE AMENDMENTS

Chairman Iyer announced the commencement of the public hearing for the proposed petition and Director Von Drasek gave a brief overview of the proposed petition.

Director Von Drasek explained the process for reviewing the zoning code amendments (Oak Brook Code Chapter 13) and asked the commission to concentrate on the first two chapters.

Members had concerns about the application materials and meeting notifications and suggested revisions.

Chairman Iyer asked Member Bulin to discuss the copy of the email correspondence distributed to each member regarding the exterior façade masonry requirement. Member Bulin believed the requirement should be removed immediately but would defer the discussion until Chapter 6 was reviewed.

Members discussed chapter one and chapter two (Definitions) of the Zoning Regulations and suggested several changes to the definitions.

Motion by Member Wilczak and seconded by Member Bulin to continue the discussion to the next regular meeting.

ROLL CALL:

Ayes:	7	–	Chairman Iyer, Members Bulin, Cappetta, DiBernardo, Nimry, Pontrelli and Wilczak. Motion carried.
Absent:	0	-	Vice Chairman Ziemer and Member Hasan

6. OTHER BUSINESS — OTHER BUSINESS

Director Von Drasek discussed special meeting options for the Fourth of July holiday.

7. PUBLIC COMMENT — PUBLIC COMMENT

No additional comments.

8. ADJOURNMENT: — ADJOURNMENT

Motion by Member Cappetta, seconded by Member Nimry to adjourn the meeting at 9:22PM. VOICE VOTE: Motion carried.

ATTEST:

/s/ Rebecca Von Drasek
Rebecca Von Drasek
Director of Development Services

Member Bulin asked if Chapter 13-11-13 superseded the existing sign code. He recommended a setback of 10-feet instead of a 5-feet setback. Also, that the B-2 and B-3 districts follow the display size maximum of 20 square-foot instead of 50 square-feet.

Director Von Drasek replied yes that 13-11-13 would supersede the existing code and that Member Bulin's suggestions were noted.

Members felt there were too many design factors to consider, traffic dangers, sizes and illumination.

Motioned by Member Cappetta and seconded by Member DiBernardo to deny the request.

ROLL CALL:

Ayes:	6	–	Vice Chairman Ziemer, Members Bulin, Cappetta, Pontrelli and Wilczak. Motion carried.
Abstain:	1	-	Member Nimry
Absent:	2	-	Chairman Iyer and Member Hasan

4.

B. TEXT AMENDMENT UNIVERSAL ZONING CODE AMENDMENTS

TA UNIVERISAL ZONING CODE AMENDMENTS

Members continued the universal zoning code amendments discussion and started Chapter 3.

Bob Lundgren, 1020 Birchwood was present to discuss Chapter 6 (Residential Districts) and was in favor of the lot coverage amendments. However, he felt a 40-foot height limit was too high. He also wanted to limit hardscape coverage in the R-2 district.

Members made suggested changes to chapters 3, 5, 7 and 8. They will review chapter 6 at the next meeting to provide an opportunity for Mr. Lundgren to speak again.

Motion by Member Wilczak and seconded by Member Bulin to continue the discussion to the next meeting on June 26, 2024.

ROLL CALL:

Ayes:	6	–	Vice Chairman Ziemer, Members Bulin, Cappetta, DiBernardo, Pontrelli and Wilczak. Motion carried.
Absent:	3	-	Chairman Iyer, Members Hasan and Nimry

5. NEW BUSINESS

NEW BUSINESS

There was no new business.

6. OTHER BUSINESS

OTHER BUSINESS

Director Von Drasek discussed special meeting times for Zoning Amendments and the Fourth of July holiday - Wednesday, June 26 and July 17th were suggested.

7. PUBLIC COMMENT

PUBLIC COMMENT

No additional comments.

8. ADJOURNMENT:

ADJOURNMENT

Motion by Member DiBernardo, seconded by Member Bulin to adjourn the meeting at 8:54 PM. VOICE VOTE: Motion carried.

ATTEST:

/s/ Rebecca Von Drasek
Rebecca Von Drasek
Director of Development Services

MINUTES OF THE JUNE 26, 2024
SPECIAL MEETING OF THE
PLANNING & ZONING COMMISSION OF THE
VILLAGE OF OAK BROOK
APPROVED AS WRITTEN ON JULY 17, 2024

1. CALL TO ORDER: CALL TO ORDER

The Meeting of the Planning & Zoning Commission was called to order by Vice Chairman Wayne Ziemer at 6:30 p.m.

2. ROLL CALL: ROLL CALL

Rama Raman called the roll with the following persons:
PRESENT: Vice Chairman Wayne Ziemer, Members Jeff Bulin, Natalie Cappetta, Richard DiBernardo, James Pontrelli and Kenneth Wilczak (arrived 6:33pm)
IN ATTENDANCE: Village Attorney Michael Castaldo III, Director Rebecca Von Drasek and Village Planner Rama Raman

3. APPROVAL OF MINUTES MINUTES

REGULAR PLANNING & ZONING COMMISSION MEETING OF JUNE 5, 2024 JUNE 5, 2024

Motion by Member Bulin, seconded by Member Cappetta to approve the minutes of the June 5, 2024 Regular Planning & Zoning Commission meeting as amended. VOICE VOTE: Motion Carried.

4. UNFINISHED BUSINESS UNFINISHED BUSINESS

A. TEXT AMENDMENT UNIVERSAL ZONING CODE AMENDMENTS TA UNIVERISAL ZONING CODE AMENDMENTS

Vice Chairman Ziemer announced the commencement of the public hearing for the proposed petitions.

Director Von Drasek announced the continuation of the zoning code discussion and explained updates in chapter 6. It was noted that a representative from Brookfield Properties was in attendance and that they would attend and speak at the July 17th meeting.

Member Bulin read a paragraph from an email he sent regarding the suggested requirement of minimum 50% masonry on all exterior elevations in the residential

districts. He was opposed to the suggestion and recommended deleting the entire section. Members agreed to delete the entire section.

Members made several suggested changes to chapters 6, 10, 12 and 13. Notably concerns regarding adding parking regulations for outdoor dining.

Motion by Member Bulin and seconded by Member DiBernardo to continue the discussion to the next meeting on July 17, 2024.

ROLL CALL:

Ayes:	6	–	Vice Chairman Ziemer, Members Bulin, Cappetta, Pontrelli and Wilczak. Motion carried.
Absent:	3	-	Chairman Iyer and Members Nimry and Hasan

5. NEW BUSINESS

NEW BUSINESS

There was no new business.

6. OTHER BUSINESS

OTHER BUSINESS

No other business mentioned.

7. PUBLIC COMMENT

PUBLIC COMMENT

No additional comments.

8. ADJOURNMENT:

ADJOURNMENT

Motion by Member Bulin, seconded by Member DiBernardo to adjourn the meeting at 8:34 PM. VOICE VOTE: Motion carried.

ATTEST:

/s/ Rebecca Von Drasek
Rebecca Von Drasek
Director of Development Services

Director and Village Manager in accordance with Section 13-15-8 of the Zoning Ordinance.

ROLL CALL:

Ayes:	7	–	Chairman Iyer, Vice Chairman Ziemer, Members Bulin, Cappetta, DiBernardo, Hasan and Nimry. Motion carried.
Nays:	1		Member Wilczak
Absent:	1	-	Member Pontrelli

Chairman Iyer noted the public hearing for this matter was concluded.

4. UNFINISHED BUSINESS

NEW BUSINESS

A. TEXT AMENDMENT UNIVERSAL ZONING CODE AMENDMENTS

UNIVERSAL ZONING CODE AMENDMENTS

Director Von Drasek announced the continuation of the zoning code discussion and noted the focus on lot-coverage and landscaping.

Members discussed Chapter 15 regarding the restrictions to minor amendments and the proposed revisions provided by Brookfield Properties.

Danielle Cassel, Vedder Price, 222 North LaSalle Street, Chicago, attorney for Brookfield Properties reviewed her proposed text and was concerned with significant burdens for property owners going through a planned development process.

Director Von Drasek expressed the importance of defining lot-coverage versus bulk, exempted structures, special allowances, etc.

Members discussed allowing 20% lot-coverage for the principal structure and 37.5% for the entire lot.

Member Bulin suggested adding bicycle parking to the text amendment.

Director Von Drasek and Members discussed chapters 15 and 18, reviewing the restrictions to minor amendments, lot-coverages and landscaping.

Motion by Member Hasan and seconded by Vice Chairman Ziemer to continue the discussion to the next Special meeting on August 21, 2024.

ROLL CALL:

Ayes:	8	–	Chairman Iyer, Vice Chairman Ziemer, Members Bulin, Cappetta, DiBernardo, Hasan, Nimry and Wilczak. Motion carried.
Absent:	1	-	Member Pontrelli

6. OTHER BUSINESS

OTHER BUSINESS

No other business mentioned.

7. PUBLIC COMMENT

PUBLIC COMMENT

No additional comments.

8. ADJOURNMENT:

ADJOURNMENT

Motion by Member Hasan, seconded by Member Cappetta to adjourn the meeting at 8:55 PM. VOICE VOTE: Motion carried.

ATTEST:

/s/ Rebecca Von Drasek
Rebecca Von Drasek
Director of Development Services

VILLAGE OF OAK BROOK Illinois

MINUTES OF THE AUGUST 21, 2024
SPECIAL MEETING OF THE
PLANNING & ZONING COMMISSION OF THE
VILLAGE OF OAK BROOK
APPROVED AS WRITTEN ON SEPTEMBER 4, 2024

1. CALL TO ORDER: CALL TO ORDER

The Meeting of the Planning & Zoning Commission was called to order by Chairman Raju Iyer at 6:30 p.m.

2. ROLL CALL: ROLL CALL

Rama Raman called the roll with the following persons:
PRESENT: Chairman Raju Iyer, Vice Chairman Wayne Ziemer, Members Jeff Bulin, Natalie Cappetta, Richard DiBernardo, Rahma Hasan, Baker Nimry and Kenneth Wilczak (arrived 6:32)
IN ATTENDANCE: Village Attorney Michael Castaldo III, Director Rebecca Von Drasek and Village Planner Rama Raman

3. APPROVAL OF MINUTES MINUTES

REGULAR PLANNING & ZONING COMMISSION MEETING OF AUGUST 7, 2024 AUGUST 7, 2024

Motion by Member Hasan, seconded by Member Nimry to approve the minutes of the August 7, 2024, Regular Planning & Zoning Commission meeting as written. VOICE VOTE: Motion Carried.

4. UNFINISHED BUSINESS UNFINISHED BUSINESS

A. TEXT AMENDMENT UNIVERSAL ZONING CODE AMENDMENTS UNIVERSAL ZONING CODE AMENDMENTS

Chairman Iyer announced the commencement of the public hearing and all witnesses testifying were sworn in.

Director Von Drasek announced the continuation of the zoning code discussion and handed out correspondence that was received regarding the amendments.

Members were polled on several sections that were updated according to their comments at past meetings. They included:

RGV.

- Automobile Charging Facility Definition
- Open Space Definition
- Parking Structure Definition
- Showroom Definition
- Lot Coverage & Floor Area Residential Districts
- Short-Term Residential Rental
- Historical Preservation Special Use for Commercial Districts
- Shared Parking Reduction for Mixed Use Developments
- Bicycle Parking Standards
- Hotel/Condo – Hotel/Apartments Definition and Use
- Mobile Food Vending Definition

Members discussed the Planned Development section at length.

Danielle Cassel, Vedder Price, 222 North LaSalle Street, Chicago, attorney for Brookfield Properties reviewed the proposed text that she handed out. She was not content with the listed items that would be considered major changes. She said that other municipalities considered major changes when it related to bulk, use and density, not aesthetic changes. She was concerned with significant burdens for property owners going through another planned development process for a major change.

Ms. Cassel also commented on the Showroom definition. She believed it was too vague and would create confusion with prospective tenants possibly having to go through a Special Use in order to open at Oakbrook Center. She noted a proposed definition in her handout and mentioned state legislation regarding municipalities limited right to classify Special Uses.

Members asked Brookfield Properties to recommend what they believed would be a fair percentage of showrooms in the B-2 District.

Members discussed special event language and permitting.

After discussion, staff agreed to create a new draft for the next meeting.

Motion by Member Hasan and seconded by Member Bulin to continue the discussion to the next Regular meeting on September 4, 2024.

ROLL CALL:

Ayes:	7	–	Chairman Iyer, Members Bulin, Cappetta, DiBernardo, Hasan, Nimry and Wilczak. Motion carried.
Absent:	2	-	Vice Chairman Ziemer and Member Pontrelli

5. NEW BUSINESS

NEW BUSINESS

R.G.V.

There was no New Business

6. OTHER BUSINESS

OTHER BUSINESS

No other business mentioned.

7. PUBLIC COMMENT

PUBLIC COMMENT

No additional comments.

8. ADJOURNMENT:

ADJOURNMENT

Motion by Member Hasan, seconded by Member Bulin to adjourn the meeting at 8:53 PM. VOICE VOTE: Motion carried.

ATTEST:

/s/ Rebecca Von Drasek
Rebecca Von Drasek
Director of Development Services

Tom Moore, 1 Yorkshire was in support of the consolidation and asked if the existing trees would remain.

Mr. Green didn't anticipate removing any trees and explained that the house was designed for the center of the lot.

Motioned by Member Hasan, seconded by Member Bulin to recommend approval of the plat of consolidation subject to the following conditions:

1. Final engineering review and approval.
2. Recording of the document by Village Staff.

ROLL CALL:

Ayes:	8	–	Chairman Iyer, Members Bulin, Cappetta, DiBernardo, Hasan, Nimry, Pontrelli and Wilczak. Motion carried.
Absent:	1	-	Vice Chairman Ziemer

4. UNFINISHED BUSINESS

UNFINISHED BUSINESS

A. TEXT AMENDMENT UNIVERSAL ZONING CODE AMENDMENTS

UNIVERSAL ZONING CODE AMENDMENTS

Director Von Drasek announced the continuation of the zoning code discussion and noted additional handouts from a neighbor and the village attorney. They started the review of the new Chapter 18 – Landscape Standards.

Director Von Drasek polled the commission on whether there should be a landscape requirement for new residential construction.

Members were against adding that requirement.

Bob Lindgren, 1020 Birchwood Road believed there should be stronger limits on lot coverage and particularly the height allowances. He suggested the building height not be greater than the front yard setback.

Member Bulin believed the height limits listed in the code were appropriate.

Attorney Castaldo III distributed definitions for the B3 Business Districts regarding Permitted and Special Uses specifically related to Retail Establishment, Retail Showroom and Display Showroom.

Members discussed and asked Brookfield Properties for their opinion.

Danielle Cassel, Vedder Price, 222 North LaSalle Street, Chicago, attorney for Brookfield Properties said there was a lot to analyze and thought the definitions were too vague.

Attorney Castaldo III mentioned the definitions were provided to distinguish where the selling activities occur.

Ms. Cassel suggested going back to the definition she proposed in July.

Serge Khalinski, Brookfield Properties, 100 Oakbrook Center, Oak Brook described what he believed was a showroom – a marketing facility where no sales were in involved. He was in full support that all applicable generated sales taxes remain in Oak Brook. He also wanted more definitive language in order to secure retail tenants at a quicker pace.

Members debated the tax impact on display showrooms.

Mr. Khalinski discussed the desire for showrooms to develop relations with customers to build their brand. He did not believe it was possible for a mall to become showrooms only and said it was hard to determine the tax impact.

Village Attorney suggested concentrating on the two definitions – Retail Establishment (permitted use) and Display Showroom (special use).

Members discussed the definitions and tax burdens in length. Members were polled and agreed with the Village Attorney suggestions with some definition modifications.

Members discussed Hotel/Apartment, Hotel/Condo definitions, tax burdens and what should be a permitted or a special use.

Ms. Cassel brought up a past handout detailing Oakbrook Center's outdoor activity. She encouraged members to consider the uniqueness of the mall's interior area being surrounded by buildings and not visible to the public rights-of-way.

Members discussed the proposed language from Ms. Cassel.

Motion by Member Hasan and seconded by Member DiBernardo to recommend approval of the Universal Zoning Code Amendments as discussed, amended and polled.

ROLL CALL:

Ayes:	8	–	Chairman Iyer, Members Bulin, Cappetta, DiBernardo, Hasan, Nimry, Pontrelli and Wilczak. Motion carried.
Absent:	1	-	Vice Chairman Ziemer

6. OTHER BUSINESS

OTHER BUSINESS

Other upcoming business mentioned.

7. PUBLIC COMMENT

PUBLIC COMMENT

No additional comments.

8. ADJOURNMENT:

ADJOURNMENT

Motion by Member Hasan, seconded by Member Bulin to adjourn the meeting at 8:53 PM. VOICE VOTE: Motion carried.

ATTEST:

/s/ Rebecca Von Drasek
Rebecca Von Drasek
Director of Development Services

Jeffrey Bulin <mail@designguild.ws> 5/7/2024 3:26 PM

RE: FW: Oak Brook Tree Ordinance

To Edward N. Tiesenga <ed@tiesenga.net> • MPA Rebecca Von Drasek <rvondrasek@oak-brook.org>

Hi Ed -

Rebecca and I have met and worked a bit on the landscape ordinance and subsequent tree preservation ordinance. It will move forward as a good addition to the Zoning Ordinance.

However....

I understand there is a proposal to add architectural aesthetic language to the zoning ordinance. I believe this to be a horrible idea. No code should dictate aesthetics, it is an overstep of government authority to impose taste.

The argument to require a minimum of 50% masonry on all exterior elevations (specifically brick and stone) will not provide the intent to prevent undesirable design. There are roughly 47 residential architectural styles in the United States. Of those, only 20 styles have masonry construction or features (43%). Within that number, 8 styles utilize stucco and not brick or stone. In essence you have limited the usable architectural styles to 26% of those available within the library of American Residential Styles.

In our area, the community of Westchester, Illinois requires all residential construction to be masonry… Please, drive through the neighborhoods of Westchester to see the unappealing uniform look of housing that is all brick and stone. 57% of the residential styles in the United States have no masonry detailing or features. Not every house relies on the pure interpretation of a specific architectural style, but good design incorporates tasteful references. Requiring specific materials will not result in good design…

Area, volume, height, and setbacks are quantifiable entities that will promote good design. This approach is very similar to the minimum plant quantities we are establishing for the landscape ordinance. These are numbers we can add to the ordinance that will give guidance to designers.

Please reconsider advancing this proposal forward.

Respectfully - Jeff

EMAIL REGARDING
13-6-6 A.3.
50% MASONRY

VILLAGE OF OAK BROOK
Planning & Zoning Commission

STAFF REPORT

DATE: May 15, 2024

CASE NO: 2024-0-ZO-TA

DESCRIPTION: Text Amendment to Zoning Regulations

PETITIONER: Village of Oak Brook

ADDRESS/LOCATION: NA

EXISTING ZONING: NA

Discussion:

The Village of Oak Brook has initiated a petition for a text amendment to the Zoning Regulations. This comprehensive text amendment originated from a variety of concerns the Village elected officials have expressed regarding new developments within the Village.

In 2015, the Village worked with Teska Associates to draft a comprehensive Code update. Kon Savoy presented the draft amendments at multiple Plan Commission meetings in 2017. The revisions to the Zoning Ordinance were never presented to the Zoning Board of Appeals and not adopted.

At the February 27, 2024 meeting of the Village Board staff presented draft language which incorporated some of Teska Associates draft and language addressing current concerns. The revised text was provided to the Planning & Zoning Commission at the March 6, 2024 meeting to allow Commissioners adequate time to review the proposed revisions prior to the public hearings.

Since the March meeting staff incorporated minor revisions requested by the Village Board and P&Z Commissioners. At the Village Board meeting on May 14, 2024, the Board referred the text amendments (dated 5-8-24) to the P&Z Commission.

Following is a list of topics these amendments seek to address.

- Update title to "Director of Development Services".
- Break out showroom from retail and assign only to appropriate districts, special use in other places where previously allowed.
- Break out ATM from financial institutions and assign only to appropriate districts.
- Impervious surface % limits by zoning district.
- Lot coverage % limits by zoning district.
- Airbnb /short term rental restrictions.
- Food trucks (special events)-Mobile Food vendors.
- Solar/wind zoning controls.

- Planned Development Amendment (Admin, Minor, Major).
- Requirements for Planned Development applications for the ORA3.
- Flagpole height.
- Remove text microcells.
- Combine ZBA & Plan Commission (chapter 14).
- Clinic (add in definitions) -Medical Clinic.
- Firewood setback.
- Landscape Standards.
- EV chargers to go in multifamily structures.

The proposed language is attached, dated May 8, 2024, text that has been added is redlined and underlined and text that is being deleted has been ~~stricken out~~. Revisions to the materials since the March meeting of the P&Z Commission are highlighted in yellow.

RESPONSIBILITIES OF HEARING BODIES:
The Planning & Zoning Commission (P&Z) have the responsibility to make a recommendation on the request for a text amendment to the Zoning Ordinance. Please include in your consideration, your findings with respect to the standards specified in the Zoning Ordinance for amendments. The materials submitted and drafted by staff specifically address each of these zoning amendment standards.

CONCLUSION:
If the P&Z Commission concurs with these revisions and is of the opinion that the requirements for a text amendment have been met, I would request that a recommendation to approve these text amendment changes in the draft dated May 8, 2024 be made in accordance with the accompanying zoning amendment factors. If the P&Z Commission prefer to further modify the proposed language or deny please provide findings of fact detailing the Commission's concerns. Either recommendation will then be forwarded to the Village Board for further review, deliberation, and discussion.

As always, please contact staff if you have any questions prior to Wednesday's P&Z meeting.

Respectfully Submitted,

R. Von Drasek

Rebecca Von Drasek
Development Services Director

Rama Raman

Rama Raman
Village Planner

TITLE 13
ZONING REGULATIONS

CHAPTER 1
TITLE, PURPOSE AND INTENT

SECTION:

13-1-1: Title

13-1-2: Purpose And Intent

13-1-3: Interpretation Of Provisions

13-1-4: Separability

13-1-1: TITLE:

This Title shall be known, cited and referred to as the ZONING ORDINANCE OF THE VILLAGE OF OAK BROOK, ILLINOIS OF 1966. (Ord. G-60, 3-22-1966)

13-1-2: PURPOSE AND INTENT:

A. Purpose: This Title is adopted to the end that:

1. Adequate natural light, pure air and safety from fire and other dangers may be secured.

2. Value of land and structures throughout the Village may be conserved.

3. Congestion in the public streets may be lessened or avoided.

4. Hazards to persons and damage to property resulting from the accumulation or runoff of storm or flood waters may be lessened or avoided.

5. Aesthetic values throughout the Village may be preserved and enhanced.

6. Public health, safety, comfort, morals, convenience and general welfare may otherwise be promoted.

B. Intent: To achieve these ends, this Title sets forth regulations and standards to:

1. Regulate and limit the height and bulk of structures hereafter erected.

2. Establish, regulate and limit setback lines along streets.

3. Regulate and limit the intensity of the use of lot areas, and to regulate and determine the area of open spaces within the surrounding structures.

4. Classify, regulate and restrict the location of trades and industries and the location of structures designed for industrial, business, residential and other specified uses.

5. Divide the entire Village into districts of such number, shape, area and of such different classes as may be suitable.

6. Prohibit structures or uses incompatible with the character of such districts.

7. Fix standards to which structures therein shall conform.

8. Prevent additions to, and alteration or remodeling of, exiting structures in such a way as to avoid the restrictions and limitations lawfully imposed under this Title.

9. Provide for the gradual elimination of structures and uses which are incompatible with the character of the districts in which they are located.

10. Define and limit the powers and duties of the administrative officers and bodies as provided in this Title.

11. Prescribe penalties for the violation of the provisions of this Title, or of any amendment thereto. (Ord. G-60, 3-22-1966)

13-1-3: INTERPRETATION OF PROVISIONS:

In their interpretation and application, the provisions of this Title shall be held to be the minimum requirements for the promotion and protection of the public health, safety, comfort, morals, convenience and general welfare. In addition:

A. Where the conditions imposed by any provision of this Title upon the: 1) use of land or structures; 2) height and bulk of structures; 3) floor area requirements; 4) lot area and width requirements; and 5) yard and other open space requirements are more restrictive or less restrictive than comparable standards imposed by any other provision of this Title or of any other law, ordinance, resolution, rule or regulation of any kind, the regulations which are more restrictive, or which impose higher standards or requirements, shall govern.

B. This Title is not intended to abrogate any easement, covenant or other private agreement.

C. No use or structure not lawfully existing at the time of the adoption of this Title shall become or be made lawful solely by reason of the adoption of this Title; and to the extent that, and in any manner that, said unlawful structures or use are in conflict with the requirements of this Title, said structure or use remains unlawful under the provisions of this Title. (Ord. G-60, 3-22-1966)

13-1-4: SEPARABILITY:

It is hereby declared to be the intention of the Village President and Board of Trustees that the several provisions of this Title are separable, in accordance with the following:

A. If any court of competent jurisdiction shall adjudge any provisions of this Title to be invalid, such judgment shall not affect any other provision of this Title not specifically included in said judgment.

B. If any court of competent jurisdiction shall adjudge invalid the application of any provision of this Title to a particular property or structure, such judgment shall not affect the application of said provision to any other property or structure not specifically included in said judgment. (Ord. G-60, 3-22-1966)

DRAFT

CHAPTER 2
DEFINITIONS

SECTION:

13-2-1: Rules Of Word Construction

13-2-2: Definitions

13-2-1: RULES OF WORD CONSTRUCTION:

In the construction of this Title the rules and definitions contained in this Section shall be observed and applied, except when the context clearly indicates otherwise.

In addition:

A. The present tense includes the future and the future the present; the singular number includes the plural and the plural the singular; the word "shall" is mandatory, and the word "may" is permissive.

B. The material under each caption or heading in this Title shall be construed and limited in a manner consistent with the applicable captions or headings and subheadings. (Ord. G-60, 3-22-1966)

13-2-2: DEFINITIONS:

The following words and terms, when used in this Title, shall have the meaning set forth after each:

ABUTTING: To have a common property line or district line.

ACCESSORY: A use, structure, or part of a structure, which:

A. Is subordinate to and serves the principal use or structure.

B. Is subordinate in area, extent or purpose to the principal use or structure.

C. Contributes to the comfort, convenience or necessity of occupants of the principal use or structure.

D. Is located on the same lot as the principal use or structure served, with the exception of accessory off-street parking facilities as are permitted elsewhere than on the same lot with the use or structure.

ACCESSORY LIVING UNIT: A detached accessory building that provides living space (as defined by International Residential Code, Chapter 2, Definitions) in a location other than the principal residence. A detached accessory living unit may be located in a pool house, detached garage, or other similar accessory building or structure.

DRAFT

ADJACENT: Touching, as distinguished from lying near.

ADJOINING: Touching or contiguous, as distinguished from lying near.

AGRICULTURE: Farming, dairying, pasturage, agriculture, horticulture, floriculture, viticulture and animal and poultry husbandry and accessory uses customarily incidental to normal agricultural activities.

~~AIRPORT: A lot which is used, or intended, for the landing and takeoff of aircraft, together with all structures located thereon.~~

ALLEY: A public or private right of way, other than a street, less than thirty feet (30') in width, which right of way normally affords secondary means of access to abutting properties.

APARTMENT: A room or suite of rooms in a multiple-family structure, which is arranged, designed, used or intended to be used as a single housekeeping unit. A private bathroom and basic kitchen facilities, i.e., sink, stove, and refrigerator permanently installed must always be included for each apartment.

ARBOR**:** A landscape structure or shelter support by at least 4 columns or poles, consisting of latticework to support climbing shrubs or vines. For the purposes of this Title, an arbor is not a fence and is an accessory structure.

Arbor

ASSISTED LIVING FACILITY: A facility providing housing and services for a group of persons, typically elderly, which may include provision of meals, housekeeping, and personal care assistance.

ALTERATION: A change in size, shape, character or use of a structure.

~~AUTOMOBILE LAUNDRY: A building or portion thereof containing facilities for washing more than two (2) motor vehicles, using production line method.~~

AUTOMOBILE CHARGING FACILITY, RESIDENTIAL: An electrical charging device for licensed electric or hybrid motor vehicles, provided that the charging device and vehicle being charged are completely enclosed within a single-family residence or accessory structure.

AUTOMOBILE CHARGING FACILITY, COMMERCIAL: An electrical charging device or group of devices for licensed electric or hybrid motor vehicles, other than those defined as "AUTOMOBILE CHARGING FACILITY, RESIDENTIAL".

AUTOMOBILE MINI-MARKET: An automobile service station which includes the retail sale of merchandise or services not related to the maintenance, service or repair of motor vehicles in addition to the sale of fuel, oil and accessories for motor vehicles. Such use shall be located entirely within the buildable area and the building floor area, including all storage for such use, which may not exceed ~~one~~ two thousand (~~1~~2,000) square feet.

AUTOMOBILE SERVICE ~~STATION~~ FACILITY: A building or portion thereof or lot used for offering for sale at retail to the public, fuels, oils and accessories for motor vehicles; where repair service is incidental, where no storage or parking space is offered for rent and where no motor vehicles or boats are offered for sale or rent. When such dispensing, sale or offering for sale is incidental to the conduct of a public garage, the premises are classified as a public garage.

AWNING: A roof like projection, rigid or retractable in operation, which projects from the wall of a building.

BASEMENT. A *story* that is not a *story above grade plane*

(see "*Story above grade plane*")~~BASEMENT: A story having part but not more than one-half (1/2) of its floor to clear ceiling height below grade. When a basement is used for storage, or garages for use of occupants of the building, or other facilities common for the operation and maintenance of the entire building, it shall not be counted as a story.~~

BI-LEVEL: A dwelling having one story at approximate grade level and a second story one-half (1/2) story higher over a habitable basement approximately one-half (1/2) of which basement is above grade level.

BLOCK: A tract of land bounded by streets, or by a combination of street, railroad rights of way, public parks, permanent open space and other lines of demarcation. A block may be located in part beyond the corporate limits of the village.

BOARD OF TRUSTEES: The president and board of trustees of the village of Oak Brook, Illinois.

BUILDABLE AREA: That portion of a lot which meets at least the minimum width requirements and setback lines of the district within which it is located (see definition of Lot Width, and illustrations in Chapters 6 and 7).

BUILDING: A structure having a roof designed or built for the enclosure, shelter or protection of persons, animals, chattels or movable property of any kind and which is permanently affixed to the land.

BUILDING, ACCESSORY: A subordinate building or portion of a principal building, the use of which is incidental to that of the principal building and customary in connection with that use.

BUILDING, COMPLETELY ENCLOSED: A building with a permanent roof separated on all sides from the adjoining open space or from other structures, by exterior walls or party walls, pierced only by windows and normal entrance and exit doors.

BUILDING COVERAGE: The horizontal area measured from the outside of the exterior walls of the ground floor of all principle and accessory buildings on a lot.

BUILDING, DETACHED: A building surrounded by open space on the same lot.

BUILDING, PRINCIPAL: A ~~nonaccessory~~ building in which the primary use of the lot on which it is located is conducted.

~~BUILDING, TEMPORARY: A building not designed or intended to be permanently located at the place where it is, or where it is intended to be, placed or affixed.~~

BULK: The term used to indicate the size, location and number of structures, including: a) size and height of structures; b) location of exterior walls; c) floor area ratio; d) open space allocated to structures; and e) lot area and lot width.

BURIAL STRUCTURES: Aboveground structures within cemeteries, other than community burial structures, used, or intended to be used, for the entombment of human remains, including, without limitation, mausoleums, columbaria, and other similar structures.

BUSINESS: An occupation, employment or enterprise which occupies time, attention, labor and materials; or wherein merchandise is exhibited or sold or services are offered.

~~CANDLEPOWER: The luminous intensity, as evaluated in effectiveness of stimulating visual sensation, of any radiation in a given direction. The international candle was adopted in 1940 as one-sixtieth (1/60) of the brightness of freezing platinum.~~

CAR WASH: A building or portion thereof containing facilities for washing more than two (2) motor vehicles, using production line method.

CARPORT: A roofed automobile shelter, with two (2) or more open sides.

~~CELLAR: A story having more than one-half (1/2) of its floor to clear ceiling height below grade. A cellar is not included in computing the number of stories for the purpose of height measurement.~~

CEMETERY: Any land or structure dedicated to and used, or intended to be used, for the burial, interment, or entombment of human remains, and related accessory uses.

CEMETERY ACCESSORY STRUCTURES: Structures used in support of and accessory to a cemetery use, including, without limitation, caretaker or similarly used residences, greenhouses, sales offices, storage buildings, administrative offices, and other similar structures accessory to a cemetery.

~~CLINIC, MEDICAL OR DENTAL: A building or portion thereof, the principal use of which is for offices of physicians or dentists, or both, for the examination and treatment of persons on an outpatient basis.~~

~~CLOSED CUP FLASHPOINT: The lowest temperature at which a combustible liquid under the most favorable condition will give off a flammable vapor which will burn immediately.~~

CLUB OR LODGE, PRIVATE: A structure or part thereof used by a not for profit association of persons who are bona fide members and where facilities are restricted to members and their guests. Food and alcoholic beverages may be served on its premises provided they are secondary and incidental to the principal use.

COCKTAIL LOUNGE: An establishment where refreshments having alcoholic contents, as stipulated by law, are sold to be consumed on the premises, but not including restaurants where the principal business is the serving of food, except restaurants where accessory cocktail lounges are permitted by district regulations of this title.

COMMERCIAL THOROUGHFARE: A "roadway", as defined in this section, depicted or described as a principal arterial street or a collector route in the official comprehensive plan and official map of the village, and those local roadways that have substantial footage abutting and adjoining properties zoned ORA or business.

COMMUNITY BURIAL STRUCTURES: Aboveground structures over twenty feet (20') in height used, or intended to be used, for the entombment of human remains, located in or near the center of a cemetery in accordance with their specific applicable regulations in this title, including, without limitation, mausoleums, columbaria, and other similar structures.

CONDOMINIUM: A multiple dwelling or development containing individually owned dwelling units and jointly owned and shared common areas and facilities. These dwelling units may be attached horizontally or vertically.

CONFORMING STRUCTURE: Any structure which: a) complies with all the regulations of this title governing the district in which said structure is located; or b) is designed or intended for a permitted use or special use, as allowed in this title in the district in which it is located.

CORNER: The meeting place of two (2) converging surfaces.

COURT: An open unoccupied space, other than a yard, on the same lot with a building or group of buildings, and which is bounded on two (2) or more sides by such building or buildings.

Data Center: A facility used primarily for the storage, management, processing, and transmission of digital data, which houses computer and/or network equipment, systems, servers, appliances and other associated components related to digital data operations. Such facility may also include air handlers, power generators, water cooling and storage facilities, utility substations, and other associated utility infrastructure to support sustained operations at a data center.

DAYCARE CENTER: A facility in which are received three (3) or more children, not of common parentage, apart from their parents or guardians, for part or all of the day, but not later than nine o'clock (9:00) P.M. The term "daycare center" includes, but is not limited to, nursery schools, childcare centers, day nurseries and playgroups, but does not include kindergartens or nursery schools operated by public or private elementary or secondary school systems.

~~DEVELOPMENT PLAN: A proposal for the development of a parcel of land zoned or to be zoned ORA3 containing a statement setting forth the information specified in subsection 13-10C-6C1 of this title, and a plat setting forth graphically the information specified in subsection 13-10C-6C2 of this title.~~

DIRECTOR OF ~~COMMUNITY~~ DEVELOPMENT SERVICES: The official of the village, duly appointed and designated as its director of ~~community~~ development services.

DISABILITY: Any person who has a physical or mental impairment that substantially limits one or more major life activities; has a record of such impairment; or is regarded as having such an impairment.

DOCTOR'S OFFICE: A doctor's office is a medical facility which is not a medical clinic, and consists of up to four treatment rooms, either general practitioners or specialists, which receive and treat patients. Patients at a doctor's office are typically visiting for regular check-ups and do not require any intense form of hospitalization. A doctor's office shall not exceed one (1) doctor.

DOG RUNS/KENNELS: Enclosures constructed for the purpose of containing dog(s) outside of the principal structure on a property.

DRIVE-IN ESTABLISHMENT: A structure or part thereof in which are provided facilities primarily for serving patrons parked in automobiles on the premises.

DUPLEX: A structure containing two (2) dwelling units, each of which has separate and direct access to the outside.

DWELLING: A building or portion thereof designed or used exclusively for residential uses, including single-family and multiple-family dwellings, but not including mobile homes or other trailers, or lodging rooms in hotels, motels or lodging houses.

DWELLING, ATTACHED (TOWNHOUSE, GROUP, ROW OR GARDEN APARTMENT): A multiple-family dwelling originally designed and constructed to accommodate three (3) or more dwelling units, with the dwelling units joined together by party wall or walls. Each unit shall have its own ground floor entrance and living space.

DWELLING, DETACHED: A dwelling which is surrounded on all sides by open spaces on the same lot.

DWELLING, MULTI-FAMILY, AGE-RESTRICTED: An age-restricted or age-targeted development containing two (2) or more dwelling units and which may include independent living, assisted living, or senior congregate living.

DWELLING, MULTIPLE-FAMILY: A dwelling containing two (2) or more dwelling units.

DWELLING, SEMIDETACHED (TOWNHOUSE, GROUP, ROW OR GARDEN APARTMENT): A dwelling joined to one other dwelling by a party wall, or vertical cavity wall, and aboveground physically unifying horizontal structural elements.

DWELLING, SINGLE-FAMILY: A dwelling containing one dwelling unit only.

DWELLING UNIT: One or more rooms which are arranged, designed or used as living quarters for one family only. Individual bathrooms and complete single kitchen facilities, permanently installed to serve the entire family, shall always be included within each dwelling unit.

DRAFT

EFFICIENCY UNIT: A dwelling unit consisting of one principal room, exclusive of bathroom, kitchen, hallway, closets and may contain dining alcove directly off the principal room provided that such dining alcove does not exceed one hundred twenty five (125) square feet in area.

ELECTRIC DISTRIBUTION CENTER: A terminal at which electric energy is received from the transmission system and is delivered to the distribution system only.

ELECTRIC SUBSTATION: A terminal at which electric energy is received from the transmission system and is delivered to other elements of the transmission system and, generally to the local distribution system.

ENCLOSED PARKING: Parking which is housed in a parking structure, or in a portion of the principal building on a lot, which is completely under a permanent roof and with sidewalk enclosures so designed as to screen the parked cars from view from the exterior of the structure. Completely open wall sections shall be permitted only for entrance and exit driveways. Access to all parking spaces shall be from aisles within the structure.

ERECT: To construct or reconstruct or excavate, fill, drain or conduct physical operation of any kind in preparation for or in pursuance of construction or reconstruction or to move a structure upon a lot.

ESTABLISHMENT, BUSINESS: A structure or lot used in whole or in part as a place of business, the ownership or management of which is separate and distinct from the ownership or management of any other place of business located on the same or other lot.

EXISTING CEMETERIES AND STRUCTURES: Any cemetery, and the cemetery structures existing therein, existing as of January 22, 2013.

FALLOUT SHELTER: An accessory structure and use which incorporates the fundamentals for fallout protection - shielding mass, ventilation, and space to live, and which is constructed of such materials, in such a manner, as to afford to the occupants substantial protection from radioactive fallout. It shall not be used for storage purposes, other than for food, clothing, medical supplies and materials required for temporary shelter.

FAMILY: One person or two (2) or more persons each related to the other by blood, marriage or legal adoption, or a group of not more than three (3) persons not all so related, together with ~~his or~~ their domestic servants, maintaining a common household in a dwelling unit. ~~A family may include, in addition thereto, not more than two (2) roomers, boarders or permanent guests - whether or not gratuitous.~~

FENCE: A structure used to delineate a boundary, or as a barrier, or as a means of confinement or for confinement.

FENCE, OPEN: A fence, including gates, which has, over its entirety, fifty percent (50%) of the surface area in open space as viewed from an angle of ninety degrees (90°) from the fence line, except that the required open space in louver-type fences may be viewed from any angle~~, and excluding metal fences with more than seventy five percent (75%) of its surface area open space~~.

FENCE, SOLID: A fence, including gates, which conceals from view from adjoining properties, streets or alleys, activities conducted behind it.

FENCE TYPE STRUCTURE: Any fence, or part thereof, located in the buildable area of a property and not located in any required yard. "Fence type structures" include solid privacy screens and open patio enclosures. A "fence type structure" shall not include any part of a fence located outside of the buildable area of a property.

FLOOR AREA FOR DETERMINING FLOOR AREA RATIO: The sum of the gross horizontal area of the several stories including the basement of a building, measured from the exterior faces of the exterior walls, or from the center lines of walls separating two (2) buildings. The floor area shall also include the horizontal areas on each story devoted to: a) elevator shafts and stairwells; b) mechanical equipment, except that located on roofs whether open or enclosed, i.e., bulkheads, water tanks, and cooling towers; c) habitable attic space as permitted by the building code of the Village; d) interior balconies and mezzanines; e) enclosed porches; and f) accessory uses. The horizontal area in every story of a building devoted to enclosed off-street parking and off-street loading facilities shall not be included in the floor area.

FLOOR AREA FOR DETERMINING OFF-STREET PARKING AND LOADING REQUIREMENTS: Floor area when prescribed as the basis of determining off-street parking and off-street loading requirements shall be the sum of the gross horizontal area of the several stories of a structure taken from glass line to glass line and including the structure's primary and permanent working area, but excluding the basement.

FLOOR AREA RATIO: The numerical value obtained by dividing the floor area within a building or buildings on a lot by the area of such lot. (The floor area ratio as designated for each district, when multiplied by the lot area in square feet, shall determine the maximum permissible floor area for the building or buildings on the lot).

FOOT-CANDLE: A unit of illumination, equivalent to the illumination at all points which are one foot (1') distance from a uniform point source of one candlepower.

FOOT-LAMBERT: A unit of brightness, usually of a reflecting surface. A diffusion surface of uniform brightness reflecting or emitting the equivalent of the light from one candle at one foot (1') distant over one square foot has a brightness of one foot-lambert.

~~FREE-BURNING: The rate of combustion of a material which burns actively and easily supports combustion.~~

FREQUENCY: Signifies the number of oscillations per second in a sound wave and is an index of the pitch of the resulting sound.

~~GARAGE, PUBLIC: A building or portion thereof, other than a storage garage, designed or used for equipping, servicing, repairing motor vehicles. Hiring, selling and storing of motor vehicles may be included.~~

GARAGE, STORAGE: A building or portion thereof designed or used exclusively for storage of motor vehicles and in which fuels and oils are not sold, except as regulated in this Title, and in which no motor vehicles are equipped, repaired, hired and sold.

GATE: A structure that may be swung, drawn or lowered to block an entrance or passageway. A gate may be part of a fence or may exist separately.

GROSS DENSITY: Ratio between total number of dwelling units on a lot and total lot area in acres. The area to include local streets.

~~GROUND FLOOR AREA: The lot area covered by a principal building measured at grade from the exterior faces of the exterior walls, but excluding open porches or terraces, garages or carports.~~

~~GROUP HOME: A dwelling unit shared by no more than eight (8) persons not related by blood, marriage, adoption, or guardianship, plus their resident staff, who live together as a single housekeeping unit and in a long term family like environment in which staff persons assist in providing care, education and participation in community activities for the residents with the primary goal of enabling residents to live as self-sufficiently as possible in order to function at their maximum potential. A group home may be shared by groups such as, but not limited to, the disabled or persons fifty-five (55) years of age or older, but shall not include halfway houses, hospices, or living quarters which serve persons as an alternative to incarceration for a criminal offense.~~

~~GUEST, PERMANENT: A person who occupies or has the right to occupy a lodging house, hotel, apartment hotel or motel accommodation as his place of permanent residence.~~

HABITABLE VEHICLE: A vehicle designed, constructed or modified to permit its use as temporary or permanent living or working quarters, recreational vehicles and campers.

HEALTH CLUB: The meeting place of a group of persons organized for the purpose of improving the general condition of their health through exercise.

~~HELICOPTER: Any rotary wing aircraft which depends principally for its support and motion in the air upon the lift generated by one or more power driven rotors rotating on a substantially vertical axis.~~

HELIPORT (NOT FOR FREIGHT): Any area of land, water or structural surface which is designed, used or intended to be used for the landing and takeoff of helicopters and any pertinent areas which are designed, used or intended to be used for a heliport building or other facilities which have received a certificate of approval from the Division of Aeronautics, State of Illinois, Department of Transportation and a special use permit from the Village to operate said heliport.

HOME OCCUPATION: A gainful occupation or profession conducted entirely within a dwelling unit.(as further described in Chapter 6).

HOTEL: A building or buildings, sometimes designated as a motel, motor inn or highway hotel, containing not less than ~~fifty (50)~~ eighty (80) lodging rooms, where lodgings are

provided for compensation, ~~but excluding apartment hotels as defined in this Section~~. A hotel may include dining and meeting rooms, and business uses commonly incidental to a hotel operation.

HOTEL, APARTMENT: A hotel in which more than fifty percent (50%) of the accommodations are in dwelling units occupied or intended for occupancy by permanent guests.

INSTITUTION: A building occupied by a religious, educational, scientific or charitable not-for-profit corporation or organization, wholly for public or semi-public use.

JUNKYARD: A lot, with or without accessory structures, used for the abandonment, storage, keeping, collecting, buying, selling, exchanging, baling, packing, disassembling or handling scrap or discarded materials, including vehicles, machinery and equipment not in operable condition, or parts thereof, and other metals, paper, rags, rubber tires and bottles.

KENNEL Commercial: A place or premises where dogs, cats or other household domestic animals are maintained, boarded, bred or cared for, in return for remuneration, or are kept for the purpose of sale.

LAMBERT: 1/929 of a foot-lambert, usually used to designate intrinsic brightness of light sources.

LAUNDERETTE: A business that provides coin-operated self- service washing, drying, dry-cleaning or ironing facilities, provided no pickup or delivery service is maintained.

LOADING BERTH: A space within the principal building or on the same lot as the principal building providing for the standing, loading or unloading of trucks and with access to a street or alley.

~~LODGING HOUSE: A building originally designed for and used as a single or two-family dwelling, all or a portion of which contains lodging rooms which accommodate persons who are not members of the keeper's family and where lodging or meals, or both, are provided for compensation for three (3) or more persons.~~

~~LODGING ROOM: A room or suite of rooms rented as sleeping and living quarters, but without cooking facilities. In a suite of rooms, each room which provides sleeping accommodations shall be counted as one lodging room for the purpose of this Title.~~

LOT: A parcel of land consisting of adjoining parts which, at the time of filing for a building permit, is designated by its owner or developer as a parcel to be used, developed, or built upon as a unit, under single ownership or control. Therefore, a "lot" may or may not coincide with a lot of record.

LOT AREA: The area of a horizontal plane bounded by lot lines. For the purposes of meeting minimum lot area requirements, the land area of a lot used for providing private access rights of way shall not be included.

DRAFT

LOT, CORNER: A lot of which at least two (2) adjacent sides abut for their full lengths upon streets; provided, that the interior angle of the intersection of such two (2) sides ~~is less than one hundred thirty five degrees (135°)~~.

LOT COVERAGE: The percentage of a zoning lot's area covered by all roofed structures on the lot (i.e. principal and attached accessory structures), and NOT detached accessory structure.

LOT, INTERIOR: A lot that is not a corner lot.

LOT LINE ADJOINING A STREET: A front lot line, the side lot line of a corner lot which abuts a street, or a rear lot line of a through lot.

LOT LINE, FRONT: The boundary of a lot abutting a street. On a corner lot, either lot line may be construed to be the front lot line by the owner.

LOT LINE, INTERIOR: A lot line which does not abut a street.

LOT LINE, REAR: An interior lot line which is most distant from and is or is ~~almost~~ within 45 degrees of parallel to the front lot line, and in the case of an irregular- or triangular-shaped lot, ~~a line ten feet (10') in length within the lot, which is parallel to and~~ the corner point which is at a maximum distance from the front lot line.

LOT LINE, SIDE: An interior lot line which is not a front lot line or a rear lot line.

LOT LINES: The property lines bounding a lot.

LOT OF RECORD: A single lot which is part of a subdivision, the plat of which has been recorded in the office of the Recorder of Deeds of DuPage County, Illinois, which has a minimum lot area equal to or greater than ten thousand (10,000) square feet and a minimum lot width equal to or greater than sixty feet (60'); or any lot legally created prior to November 9, 1971, which: a) has a minimum lot area equal to or greater than ten thousand (10,000) square feet and a minimum width equal to or greater than sixty feet (60'); b) for which an assessment plat has been filed with the recorder of deeds of DuPage County, Illinois, pursuant to the provisions of 35 Illinois Compiled Statutes 205/35.

LOT, REVERSED CORNER: A corner lot, the street side lot line of which is substantially a continuation of the front lot line of the first lot to its rear.

LOT, THROUGH: A lot having frontage on two (2) streets, but excluding corner or reversed corner lots.

LOT WIDTH: The length of a line parallel to the street measured at the front lot line, except on a curvilinear street where it shall be a line parallel to the street measured at the setback line.

MANUFACTURING ESTABLISHMENT: A lot and structure, the principal use of which is manufacturing, fabricating, processing, assembling, repairing, storing, cleaning, servicing, or testing of materials, goods or products.

DRAFT

MARQUEE: A rooflike structure of a permanent nature which projects from the wall of a building.

MEDICAL CLINIC: A healthcare facility that is not a doctor's office but is primarily devoted to the care of outpatients who are treated without staying at the facility overnight. Either publicly or privately owned, medical clinics typically cover the primary healthcare needs of the population within the community. A medical clinic requires more than one (1) doctor.

MEMORIAL STRUCTURES: Aboveground structures within cemeteries: a) installed for the purpose of marking, commemorating, or honoring a deceased person and b) not used for the aboveground entombment of human remains, including, without limitation, grave stones, family estate markers, ornamental benches, vases and other decorative structures, and similar aboveground structures.

MICROBREWERY OR BREW PUB: A restaurant-brewery that brews beer primarily for sale in a restaurant and is dispensed directly from the brewery's storage tanks. Total production capacity shall not exceed 15,000 barrels per calendar year (465,000 gallons). One (1) U.S. barrel is equivalent to thirty-one (31) gallons.

MICRODISTILLERY: A small-scale artisan manufacturing business that blends, ferments, processes, packages, distributes, and serves alcoholic spirits on and off the premises and produces no more than 15,000 gallons per calendar year on-site. The micro distillery facility may include an ancillary tasting room and retail component in which guests/customers may sample and purchase the product. Offsite distribution of alcoholic beverages shall be consistent with state law.

MICROWINERY: Combination retail, wholesale and small-scale artisan manufacturing business that blends, ferments, processes, packages, distributes and serves wine for sale on or off-site, and produces no more than 100,000 gallons per year. The micro winery facility may include an ancillary tasting room and retail component in which guests/customers may sample and purchase the product. Offsite distribution of the vinous beverages shall be consistent with state law.

~~MICRON: A unit of length, equal to one-thousandth part of one millimeter (0.001 mm).~~

MOBILE FOOD VENDING (Food Trucks). A licensed, motorized vehicle or mobile food unit which is readily movable, motorized-wheeled vehicle or a towed vehicle where food items are sold to the general public, but which does not include mobile vending carts. A mobile food vehicle must be owned and operated by the owner, or agent of a licensed food establishment in the Village and must be affiliated with that establishment.

MOBILE HOME: A trailer designed and constructed or used for dwelling purposes which contains cooking, sanitary and electrical facilities, and has a gross floor area of four hundred twenty (420) square feet or more.

MOTOR VEHICLE: A passenger vehicle, habitable vehicle, truck, truck trailer, trailer or semitrailer propelled or drawn by mechanical power.

DRAFT

NAMEPLATE: A sign indicating the name and address of a building, or the name of an occupant thereof, and the practice of a permitted occupation therein.

NATURAL GROUND LEVEL: The existing elevation, prior to any movement of organic or nonorganic matter which would require the issuance of a permit under the ordinances of the village, or the proposed elevation as depicted on a subdivision grading plan approved by the village, or as otherwise reasonably determined by the village engineer.

NO ACCESS STRIP: A strip of land within and along a rear lot line of a through lot adjoining a street which is designated on a recorded subdivision plat or property deed as land over which motor vehicular travel shall not be permitted.

NONCONFORMING STRUCTURE: A structure lawfully established which: a) does not comply with all the regulations of this title governing the bulk of the district in which such structure is located; or b) is designed or intended for a nonconforming use.

NONCONFORMING USE: A structure and the use thereof or the use of land that does not conform with the regulations of this title governing use in the district in which it is located but which conformed with all of the codes, ordinances and other legal requirements applicable at the time such structure was erected, enlarged or altered, and the use thereof or the use of land was established.

~~NURSERY SCHOOL: A building containing facilities for the part time care of five (5) or more children of preelementary school age in addition to the dwelling unit of the family residing therein.~~

NURSING HOME: A building containing facilities for the care of and occupancy by aged, chronically ill, infirm or incurable persons, or a place of rest for those persons suffering bodily disorders, in which three (3) or more persons not members of the family residing on the premises are received, and provided with food, shelter and care, but not including hospitals, clinics or similar institutions devoted primarily to the diagnosis and treatment of disease or injury, maternity cases or mental illness.

OCTAVE BAND: A method of dividing the range of sound frequencies into octaves in order to classify sound according to pitch.

ODOR: The minimum concentration of odorous matter in the air that can be detected as an odor.

~~ODOR THRESHOLD: The minimum concentration of odorous matter in the air that can be detected as an odor. Odor thresholds for many materials and compounds can be found in table III, chapter 5, of "Air Pollution Abatement Manual", copyrighted 1951 by the Manufacturing Chemists Association, Inc., Washington, D.C.~~

OFF STREET PARKING FACILITY: A lot which is improved and used or a structure which is designed and used exclusively for the storage of passenger motor vehicles, either for accessory off street parking spaces or commercial off street parking spaces. T ~~When t~~he parking structure is an accessory building, it shall be compatible in appearance with the principal building. An off-street parking facility shall not be a principal use.

OPEN LAND: A single parcel of land in its natural state or used for agriculture, or outdoor recreational uses upon which there are located only structures incidental to the operation of such uses and upon which building coverage does not exceed two percent (2%) of the area.

OPEN SALES LOT (Automobile Sales): A lot occupied or used for the purpose of buying, selling, or renting merchandise stored or displayed out of doors prior to sale. Such merchandise includes automobiles, trucks, motor scooters, motorcycles, boats or similar commodities.

PARKING SPACE: A space, enclosed in a building or unenclosed, used for the parking of one automobile and which is accessible to and from a street or alley.

PARTICULATE MATTER: Finely divided solid or liquid matter, other than water, which is released into the atmosphere.

PARTY WALL: An interior wall of adjoining buildings extending from its footing to the underside of the roof, and which separates and is in common use by such adjoining buildings.

PERFORMANCE STANDARD: Criteria established to control smoke and particulate matter, noise, odor, toxic matter, vibration, fire and explosion hazards, glare and heat and radiation hazards generated by or inherent in uses of land or structures.

PERGOLA: An arbor formed of horizontal trelliswork supported on columns or posts, over which vines or other plants may be trained. (Also see definition of Arbor). For the purposes of this Title, a pergola is not a fence and is an accessory structure.

PERSONAL SERVICE: Personal services include those establishments which provide advice, designs, information, commercial education, consultation, job placement, advertising, finance, insurance and real estate services, generally from an office with no on-site storage of goods. This includes all types of business offices and service-type businesses where service is basically on an individual-to-individual or firm-to-firm basis, as opposed to services which are performed on objects or personal property.

~~PLAN COMMISSION: The plan commission of the village of Oak Brook, Illinois 2 .~~

PLANNING & ZONING COMMISSION: The Planning and Zoning Commission of the Village of Oak Brook is responsible for items of Section 13-14-4 and Section 13-14-7.

~~PRESERVATION PLAN: A proposal for residential development of existing building or buildings of historical, architectural or cultural significance containing the information required in subsection 13-6-4D2 of this title.~~

~~PRESERVATION RESTRICTION: A right, whether or not stated in the form of a restriction, easement, covenant or condition, in any deed, will or other instrument executed by or on behalf of the owner of the land or in any order of taking, appropriate to the preservation of areas, places, buildings or structures to forbid or limit acts of demolition, alteration, use or~~

~~other acts detrimental to the preservation of the areas, places, buildings or structures of historical, architectural or cultural significance.~~

~~PRESERVATION VISTA: A required open area on a lot measured from the principal structure to the lot lines or right of way, whichever is closer, within which no building or structure is permitted, except as specifically authorized pursuant to an approved preservation plan.~~

PRINCIPAL CORNERS: Not more than five (5) corners of a structure, two (2) of which are the corners having the lowest and next lowest elevations of all corners in the structure at the point where they intersect natural ground level.

~~PYROPHORIC DUST: A dust in a finely divided state in such concentration as to be combustible or explosive in air.~~

~~RADIATION HAZARDS: The deleterious and harmful effects of all ionizing radiation which shall include all radiation capable of producing ions in its passage through other matter. Such radiations shall include, but not be limited to, electromagnetic radiations such as X-rays and gamma rays and particulate radiations such as electrons or beta particles, protons, neutrons and alpha particles.~~

~~RESEARCH~~ LABORATORY: A building or group of buildings in which are located facilities for scientific research, investigation, testing or experimentation, but not facilities for the manufacture or sale of products, except as incidental to the main purpose of the laboratory.

~~RESERVOIR PARKING SPACES: Those off street parking spaces allocated for temporary standing of automobiles awaiting entrance to a particular establishment.~~

~~RINGELMANN CHART: The chart described in the U.S. bureau of mines information circular 6888, on which are illustrated graduated shades of gray for use in estimating the light obscuring capacity of smoke and smoke density.~~

~~RINGELMANN NUMBER: The number of the area on the Ringelmann chart that coincides most nearly with the visual density of emission or the light obscuring capacity of smoke.~~

ROADWAY: That portion of a street which is used or intended to be used for the movement of vehicles.

~~SENIOR CONGREGATE LIVING: Age-restricted or age-targeted housing for ages fifty-five (55) years or older, where limited or no assistance with daily living activities is needed by the residents and a state license is not required. "Senior congregate living" is a level of senior housing between age-restricted independent living facilities and assisted living facilities. The main difference between senior congregate living and assisted living is that senior congregate living facilities do not offer assistance with daily living activities.~~

SENIOR HOUSING: A multiple-family structure containing dwelling units controlled by a public body, nonprofit corporation for persons fifty five (55) years or older. Types of projects that fall under this definition include: independent living; assisted living; senior congregate living, and residential care facilities.

SETBACK: The minimum horizontal distance between a ~~street line/~~property line, ~~required side yard or required rear yard~~ and any part of a structure or any edge of the area of operation of a principal use when no structure is involved. For single-family homes, the setback is measured between the ~~street~~ property line, ~~side yard or rear yard~~ and the outside edge of any attached structural protrusion of the structure and/or eave (excluding gutters and light fixtures).

SHORT-TERM RESIDENTIAL RENTAL: A Residential Structure, as defined herein, offered for rent for a period which does not exceed thirty (30) consecutive days. The term "Short-Term Residential Rental" shall not include hotels.

SHORT-TERM RESIDENTIAL RENTAL PROPERTY OWNER: The individual or entity which has title to the property which is the subject of a Short-Term Residential Rental.

SHOWROOM – **FINAL DEFINITION TO BE DETERMINED**

> Showroom – Any location that: (1) displays or otherwise promotes (physically or electronically) merchandise available for sale; and (2) where more than 10% of annual gross sales (measured by dollar volume) of merchandise so displayed to patrons at such location are not subject to local Retailers Occupation Tax (as set forth in Section _____) at such location.

OR

> Showroom: means any physical business establishment or facility operated by a retailer engaged in the sale of tangible personal property, whether for or not for profit, that maintains limited to no available stock or supply of the tangible property being offered by the retailer on-premises, with the purpose of facilitating or engaging in any variation of on-premises selling activities--ranging from the preparation for, and the obtaining of, orders of such to the final consummation of the sales transaction --with the target consumer through means such as, but not limited to the display, showcasing, marketing, or testing of the type of tangible property being offered and of its related counterparts.

SIGN, POLITICAL: A sign or poster concerning candidates for office, public issues or similar matters. Such signs shall not exceed six (6) square feet in size, shall not be illuminated in any manner, shall not be affixed to any public utility, pole, tree or natural object, nor be located within a public right of way, nor create a safety or sight distance problem.

SMOKE: The visible discharge from a chimney, stack vent, exhaust or combustion process which is made up of particulate matter.

~~SMOKE UNIT: The number obtained when the smoke density in the Ringelmann number is multiplied by the time of emission in minutes. For the purpose of this calculation: a) a Ringelmann density reading shall be made at least once a minute during the period of observation; b) each reading is then multiplied by the time in minutes during which it is observed; and c) the various products are then added together to give the total number of smoke units observed during the entire observation period.~~

DRAFT

SOUND LEVEL: The intensity of sound of an operation or use as measured in decibels.

SOUND LEVEL METER: An instrument standardized by the American Standards Association for the measurement of the intensity of sound.

SPECIALTY RETAIL PROGRAM: One or more of the following uses and structures, when located within designated, interior areas of a shopping center, in districts where permitted as a special use, and where authorized as a special use: a) permanent pavilions and kiosks for the preparation, sale and consumption of food and beverages, including adjacent outdoor seating; b) seasonal, portable carts (also referred to as "mobile units" or "RMUs") for the sale of prepackaged food and beverages, including adjacent outdoor seating; c) seasonal merchandising zones containing a defined number of portable carts selling primarily nonfood merchandise and packaged food gift items not intended for immediate consumption; d) defined zones for product introduction or promotional activities, such as demonstrations and fashion shows; and e) entertainment and performance zones, including tables and chairs. "Seasonal" shall mean that weather permits the operation of the portable carts.

STABLE, PRIVATE: A private stable is any building which is located on a lot on which a dwelling is located, and which is designed, arranged, used or intended to be used for housing horses for the private use of occupants of the dwelling.

STABLE, PUBLIC: A building where horses are kept for remuneration, hire or sale.

STORY: That portion of a building, other than a cellar, included between the top surface of the next floor or roof above, except that a space used exclusively for the housing of mechanical services of the building shall not be construed to be a story if access to such space may be had only for maintenance of such services. The floor of a story may have split levels provided that there are not more than four feet (4') difference in elevation between the different levels of the floor. A basement shall be counted as a story and a mezzanine floor shall be counted as a story when it covers over one-third (1/3) of the area of the floor next below it, or if the vertical distance from the floor next below it to the floor next above it is twenty four feet (24') or more.

STORY ABOVE GRADE PLANE. Any *story* having its finished floor surface entirely above *grade plane*, or in which the finished surface of the floor next above is:

1. More than 6 feet (1829 mm) above *grade plane*; or
2. More than 12 feet (3658 mm) above the finished ground level at any point.

STORY, HALF: A partial story under a gable, hip or gambrel roof, the wall plates of which on at least two (2) opposite exterior walls are not more than three feet (3') above the floor of such story.

STREET: A permanent public or private right of way which affords a primary means of access to abutting property.

STREET FRONTAGE: All of the property fronting on one side of a street between two (2) intersecting streets, or in the case of a dead end street, all of the property along one side of the street between an intersecting street and the end of such dead end street.

STREET, INTERNAL: A street not located along the exterior boundaries of a planned development.

STREET LINE: The street right of way line.

STRUCTURAL ALTERATION: Any change in the supporting members of a structure, such as bearing walls, columns, beams or girders; or any substantial change in the roof or in the exterior walls, excepting such repair or replacement as may be required for the safety of the building.

STRUCTURE: Anything constructed or erected, the use of which requires more or less permanent location on the ground or attached to something having a permanent location on the ground, including, but not limited to, buildings, signs and pavements.

STRUCTURE HEIGHT: ~~The height of a structure as measured from a base elevation determined by averaging the elevations of the principal corners in the perimeter wall of the structure at natural ground level to the highest point of the structure.~~ See section 13-3-8 of this title.

~~THREE COMPONENT MEASURING SYSTEM: Instruments which measure simultaneously earthborne vibrations in horizontal and vertical planes.~~

~~TOWNHOME: A one-family dwelling unit, with a private entrance, which is part of a structure which contains three (3) or more dwelling units which are attached horizontally.~~

~~TOWNHOUSE, GROUP, ROW OR GARDEN APARTMENT: A. A dwelling joined to two (2) other dwellings by party walls, vertical cavity walls, or aboveground physically unifying horizontal structural elements;~~

~~B. A dwelling joined to one other dwelling by a party wall, and aboveground physically unifying horizontal structural elements.~~

TOWNHOME OR TOWNHOUSE (Attached Dwelling): A multiple family dwelling designed and constructed to accommodate three (3) or more dwelling units, with those units joined together by party walls or walls. Each unit shall have its own ground floor entrance and living space.

~~TOXIC MATTER: Those materials which are capable of causing injury to living organisms by chemical means.~~

TRAILER: A vehicle or portable structure which may be used as a conveyance on streets and highways by attachment to a motor vehicle.

DRAFT

TRELLIS: A framework of light wooden or metal bars, chiefly used as a landscape structure to support for fruit trees or climbing plants. For the purposes of this Title, a trellis is an accessory structure and is not a fence. Freestanding trellis' shall not exceed six feet (6') in height and ten feet (10') in length.

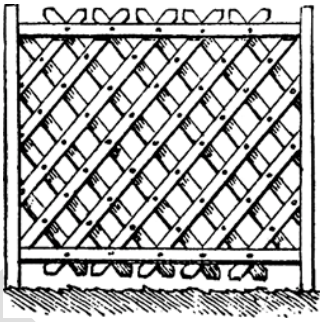

Trellis

USE: The purpose of activity for which the land and structures thereon is designed, arranged, or intended, or for which it is occupied or maintained, and shall include any manner of performance of such activity with respect to the performance standards of this title.

USE, LAWFUL: The use of any structure or land that conforms with all of the regulations of this title or any amendment hereto and which conforms with all of the codes, ordinances, and other legal requirements, as existing at the time of the enactment of this title or any amendment thereto, for the structure or land that is being examined.

USE, PERMITTED: A use which is or may be lawfully established in a particular district provided it conforms with all requirements, regulations, and when applicable, performance standards of this title for the district in which such use is located.

USE, PRINCIPAL: The dominant use of land or structures as distinguished from a subordinate or accessory use.

USE, SPECIAL: A use that has unusual operational, physical or other characteristics that may be different from those of the predominant permitted uses in a district, but which is a use that complements and is otherwise, or can be made, compatible with the intended overall development within a district. Compliance with special standards not necessarily applicable to other permitted uses or special uses in the district shall be required for a special use, as regulated in this title.

VEHICLE: Every device, in, upon or by which any person or property is or may be transported or drawn upon a highway except for devices moved by human power or used exclusively upon stationary rails or tracks.

VIBRATION: The periodic displacement, measured in inches, of earth at designated frequency cycles per second.

VILLAGE: The village of Oak Brook, Illinois.

VILLAGE CLERK: The village clerk of the village of Oak Brook, Illinois.

VILLAGE ENGINEER: The official of the village, duly appointed and designated as the village engineer.

VILLAGE PRESIDENT: The village president of the village of Oak Brook, Illinois.

WET DRAINAGEWAY: Any stream, creek, brook, branch, natural or artificial depression, slough, gulch, reservoir, lake, pond or natural or manmade drainageway in, or into which, stormwater runoff or floodwaters flow regularly.

YARD: A required open area on a lot which is unobstructed from its lowest level to the sky, except as otherwise provided in this title.

YARD ADJOINING A STREET, SIDE: A yard which is bounded by the front yard line, side yard adjoining a street line, rear yard line and side lot line adjoining a street.

YARD, FRONT: A yard which is bounded by the side lot lines, front lot line and the front yard line.

YARD, INTERIOR SIDE: A side yard which adjoins another lot or an alley separating such side yard from another lot.

YARD LINE, FRONT: A line in a lot that is parallel to the front lot line and which is not nearer to the front lot line at any point than the required front yard depth.

YARD LINE, REAR: A line in a lot that is parallel to the rear lot line and which is not nearer to the rear lot line at any point than the required rear yard depth. However, in the case of irregular or triangle shaped lots, the rear yard line location shall be formed by an arc originating at the corner point as defined in this section.

YARD LINE, SIDE: A line in a lot that is parallel to the side lot line and which is not nearer to the side lot line at any point than the required side yard depth.

YARD, REAR: A yard which is bounded by side lot lines, rear lot line and the rear yard line. In the case of irregular or triangle shaped lots, the rear yard dimension shall be determined by an arc originating at the corner point as defined in this section.

YARD, SIDE: A yard which is bounded by the rear yard line, front yard line, side yard line and side lot line.

~~ZONING BOARD OF APPEALS: The zoning board of appeals of the village of Oak Brook, Illinois, as created in this code 3 .~~

~~ZONING COMMISSION: The zoning commission of the village of Oak Brook, Illinois.~~

ZONING DISTRICT MAP: The zoning district map of the village of Oak Brook, Illinois.

ZONING DISTRICTS: The districts into which the village of Oak Brook, Illinois, has been divided as set forth on the zoning district map, for the purpose of zoning regulations and requirements. (Ord. G-60, 3-22-1966; Ord. G-135, 6-22-1971; Ord. G-142, 1-25-1972; Ord.

G-178, 12-9-1975; Ord. G-180, 4-13-1976; Ord. G-203, 12-14-1976; Ord. G-215, 4-26-1977; Ord. G-233, 5-31-1978; Ord. G-305, 9-8-1981; Ord. G-328, 8-24-1982; Ord. G-420, 12-13-1988; Ord. G-448, 7-10-1990; Ord. G-449, 8-14-1990; Ord. G-510, 6-8-1993; Ord. G-518, 8-10-1993; Ord. G-695, 3-26-2002; Ord. G-721, 6-10-2003; Ord. G-733, 11-11-2003; Ord. G-903, 11-10-2009; Ord. G-916, 1-12-2010; Ord. G-934, 9-28-2010; Ord. G-989, 1-22-2013; Ord. S-1559, 2-12-2019; Ord. G-1227, 1-24-2023)

~~Notes~~

~~1~~ ~~1. See Title 14 of this Code.~~

~~2~~ ~~1. See title 2, chapter 1 of this code.~~

~~3~~ ~~1. See title 2, chapter 8 of this code.~~

DRAFT

CHAPTER 3
GENERAL ZONING PROVISIONS

SECTION:

13-3-1: Control Over Use

13-3-2: Control Over Bulk

13-3-3: Lot Requirements

13-3-4: Yards

13-3-5: Setbacks Along Streets

13-3-6: Accessory Uses And Structures

13-3-7: Trailers, Boats And Habitable Vehicles

13-3-8: Structure Height

13-3-9: Public Utilities

13-3-10: Performance Standards

13-3-11: Mechanical Equipment To Be Screened

13-3-12: Access

13-3-13: Property Abutting Or Adjoining Conservation/Recreation District

13-3-14: Driveway Gates

13-3-15: Permanent Entryway Canopies

13-3-16: Portable Storage Units

13-3-17: Fence Regulations

13-3-18: Prohibited Uses

13-3-1~~8~~9: Cannabis Business Establishments Prohibited

13-3-1: CONTROL OVER USE:

A. The use of land and the erection, alteration and use of structures shall be limited to:

1. Uses lawfully established on the effective date of this title, subject to the regulations set forth in chapter 14 of this title.

2. Permitted uses or special uses permitted in the zoning district in which the land or structure is located.

Subject to the above limitations, no building or land shall be used, and no building shall be erected or altered for any purposes other than permitted in the zoning district in which the land or structure is located.

B. Where a use which is classified as a special use by this title exists as of the date of the first zoning ordinance for the village, it shall be considered to be a lawful special use.

C. Where a building permit for a structure has been issued in accordance with law prior to the effective date of this title and where construction has begun not more than six (6) months after such effective date and is being prosecuted to completion, said structure may be completed in accordance with such building permit and may be occupied upon completion under a certificate of occupancy for the use originally designated, subject to the provisions of chapter 13 of this title. (Ord. G-678, 6-26-2001)

13-3-2: CONTROL OVER BULK:

A. New and existing structures shall not be enlarged, constructed, reconstructed, structurally altered, converted or relocated in such a manner as to conflict with the bulk regulations for the district in which such structures are located except as provided for in this section or provided by relief granted pursuant to the provisions of chapter 14 of this title.

B. The provisions of this section shall apply to vacant lots and lots with existing dwellings in residential zoning districts.

C. Existing residential zoning district lots of record at the effective date of the first zoning ordinance of the village (ordinance G-60 adopted on March 22, 1966), or upon annexation shall have side yards of ten percent (10%) of the lot width or the side yard requirements of the underlying zoning district, whichever is less.

Required side yards shall be not less than ten feet (10') in depth; except a side yard may be not less than eight feet (8'), provided the adjoining lot contains a dwelling with an attached garage or carport adjacent to such side yard.

Where, due to existing building eaves, such lots have a legally established side yard(s) less than ten percent (10%) of lot width, second floor additions, in-line additions to the front or rear, and repair of the structures, continuing such eave setbacks are permitted.

D. A lot in a residence district at the effective date of the first zoning ordinance of the village (ordinance G-60 adopted March 22, 1966), which is not a lot of record but which is able to meet the requirements of this title as to lot area and width may be used for a single-family detached dwelling; provided, it shall meet all the other requirements of this title with the following additional requirements:

1. A plat of subdivision or an assessment plat will be recorded prior to the issuance of a building permit. The subdivision regulations [1] set forth the requirements pertaining to such plats.

E. A lot in a residence district at the effective date of the first zoning ordinance of the village (ordinance G-60 adopted March 22, 1966), which is not a lot of record and which is unable to meet the requirements of this title as to lot area or width may be used for a single-family detached dwelling; provided, it shall meet all the other requirements of this title with the following additional requirements:

1. The applicant shall furnish, with the application for a building permit, a survey by a duly licensed land surveyor, showing the lot upon which the applicant proposes to erect a single-family detached dwelling and also showing all lots adjacent to said lot with all improvements thereon and widths of the adjoining yards and any projections of structures therein duly plotted on said survey.

2. The applicant shall furnish an affidavit on the following form signed by the owner of record of the lot described in the application for a building permit:

STATE OF ILLINOIS:
COUNTY OF:

LOT OWNERSHIP AFFIDAVIT

Dated:
At:

TO: Director of ~~Community~~ Development Services
Village of Oak Brook

depose(s), and state(s) as follows:

1. That the title holder of record of the premises commonly known as Oak Brook, Illinois, and legally described as follows: (Insert Legal Description)

(Name of Title Holder)having acquired title on_____ and have held title continuously since said date.

2. (To be answered only if title holder of record is a corporation or a trust.) (Strike out portions that are not applicable.)

Corporation:

That your affiant is the (president, vice-president, secretary, treasurer) of the title holder of record and has full knowledge of the facts set forth in this affidavit and is authorized to make this affidavit.

Trust:

That your affiant holds a beneficial interest in and to the aforesaid trust, has full knowledge of the facts herein set forth and has full authority to make this affidavit.

3. That an application has been or will be filed for a building permit to erect a building or structure upon the land above legally described.

4. That neither the applicant nor any of his/her predecessors in title have owned any right, title or interest, directly or indirectly, or by any person, firm, corporation or trust, or by any officer, shareholder, director, partner, beneficiary, agent or immediate relative thereof who also holds any right, title or interest directly or indirectly, in or to any of the contiguous lot(s) within a period of ten years prior to the date of the application for a building permit or certificate for buildable site as to zoning, except:

5. That the following are the facts existing as to the lots adjoining and contiguous on all sides of the land as described in paragraph 1:

a. That none of the adjoining and contiguous lots are vacant and unimproved, except:

b. That none of the adjoining and contiguous lots have land in addition to its required side yards and required lot area under the Oak Brook Zoning Ordinance that could be added to the aforedescribed lot, thereby adding to the amount of land available for the subject lot, except:

and said additional land could not be acquired because:

6. That this affidavit is given to induce the Village of Oak Brook to issue a (building permit or certificate of buildable site as to zoning) for the above described premises.

7. Further your affiant sayeth not, except:

SUBSCRIBED AND SWORN
to before me this
*day of*_____ .

Notary Public

3. The ~~d~~Director of ~~community d~~Development Services shall issue a permit for erecting a single-family detached dwelling on the subject lot upon compliance with all of the foregoing provisions and all other applicable provisions of this title, with each required interior side yard reduced to not less than ten percent (10%) of the width of the lot, or the side yard requirement of the underlying zoning district, whichever is less, if all of the below enumerated requirements are met:

a. The subject lot:

(1) Is not adjoining and contiguous to a vacant lot on any side held under common ownership at any time after the year 1966; or

(2) Is not contiguous to an improved lot of record which has one foot (1') or more of an adjoining side yard in excess of the minimum required side yard for the district in which the building or structure is located, which additional side yard land could physically be added to the applicant's lot to increase its width or area or that the owners of the adjoining lots refuse to sell any portion of land that could be added to the applicant's lot to increase the width thereof without reducing the required side yards of the adjoining lots and which additional land the applicant would be willing to purchase; and

(3) Is not owned and has not been owned directly or indirectly or by a nominee of any person, or by an officer, shareholder, director, partner, beneficiary, agent or person related by blood or marriage or by any predecessors in title who also held or hold any right, title or interest in or to either one or both of the contiguous lots after the year 1966 to the date of application for a building permit.

b. Interior side yards shall not be less than ten feet (10') in depth except a side yard may be not less than eight feet (8') provided, the adjoining lot contains a dwelling with an attached garage or carport adjacent to such side yard.

c. The contiguous lots are not owned and have not been owned directly or indirectly or by a nominee of any person or by any officer, shareholder, director, partner, beneficiary, agent or person related by blood or marriage or by person related by blood or marriage or by any predecessors in title, who also held or hold any right, title or interest, directly or indirectly, in the applicant's lot after the year 1966 to the date of the application for a building permit.

d. The subject lot was not used as part of a single or common homesite by or with the consent of the same interests which owned or controlled an adjoining lot after the year 1966 to the date of application for a building permit.

e. In the event that a subdivision plat or an assessment plat has not been recorded, one will be required prior to the issuance of the building permit.

4. In the event that the owner is unable to meet all of the aforesaid additional requirements for a building permit, or for a lot which cannot meet the minimum lot width and lot area of a lot of record, or in the event that the owner either desires to sell or to buy from the owners of a contiguous lot or lots who also desire to either sell or buy, but the parties are unable to agree on a price, then the zoning board of appeals may recommend, and the village president and board of trustees may grant such relief in accordance with the procedures as set forth in this title for variations as deemed appropriate.

5. In no case, shall a contiguous lot from which property is being acquired be made nonconforming or more nonconforming without the necessary approvals in accordance with the procedures as set forth in this title. Plats of resubdivision or revised assessment plats shall be required for such properties.

~~F~~6. Notwithstanding anything contained in this title to the contrary, in the event at any time subsequent to January 1, 1995, private property is dedicated or conveyed to a governmental entity or condemned by a governmental entity (including, without limitation, the Illinois state toll highway authority) for the purpose of widening the public right of way or providing public roadway infrastructure (including, without limitation, right of way for roadway entry or exit ramps), the calculation of floor area ratio shall at all times include within the measurement of the area of the lot in question the area so dedicated, conveyed or condemned, provided that not more than twenty percent (20%) of the lot has been so dedicated, conveyed or condemned, and provided further that a site plan generally accommodating such a dedication, conveyance or condemnation has been reviewed and approved by the village. (Ord. G-678, 6-26-2001)

~~Notes~~

~~1~~ ~~1. See title 14 of this code.~~

13-3-3: LOT REQUIREMENTS:

A. Buildings On A Lot:

1. On single-family detached residence district lots with permitted uses, there shall be not more than one principal building.

2. In the event that more than one lot of record is necessary to satisfy the requirements of this title, a notice of encumbrance shall be recorded with the office of the county recorder of deeds against all affected lots of record prior to the issuance of any building permit.

B. Lot Divisions: No lot containing a use or structure shall hereafter be divided in order to secure one or more additional lots unless each lot resulting from such division, and including also the lot containing the use or structure, shall have the minimum lot area and lot width as required in this title for the district in which the lot is located and complies with the subdivision regulations of the village 1 . (Ord. G-678, 6-26-2001)

~~Notes~~

~~1~~ ~~1. See title 14 of this code.~~

13-3-4: YARDS:

A. Yards and other open spaces as required by this title shall be located on the same lot as the principal use or structure, and shall have not less than the minimum depth or area as required in this title for the district in which such use or structure is located, except as otherwise provided for setbacks.

B. On vacant through lots, the front lot line shall be along the street line designated by the ~~d~~Director of ~~community~~ ~~d~~Development Services, except that when a front lot line has been established on one or more lots in the same block and all have front lot lines established along the same street line, the street line designated as the front lot line for such lot or lots shall be the front lot line on all vacant through lots in such block. On through lots, only those uses and structures permitted by this title in front yards shall be located in that part of a rear yard adjoining a street that is equivalent in depth to a required front yard.

C. No legally required yards, open space, or lot area for any use or structure shall be used to satisfy yard, open space or lot area requirements for any other structure or use.

D. No yards allocated to a use or structure existing on the effective date of this title shall be subsequently reduced or further reduced below the yard requirements of this title, except a yard adjoining a street may be reduced in depth in the event and to the extent the right of way width of such street adjoining such yard is subsequently increased. In the event that the width of the right-of-way is increased, the original required yard and setback requirements, - at the time of construction- are not modified for the life of any legally existing structure or portion thereof.

E. Front yards of corner lots may be designated by the owner, provided such yard abuts a street. (Ord. G-678, 6-26-2001)

13-3-5: SETBACKS ALONG STREETS:

Minimum setbacks on lots abutting a street shall be as required for yards in the district in which they are located and shall be measured from the street line, or from the proposed street line if one has been designated on the official map. Notwithstanding anything contained in this title to the contrary, in the event at any time subsequent to January 1, 1995, private property is dedicated or conveyed to a governmental entity or condemned by a governmental entity (including, without limitation, the Illinois state toll highway authority) for the purpose of widening the public right of way or providing public roadway infrastructure (including, without limitation, right of way for roadway entry or exit ramps), the calculation of minimum setbacks and minimum required yards shall at all times be measured from the street line which existed prior to such dedication, conveyance or condemnation~~, provided that not more than twenty percent (20%) of the lot has been so dedicated, conveyed or condemned, and~~ provided that any newly constructed buildings establish minimum setbacks and minimum required yards on the affected lot (as measured from the new lot line created as a result of said dedication, conveyance, or condemnation) which, at a minimum, equal at least fifty percent (50%) of the minimum setback and minimum required yard which would be required in the absence of this condemnation mitigation provision, and provided further that a site plan generally accommodating such a dedication, conveyance or condemnation has been reviewed and approved by the village board of trustees. (Ord. G-977, 8-14-2012)

13-3-6: ACCESSORY USES AND STRUCTURES:

A. Authorization Of Accessory Uses And Structures:

1. Is subordinate in extent and purpose to, and serves, a principal structure or use;

2. Is customarily found as incidental to such principal structure or use;

3. Contributes to the comfort, convenience, or necessity of those occupying or being served by the principal use;

4. Except as otherwise expressly authorized by the provisions of this code, is located on the same zoning lot as such principal structure or use; and

5. Is under the same ownership and control as such principal structure or use.

B. General Regulations:

1. Accessory uses and structures shall be compatible with the principal use and shall not be established prior to the establishment of the principal use. No accessory building or structure shall be constructed on any lot prior to the construction of the principal building to which it is accessory.

2. Accessory uses shall not include the keeping, propagation or culture of pigeons, poultry, rabbits, bees, livestock or other non-household animals for profit, except on such lots where the pursuit of agriculture is a permitted principal or accessory use.

3. Except as otherwise regulated for specific principal uses, an accessory structure hereafter erected, altered, enlarged or moved in a lot shall conform with the following:

a. A detached accessory building shall not be nearer than ten feet (10') from the nearest wall of the principal structure.

b. An accessory structure shall not be located in any required yard abutting a street, except in rear yards where they adjoin a thoroughfare and are screened by opaque landscaping expected to reach the height of the applicable structure at full maturity.

c. Accessory uses and structures shall not be located, erected, or altered in required yards, except as provided in subsections B3d, B3g, and D of this section.

d. Detached accessory structures in a required rear yard in a residential district shall:

(1) Be not more than fifteen feet (15') in height except for detached garages that are not constructed with a continuous flat roof (see subsection B3g of this section for detached garage heights).

(2) Cover not more than thirty percent (30%) of the required rear yard (this includes, patios, pools, sheds, garages, accessory living units, pool houses, sports courts, etc.).

(3) Detached accessory structures equal to or less than one hundred twenty (120) square feet in total area shall be located at least five feet (5') from the side or rear lot line. Detached accessory structures greater than one hundred twenty (120) square feet in total area shall be located at least ten feet (10') from a side and rear lot line.

(4) Floor Area: The aggregate floor area of all accessory buildings shall not exceed thirty percent (30%) of the first floor area of the principal building (as measured by GLA ANSI or equivalent).

e. Detached accessory buildings and structures shall not be constructed between the front lot line and the front of the principal building on the lot (except as provided for in subsection B3f).

f. Accessory structures which otherwise are only permitted in required rear yards shall not be constructed within the buildable area between the principal structure and adjacent streets along the front or side lot lines unless a setback equal to double the required front or side yard setback is maintained from the front or side yard lot line to such accessory structure.

g. Detached garages, that are not constructed with a continuous flat roof, constructed in the "buildable" area of a lot will be permitted to be built to the same height as the principal structure. However, detached garages constructed in a required rear yard of a single-family home shall be limited to the following heights:

R1 district: Twenty five feet (25').

R2 district (lots 1 acre or larger): Twenty two and one-half feet (22.5').

R2 district (lots less than 1 acre) and R3 district: Twenty feet (20').

R4 district: Seventeen and one-half feet (17.5').

Any detached garage located in a required rear yard, that is over fifteen feet (15') in height, shall be required to increase the setback one foot (1') for every one foot (1') of increased height over fifteen feet (15'). Detached garages constructed with a continuous flat roof will be limited to a maximum height of fifteen feet (15').

C. Accessory Living Unit:

1. An accessory living unit is a detached accessory building that provides living space in a location other than the principal residence. An accessory living unit may be located in a pool house, detached garage, or other similar accessory building or structure.

2. Accessory living units are not permitted in the Business or Office Districts, or the R-2, R-3, R-4, or R-5 Districts.

3. Only one (1) accessory living unit is permitted per zoning lot in the R-1 District.

4. An accessory living unit originally constructed before January 24, 2023 is permitted. An expansion to an accessory living unit constructed prior to January 24, 2023 shall require a permit and shall comply with these standards. An expansion is considered additional floor area, modifications to room sizes, removal of walls and significant electrical or plumbing work that otherwise modifies the intended use of the dwelling unit.

5. No accessory living unit shall be modified to increase the number of dwelling units.

6. The construction of a new accessory living unit shall require the installation of fire sprinklers in accordance with applicable residential building code regulations.

7. An accessory building containing an accessory living unit shall be similar in architectural style and building materials to the principal use structure.

D. Permitted In Required Yards: Accessory uses and structures are permitted in required yards as follows with the following designations (and subject to the other provisions of this Code):

F = Yards adjoining streets

S = Interior side yards

R = Rear yards

	F	S	R
Arbors ~~or trellises~~, ~~where trellises are~~ or pergolas not attached to the principal structure	X	X	X
Accessory living unit			X
Commercial awnings or canopies, projecting not more than 15 feet into the required yards	X	X	X
Fallout shelters, detached			X
Fire escapes, open and enclosed or fire towers, not encroaching more than 5 feet, except 3.5 feet into a required interior side yard	X	X	X
Firewood storage 5 feet from property line			X
Garages or carports, detached			X
Gates, driveway (as regulated in Title 13)	X	X	
Growing of garden crops in the open		X	X
HVAC equipment including air condition units, not less than 12 feet from designated lot lines, subject to screening requirements of Title 13		X	X
Lawn furniture, such garden structures as benches, sundials, ~~birdbaths, and~~ fountains and water features	X	X	X
Open off street loading spaces			X
Open off street parking spaces, may be permitted in a required yard adjoining a street, as regulated in this title		X	X
Ornamental light standards	X	X	X
~~Terraces, p~~Patios, outdoor kitchens, and outdoor fireplaces			X
Playground and laundry drying equipment			X
Pool heaters, not less than 12 feet from designated lot lines, subject to screening requirements of Title 13.		X	X
Pool House (Accessory building)			X
Residential Awnings or canopies, projecting not more than 3 feet into the required yards	X	X	X

DRAFT

Sheds and storage structures for garden equipment and household items			X
Signs and nameplates	X	X	X
Solar panels (photovoltaic or thermal collectors) not less than 12 feet from designated lot lines.			X
Steps and/ or required egress ramps, open	X	X	X
Swimming pools			X
Tennis courts, sports courts			X
Trees, shrubs and other plants, except: ~~on corner lots where no such material shall be permitted to obstruct a clear path of motorists' vision of approaching vehicles within the area enclosed by any 2 intersecting curb lines or edges of pavement, as extended to their point of intersection if necessary, whichever is applicable, and a straight line connecting those 2 lines at points 60 feet from their point of intersection~~ 1) Where such plants obstruct Intersection Sight Distance as required by Bureau of Local Roads and Streets Manual, Chapter 28 And/or 2) As required by 425 ILCS 20 No object shall be constructed, maintained or installed within 48 inches of a fire hydrant. It shall be unlawful to install, maintain, construct or enlarge any barriers, trees, bushes, walls, or other obstacles which may hide or impede the use of a fire hydrant.	X	X	X
Trellises-Only allowed within the buildable area of the lot			
Wind energy systems- ground mounted in business and office districts only		X	X

(Ord. G-678, 6-26-2001; Ord. G-712, 1-14-2003; Ord. G-728, 8-12-2003; Ord. G-740, 2-10-2004; Ord. G-1021, 3-11-2014; Ord. G-1227, 1-24-2023)

13-3-7: TRAILERS, BOATS AND HABITABLE VEHICLES:

A. Trailers and vehicles shall not be permitted in any district as principal or accessory structures on a lot.

B. Outdoor storage in residential districts of h~~H~~abitable vehicles, utility trailers, horse trailers, boats on boat trailers or blocks, and other trailers shall ~~not be parked or stored in any required yard or in the open on any lot, except when permitted in this title, or in the operations of a lawfully established trailer or, habitable vehicle sales or manufacturing establishment~~
comply with the regulations in Chapter 6, Section 13-6-3, Regulations Applicable to All Residence Districts; provided no major repair, disassembly, or rebuilding operations are conducted thereon; and provided that no habitable vehicle so stored may be occupied.

C. Outdoor storage in commercial districts of ~~One~~ habitable vehicles, ~~and one~~ utility trailers, horse trailers, ~~or one~~ boats on a boat trailer or blocks, or one other trailers, ~~owned by the occupant of the dwelling, may be stored or parked only to the rear of said dwelling and not within any required side yard or rear yard of a lot containing a single-family detached dwelling; provided no major repair, disassembly, or rebuilding operations are conducted thereon; and provided that no habitable vehicle so stored may be occupied~~ shall not be parked or stored in any required yard or in the open on any lot, except when permitted in this title, or in the operations of a lawfully established trailer or, habitable vehicle sales or manufacturing establishment.

~~D. A habitable vehicle may be parked or stored in the driveway on property within the zoning jurisdiction of the village for a period of three (3) consecutive days without permit, and may be occupied during such period. Thereafter such a vehicle may be parked only after issuance of a permit by the director of community development permitting such parking. Such a permit may be issued by the director for the following purposes if the proposed use is consistent with the purposes of this title:~~

D. ~~1. For p~~Parking of habitable vehicles for use as temporary office or storage space incidental to and only for the period of time of construction of a building or series of buildings, provided such habitable vehicles are located on the same lot or contiguous lots to the building or series of buildings.

E. ~~2. For p~~Parking and occupancy of a vehicle on a lot containing a dwelling for a period not to exceed ten (10) days in any consecutive thirty (30) day period shall be permitted, ~~and~~ only if the location of said habitable vehicle on such lot does not violate the provisions of this title in relation to the placement of structures on such lot~~;~~. ~~except that s~~Such temporary parking shall be permitted on existing driveways notwithstanding that said driveway may be in a side yard. (Ord. G-678, 6-26-2001)

13-3-8: STRUCTURE HEIGHT:

A. No structure shall be erected, converted, expanded, reconstructed or structurally altered to exceed the height limit measured above the natural ground level, as determined by the village engineer, for the district in which the structure is located. However, this height limit for skylights, steeples, flagpoles, chimneys, radio and television aerials, wireless masts, or electric and telephone service poles anywhere in the village; and mechanical rooms, penthouses or roof structures for the housing of elevators, stairways,

tanks, ventilating fans or similar equipment, towers, water tanks, or elevators or other appurtenances anywhere in the village except residential districts, shall be thirty feet (30') above the height limits of the district in which they are located and shall be for ornamental purposes only and shall in no event be occupied. Structure height may be measured from a base elevation other than natural ground level only with the express approval of the village. However, an elevator housing enclosure for the purpose of providing a single elevator access to the penthouse level not to exceed three hundred twenty five (325) square feet in area may be erected to heights which do not exceed by more than twenty two feet (22') the height limits of the district in which it is located.

B. The height of single-family homes will be measured to the peak of the roof using one of the following methods:

1. In engineered subdivisions, as determined by the village engineer, the height will be measured using the recommended top of foundation elevation that is part of the approved grading plan;

2. In all other situations, the village engineer shall determine an elevation, from which the height will be measured, based on the existing grades and grades of adjacent properties;

3. For lots improved with an existing single-family home, the existing top of foundation elevation can be maintained and will be used as the base to measure the height of the structure.

C. The height limit, as it pertains to all other structures, shall not exceed the height limit above natural ground level established for the district in which the structure is located. (Ord. G-678, 6-26-2001; Ord. G-730, 9-23-2003; Ord. G-733, 11-11-2003; Ord. G-778, 4-26-2005)

13-3-9: PUBLIC UTILITIES:

The following public utility uses are permitted in any district: wires, cables, conduit, vaults, laterals, pipes, mains and valves, public warning devices, microcells or other similar transmission and distributing equipment (not including cellular telephone towers and ancillary equipment), provided that the installation and location thereof shall conform with the rules and regulations of applicable administrative authorities and ordinances of the village (See Title 6). ~~Microcells shall include a wireless communication facility consisting of an antenna that is either: a) four feet (4') in height and with an area of not more than five hundred eighty (580) square inches, or b) if a tubular antenna, no more than four inches (4") in diameter and no more than six feet (6') in length in the associated equipment cabinet that is six feet (6') or less in height and no more than forty eight (48) square feet in floor area. (Ord. G-678, 6-26-2001)~~

13-3-10: PERFORMANCE STANDARDS:

~~Any use established in any zoning district shall be operated so as to comply with the performance standard regulations prescribed in subsection A of this section.~~

The performance standards set forth in this Section are designed to protect the health, safety, and welfare of the residents of the Village of Oak Brook and to protect, maintain, and enhance the quality of the man-made and natural environments of the Village. All new and existing uses established within the Village shall comply with the performance standards set forth in this Article, unless any federal, state, county or local ordinance law or regulations established are more restrictive, in which event the more restrictive standard shall apply. Uses already established on the effective date of this ordinance shall be allowed to be altered, enlarged, expanded, or modified, provided that any such additions or changes comply with the performance standards set forth in this Section.

A. Noise:

1. Sound Levels: Sounds levels shall be measured with a sound level meter manufactured according to standards prescribed by the American National Standards Institute (ANSI). Measurements shall be made using a digital decibel meter. Impulse type noises shall be subject to the performance standards prescribed in this subsection A, provided that such noises shall be capable of being accurately measured. Noises incapable of being so measured, such as those of an irregular and intermittent nature, shall be controlled so as not to become a nuisance to adjacent uses. At any point on or beyond the boundary line of the district designated below, the sound pressure level of any operation or plant (other than background noises produced by sources not under control of this subsection A, such as the operation of motor vehicles or other transportation facilities) shall not exceed the decibel limits in the table below:

SOUND/NOISE LEVEL TABLE

Time Of Day	Maximum Permitted Decibel (dBA) Levels		
	Residential	Commercial	Industrial
Between 7:00 A.M. and 7:00 P.M.	65 dBA	70 dBA	70 dBA
Between 7:00 P.M. and 7:00 A.M.	55 dBA	60 dBA	65 dBA

2. General Requirements:

a. Sound Measurement Setback Requirement: All sound measurement readings must be set up not less than twenty five feet (25') (7.6 meters) from the property line noise

source. The twenty five foot (25') (7.6 meter) setback requirement is from the noise source and not the property line unless the noise source is contiguous to the property line.

b. Exempt Activities: Activities exempt from these provisions include the operation of motor vehicles or other transportation facilities; snow removal equipment; church bells/chimes; residential air conditioning units (installed and operating in accordance to manufacturer's specifications).

c. Unnecessary Noise Standards: The following activities are declared to be loud, disturbing and unnecessary noises in violation of this subsection A:

(1) Horns And Signaling Devices: The sounding of any horn or signaling device on any automobile or other motor vehicle on any street or public place of the village except as a danger warning.

(2) Animals Or Birds: The keeping of any animal or bird which, by causing frequent or continued noise, shall disturb the comfort or repose of any persons in the vicinity.

(3) Exhausts: The discharge into the open air of the exhaust of any engine, stationary combustion machine, generator, motorboat or motor vehicle except through a muffler or other device, which will effectively prevent loud noises therefrom. The use of emergency generators and other backup power sources would not apply to reasonable use during an emergency situation or during testing.

(4) Loading: The creation of loud and excessive noise in connection with the loading or unloading of any vehicles.

d. Additional Requirements; Lawn Mowing/Maintenance: It shall be unlawful to cause or make loud noise through the operation of lawn maintenance equipment including, but not limited to, lawn mowers, lawn blowers and tractors before seven o'clock (7:00) A.M. and after dusk on any day during the week. This restriction shall not apply to golf course, park district or forest preserve maintenance operations.

B. Other Performance Standards: Any use established in the various residence and business districts shall be operated so as to comply with the performance standard regulations set forth in section 13-10-3 of this title. (Ord. G-678, 6-26-2001; Ord. G-863, 7-22-2008)

13-3-11: MECHANICAL EQUIPMENT TO BE SCREENED:

~~All heating, air conditioning, ventilating, or other mechanical equipment located on the roof of any nonresidential structure in any residential, business or office-research-assembly district shall be screened on all sides or enclosed in such a manner consistent with the design and materials found on the principal building as to mask such equipment. (Ord. G-678, 6-26-2001)~~

All exterior equipment (i.e. HVAC, generators, pool equipment or other mechanical equipment) in all districts is required to be visually screened. (See 2801.2)

13-3-12: ACCESS:

All publicly dedicated rights of way for roadway or highway purposes or any land used, by easement or other means, for vehicular access which may be developed in any zoning district in the village, shall meet all requirements of the subdivision regulations of the village 1 . Where such access may be developed as part of a larger, continuous, regional street system, or where it may serve a subdivision located in part outside the corporate limits of the village, the design of said system shall be reviewed in accordance with the applicable provisions of all governing ordinances and shall be subject to all required public hearings and meetings before the plan commission, zoning board of appeals and village president and board of trustees prior to development. (Ord. G-678, 6-26-2001)

~~Notes~~

~~1 1. See title 14 of this code.~~

13-3-13: PROPERTY ABUTTING OR ADJOINING CONSERVATION/RECREATION DISTRICT:

All provisions in this title, as amended, which pertain to property abutting or adjoining a residence district shall be equally applicable to property abutting or adjoining any property zoned CR conservation/recreation district. (Ord. G-678, 6-26-2001)

13-3-14: DRIVEWAY GATES:

Driveway gates are permitted as accessory structures in required front yards, or side yards adjoining a street; provided that they conform with the following criteria:

A. Required Acreage: No driveway gate may be installed on a lot of less than two (2) acres, unless the front yard of said lot abuts a thoroughfare 1 . Any driveway gate previously approved and constructed in accordance with applicable law at that time shall be treated as a permitted and legally conforming use.

B. Direction Of Swing: Driveway gates shall not swing outward from the property.

C. Width: The minimum width for a gate structure shall be twelve feet (12') for opening the gate. All driveway gates shall be greater than fifty percent (50%) open in design when viewed from a ninety degree (90°) angle, except that this required open space in louver type gates may be viewed from any angle, and excluding metal gates with more than seventy five percent (75%) of its surface area open space.

D. Location Of Gates: Gates shall be located a minimum distance of twenty feet (20') from the nearest edge of pavement on local residential streets and thirty feet (30') from the nearest edge of pavement on all other streets including all thoroughfares and collectors (reference the Oak Brook transportation plan phase II report dated January 1971), to allow

adequate room for vehicular access to the property. (Ord. G-678, 6-26-2001; Ord. G-741, 2-10-2004)

~~Notes~~

~~1 2. See section 14-2-2 of this code.~~

13-3-15: PERMANENT ENTRYWAY CANOPIES:

Permanent entryway canopies to provide weather protection for persons being dropped off or picked up may be erected in required front and corner lot side yards for churches and hotel, restaurant and office use buildings permitted by this title, subject to the following conditions:

A. The required yard must be one hundred feet (100') or more in depth;

B. The area of the encroachment is limited to a maximum of six hundred (600) square feet;

C. The maximum depth of the encroachment into the required yard is thirty feet (30');

D. The minimum clearance for a canopy above a driveway or parking area shall be not less than fourteen and one-half feet (14.5'); and

E. The maximum height of the canopy is eighteen feet (18'). (Ord. G-678, 6-26-2001)

13-3-16: PORTABLE STORAGE UNITS:

A. For purposes of this section, a "portable storage unit" is defined as an enclosed container that is delivered to a private property and is normally used for the short term storage of items and materials associated with a move into or from the principal use of the property.

B. The following regulations shall apply to portable storage units:

1. No more than two (2) portable storage units shall be permitted on a property.

2. Stacking of portable storage units is prohibited.

3. Any property where a portable storage unit is located must be occupied by a principal use or dwelling.

4. No portable storage unit may remain on a property for more than fifteen (15) consecutive days. An additional fifteen (15) day period may be approved by the ~~department of community d~~Development Services department for cause. Special circumstances allowing for longer periods of time may be determined by the ~~d~~Director of ~~community d~~Development Services.

5. A portable storage unit on residential property shall not exceed sixteen feet (16') in length. A portable storage unit on nonresidential property shall not exceed forty feet (40') in length.

6. Portable storage units shall be placed on the driveway or other paved surface on the property.

7. The portable storage unit shall not be located closer than ten feet (10') from the principal structure on the property.

8. The portable storage unit shall not be used to store hazardous materials or flammable liquids.

9. Portable storage units shall not be placed on public property or permitted to obstruct traffic visibility.

10. A permit and fee (an amount, if any, to be determined by the village board from time to time) shall be required prior to the placement of a portable storage unit.

11. Portable storage units shall be maintained in good repair, free from rust, peeling paint, graffiti and other forms of deterioration.

12. Signage on portable storage units is limited to the name and address of the storage unit rental company.

13. Portable storage units shall be locked when not being loaded or unloaded. (Ord. G-861, 6-10-2008)

13-3-17: FENCE REGULATIONS:

A. For purposes of this section, the following terms shall have the following meanings:

DOG RUNS/KENNELS: Enclosures constructed for the purpose of containing dog(s) outside of the principal structure on a property.

FENCE: A structure used to delineate a boundary, or as a barrier, or as a means of confinement or for confinement.

FENCE HEIGHT: Measured from the top of the fence to pre-existing grade, irrespective of whether the fence has decorative caps and posts, as long as the caps and posts are no higher than four (4") inches. Fences built on retaining walls shall be measured from the existing elevation (as approved by the Village Engineer), prior to construction of a retaining wall, to the top of the fence.

FENCE TYPE STRUCTURE: Any fence, or part thereof, located in the buildable area of a property and not located in any required yard. "Fence type structures" include solid privacy screens and open patio enclosures. A "fence type structure" shall not include any part of a fence located outside of the buildable area of a property.

B. The following regulations shall apply to all fences other than fence type structures:

1. Fences shall have a minimum of fifty percent (50%) of the fence's surface area in open space as viewed from an angle of ninety degrees (90°) from the fence line. A fence's surface area shall include the surface area of any gates attached to the fence, but shall not include the surface area attributable to any supporting piers or pillars.

2. Solid fences shall be a maximum height of twenty four inches (24") and be constructed of wood, stone, brick or other masonry material. All nonsolid fences shall be a maximum height of forty two inches (42") and shall be constructed of wood, stone, brick, wrought iron, aluminum or synthetic materials that are molded and give the appearance of wood, stone, brick or wrought iron.

3. If a fence only has one finished side, the fence's finished side must face to the outside of the property. The finished side is the side that does not include the structural supports.

4. Fences shall be constructed at the pre-exiting grade or at a grade approved of by the village engineer. Fences shall not block or obstruct natural drainage or water flow. A fence that is installed in the floodplain shall be elevated a minimum of three inches (3") above the Village engineer approved grade and also be a minimum of fifty percent (50%) open.

5. Fences shall not be permitted in a front yard or alternate front yard setback (see diagrams), except when constructed with driveway gates as permitted in Section 13-3-14 of this Code.

6. All fences shall be located completely within the property that the fence is serving. No fence shall be constructed in a manner that encroaches upon another property or a village owned right of way without the prior approval of the village.

7. All fences shall be constructed and maintained in a manner that preserves the fence's structural integrity and original appearance.

8. Electrified fences, barbed wire, razor wire, spears and other sharp or hazardous materials are not permitted in the village, with the exception of those materials approved by the Development Services department for horse stables and other animal enclosures.

9. No fence shall be constructed or erected in a manner or in a location that interferes or obstructs the line of sight of vehicles using an intersection of an alley and street, or an intersection of two (2) streets.

10. All fences shall comply with all applicable village code requirements.

C. The following regulations shall apply to all fence type structures:

1. Fence type structures may screen hot tubs, patios, decks, sitting areas, or other similar types of uses.

2. Fence type structures may not exceed six feet (6') in height.

3. Fence type structures may not privatize the buildable area.

4. Fence type structures are not permitted in any required yard.

5. All fence type structures shall comply with all applicable village code requirements.

6. All fence type structures are subject to the review and approval of the Development Services department prior to their construction or erection to ensure that the requirements of this section are met.

D. Swimming Pool Fencing. Notwithstanding anything to the contrary contained in this section, the regulations applicable to fences surrounding any swimming pool or any other water feature that requires fencing pursuant to this code or state law shall be as follows:

1. Be a minimum of forty eight inches (48") in height;

2. Not exceed sixty inches (60") in height;

3. The location of a forty eight inch (48") to sixty inch (60") fence that surrounds a swimming pool shall only be in the rear yard or required rear yard setback of the lot. The fence shall also be located in the rear yard behind the principal use structure.

4. Comply with all other applicable requirements of this code. In addition, no fence surrounding a swimming pool may be made of chainlink or wire materials.

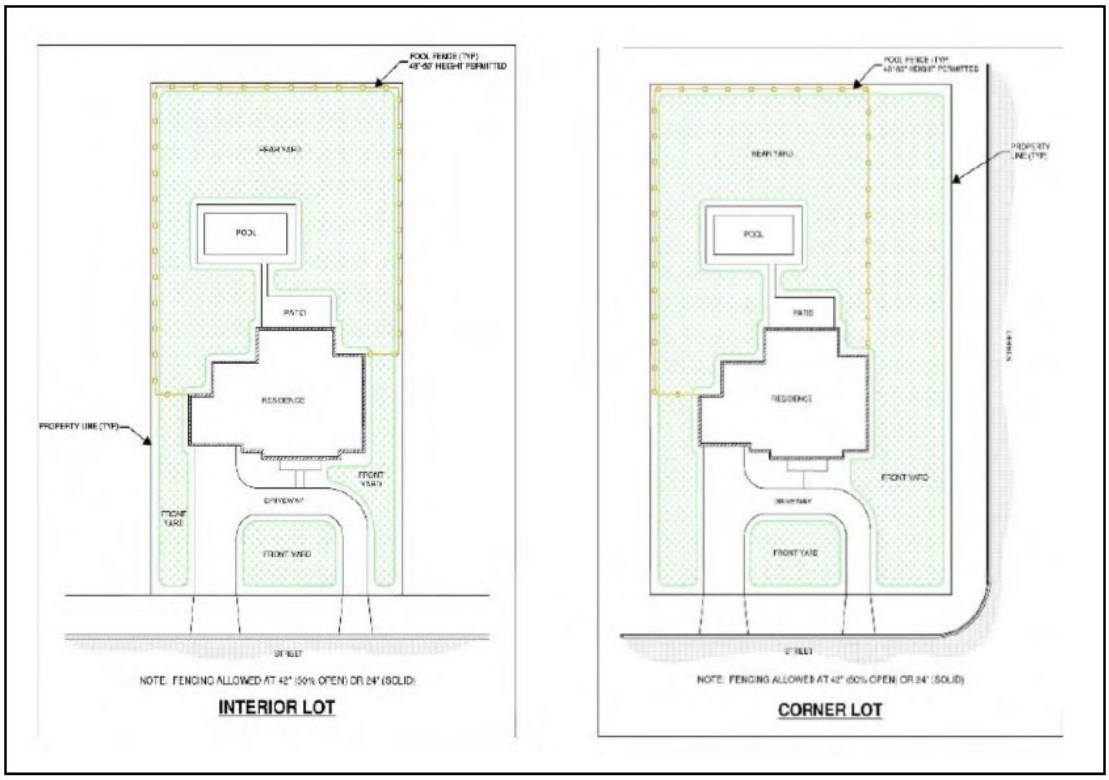

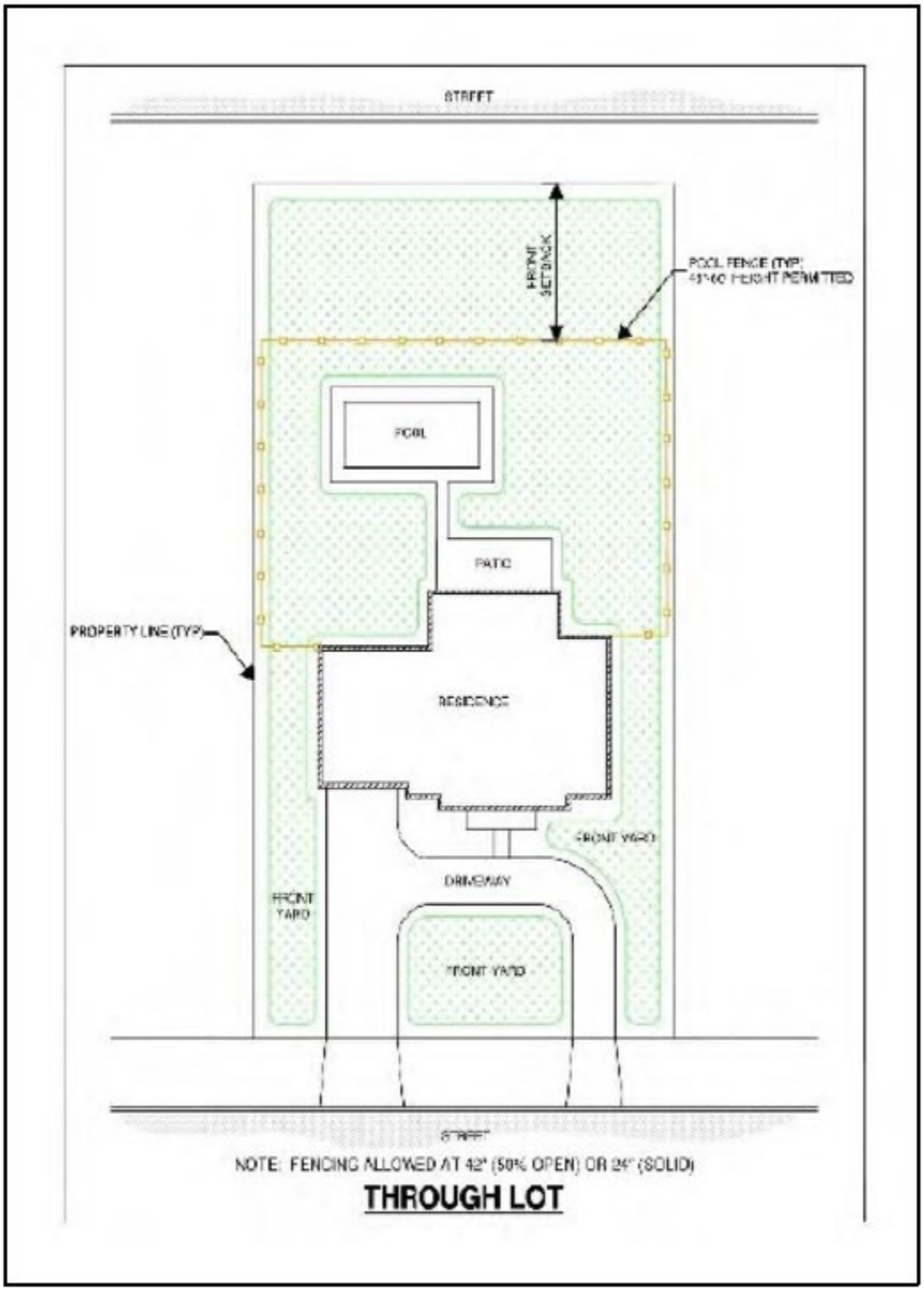

E. The following requirements shall apply to chainlink or wire fencing:

1. Chainlink or wire fencing shall be:

   a. Made of at least 9-gauge wire and not of a thinner gauge wire;

   b. Constructed with a top member or brace with a knuckle design;

c. Installed with the wire material (finished side) facing the neighboring property;

d. Painted or coated in a dark color (e.g., black, brown or dark green); and

e. Landscaped with year round plantings, bushes/vegetation or trees on both sides of the fence, except for dog runs/kennels, which shall be so landscaped on the outside of the fence; all required vegetation will be reasonably maintained or replaced as needed.

2. No chainlink or wire fencing shall include slats.

3. No chainlink or wire fencing shall be used for a dog run/kennel in any required yard. Chainlink or wire fencing may be used for dog runs/kennels that are constructed or erected in the buildable area of a property only behind the principal use structure.

4. Chainlink or wire fencing shall not be permitted:

a. In buildable areas. This restriction shall not apply to dog runs/kennels.

b. In any front or side yard.

c. In any rear yard unless the rear yard abuts the village's boundary. Notwithstanding anything to the contrary contained in this section, any such chainlink or wire fencing in a rear yard abutting the village's boundary shall not exceed a height of six feet (6').

d. Surrounding subdivisions unless: 1) landscape screening is installed and maintained in a manner that provides year round vegetation on both sides of the fence; and 2) the fence is approved by the village.

e. Around swimming pools.

f. Around sports courts/fields. This restriction shall not apply to fencing around sports courts for tennis, basketball, hockey and fields for baseball provided that: 1) the fence does not exceed ten feet (10') in height; 2) the court/field shall not be located in any required front or side yard; and 3) the fence must be constructed to the applicable ASTM standard.

5. Chainlink and wire fencing is permitted around construction sites only as a temporary use. The required height of construction fencing shall be established as part of the building permit approval process.

6. Chainlink and wire fencing shall be permitted along state and federal roadways.

7. In the event that a yard is enclosed with a chainlink fence that was installed prior to August 12, 2003, and one side of the fence enclosure is on a neighbor's property and the neighbor removes the chainlink fence, the owner may continue to enclose his/her yard with a chainlink fence by constructing a new fence on his/her property to replace the fence removed by the neighbor.

F. Fences and barriers along major arterials: If a formal barrier or sound wall system is not in place, a solid fence/wall structure may only be erected as follows:

DRAFT

1. The solid fence/wall structure is located along one of the following: Roosevelt Road, 22nd Street, Illinois Route 83/Kingery Highway, Interstate Highway I-88, or Interstate Highway I-294; and

2. The solid fence/wall structure is a single unified system that is approved by all affected property owners, the subdivision homeowners' association (if applicable) and the village of Oak Brook.

3. A solid fence/wall structure shall be considered a six foot (6') high board on board wood fence consisting of a natural wood finish unless otherwise determined by the subdivision homeowners' association.

G. Residential Subdivision Fences: Residential subdivisions are unique and vary in lot sizes, geography and adopted private codes, covenants and restrictions (CCR's). For these reasons, the following homeowners associations have fence code overlays that apply specifically to their subdivision.

1. Timber Trails - Merry Lane Subdivision.

a. The maximum fence height shall not exceed five feet (5') in the rear yard and required rear yard setback. Five foot (5') high fences shall be located behind the rear facade of the single-family residence.

b. A five foot (5') high fence shall not be permitted in an alternate front yard or alternate front yard setback.

c. A five foot (5') high fence shall be nonsolid and at least 50% open. Nonsolid fences shall be constructed of wood, stone, brick, wrought iron, aluminum or another synthetic material that is molded and gives the appearance of wood, stone, brick or wrought iron.

H. Commercial Fencing:

1. Trash receptacles, dumpsters and service areas shall be screened by a six foot (6') high wall to match the color and material of the principal use building and include metal gates, oriented whenever possible, to not be visible from nearby streets, sidewalks and customer views.

2. Mechanical equipment and generators shall be screened through the use of building design features such as wing walls or approved landscaping, minimizing the need for opaque fencing. If fencing is approved, it shall match the color and material of the principal use building.

I. Governmental Service Facilities and Public Utilities Fencing (excluding properties in the CR District):

1. Security fencing shall not exceed eight foot (8') in height.

2. Barbed wire and similar material are prohibited, except where deemed necessary and appropriate for Homeland Security purposes by the Chief of Police and the Development Services Director. (Ord. G-1021, 3-11-2014; Ord. G-1214, 6-14-2022)

13-3-18: Prohibited Uses**:** The following list of uses are specifically prohibited in the Village of Oak Brook. Any use determined by the Development Services department to be similar to the uses below shall also be prohibited.

A. Heavy Industrial Uses:
   1. Junk yards
   2. Metal salvage and recycling facilities
   3. Solid waste transfer stations
   4. Propane storage and distribution facilities
   5. Storage and Repair Facilities – semi-tractor trailer vehicles and
   6. Truck depot/truck stop

B. Astrology services, palm and tarot card readers, psychics, feng shui advisors, phrenology services
C. Pawn shops
D. Day-labor employment agencies
E. Commercial shooting range
F. Tattoo and body piercing parlor, not including ear piercing as part of a retail store or permanent makeup as part of a salon/ day spa.
G. Mobile Food Vending

13-3-19: CANNABIS BUSINESS ESTABLISHMENTS PROHIBITED:

A. For purposes of this section, the following terms shall have the following meanings:

ADULT-USE CANNABIS BUSINESS ESTABLISHMENT:	A cultivation center, craft grower, processing organization, infuser organization, dispensing organization or transporting organization.
ADULT-USE CANNABIS CRAFT GROWER:	A facility operated by an organization or business that is licensed by the Illinois Department of Agriculture to cultivate, dry, cure and package cannabis and perform other necessary activities to make cannabis available for sale at a dispensing organization or use at a processing organization, per the Cannabis Regulation and Tax Act, (P.A. 101-0027), as it may be amended from time-to-time, and regulations promulgated thereunder.
ADULT-USE CANNABIS CULTIVATION CENTER:	A facility operated by an organization or business that is licensed by the Illinois Department of Agriculture to cultivate, process, transport and perform necessary

	activities to provide cannabis and cannabis-infused products to licensed cannabis business establishments, per the Cannabis Regulation and Tax Act, (P.A.101-0027), as it may be amended from time-to-time, and regulations promulgated thereunder.
ADULT-USE CANNABIS DISPENSING ORGANIZATION:	A facility operated by an organization or business that is licensed by the Illinois Department of Financial and Professional Regulation to acquire cannabis from licensed cannabis business establishments for the purpose of selling and dispensing cannabis, cannabis-infused products, cannabis seeds, paraphernalia or related supplies to purchasers or to qualified registered medical cannabis patients and caregivers, per the Cannabis Regulation and Tax Act, (P.A.101-0027), as it may be amended from time-to-time, and regulations promulgated thereunder.
ADULT-USE CANNABIS EVENT:	Any public or private event operated by an organization or business where attendees can consume cannabis or cannabis products as part of any special event.
ADULT-USE CANNABIS INFUSER ORGANIZATION OR INFUSER:	A facility operated by an organization or business that is licensed by the Illinois Department of Agriculture to directly incorporate cannabis or cannabis concentrate into a product formulation to produce a cannabis-infused product, per the Cannabis Regulation and Tax Act, (P.A.101-0027), as it may be amended from time-to-time, and regulations promulgated thereunder.
ADULT-USE CANNABIS LOUNGE:	A facility operated by an organization or business where customers can consume cannabis in a social setting.
ADULT-USE CANNABIS PROCESSING ORGANIZATION OR PROCESSOR:	A facility operated by an organization or business that is licensed by the Illinois Department of Agriculture to either extract constituent chemicals or compounds to produce cannabis concentrate or incorporate cannabis or cannabis concentrate into a product formulation to produce a cannabis product, per the Cannabis Regulation and Tax Act, (P.A.101-0027), as it may be amended from time-to-time, and regulations promulgated thereunder.
ADULT-USE CANNABIS TRANSPORTING ORGANIZATION OR TRANSPORTER:	An organization or business that is licensed by the Illinois Department of Agriculture to transport cannabis on behalf of a cannabis business establishment or a community college licensed under the Community College Cannabis Vocational Training Pilot Program, per the Cannabis Regulation and Tax Act, (P.A.101-0027), as it may be amended from time-to-time, and regulations promulgated thereunder.

DRAFT

PERSON:	Any person, firm, corporation, association, club, society or other organization, including any owner, manager, proprietor, employee, volunteer or agent.

B. Cannabis Business Establishments Prohibited: The following adult-use cannabis business establishments are prohibited in the Village of Oak Brook. No person shall locate, operate, own, suffer, allow to be operated or aide, abet or assist in the operation within the Village of Oak Brook of any of the following:

Adult-Use Cannabis Craft Grower;

Adult-Use Cannabis Cultivation Center;

Adult-Use Cannabis Dispensing Organization;

Adult-Use Cannabis Event;

Adult-Use Cannabis Infuser Organization or Infuser;

Adult-Use Cannabis Lounge;

Adult-Use Cannabis Processing Organization or Processor; or

Adult-Use Cannabis Transportation Organization or Transporter.

C. Public Nuisance Declared: Operation of any prohibited cannabis business establishment within the Village of Oak Brook in violation of the provisions of this chapter is hereby declared a public nuisance and shall be abated pursuant to all available remedies.

D. Violations: Violations of this chapter may be enforced in accordance with the provisions of Chapter 14 of this code. (Ord. G-1154, 11-12-2019)

DRAFT

CHAPTER 5
CR CONSERVATION/RECREATION DISTRICT

SECTION:

13-5-1: Purpose

13-5-2: Permitted Uses

13-5-3: Special Uses

13-5-4: Lot Area Requirements

13-5-5: Additional Regulations

13-5-1: PURPOSE:

The CR Conservation/Recreation District is designed to encourage the development of land for open space recreational activities and/or preserve natural resources. This District is characterized by open uses of land, for example, golf courses and agricultural uses. The only structures and improvements permitted are those which supplement and are incidental to the principal open use. This District is not intended to encourage commercial or residential operations. (Ord. G-60, 3-22-1966)

13-5-2: PERMITTED USES:

Agricultural, including incidental agricultural structures.

Forest preserves, wildlife reservations, ecological sanctuaries and arboretums.

Golf courses, and similar open field recreational activities.

Parks and playgrounds.

Accessory uses and structures, incidental to and on the same zoning lot as a principal uses. (Ord. G-60, 3-22-1966; Ord. G-483, 3-10-1992)

13-5-3: SPECIAL USES:

Cultural facilities, including libraries, museums, and similar cultural institutions.

Educational facilities.

Gardens, botanical and zoological.

Governmental service facilities, including municipal civic centers, police and fire stations, village owned communication towers, and similar uses.

Historic facilities available to the public and used primarily for educational, cultural and/or historic purposes and activities in furtherance of the maintenance and support of the historic facilities as set forth in the applicable special use ordinance.

DRAFT

Public warning devices.

Tennis and swimming clubs.

Winter sports: ice skating rinks, ice hockey, curling, skiing or tobogganing, not less than twenty five (25) acres.

Accessory uses and buildings incidental to and on the same lot as the principal use. (Ord. G-60, 3-22-1966; Ord. G-483, 3-10-1992; Ord. G-566, 2-13-1996; Ord. G-608, 3-10-1998)

13-5-4: LOT AREA REQUIREMENTS:

A. Lot Area: Not less than five (5) acres.

B. Lot Width: Not less than two hundred twenty feet (220') within the buildable area.

C. Floor Area Ratio: Not to exceed 0.15.

D. Structure Height: Not more than thirty feet (30'). Special uses may not exceed forty feet (40').

E. Yards: Yards shall be provided as follows:

1. All yards shall be established according to the following requirements. No structure shall be erected or maintained:

a. Within one hundred feet (100') from the center thread of any waterway or watercourse;

b. Within one hundred feet (100') from the right-of-way line of any street; or

c. Within one hundred feet (100') from any adjacent residence district.

2. Notwithstanding the above, public utilities such as wires, cables, conduits, vaults, laterals, pipes, mains and valves and other similar transmission distributing equipment, bridges, fountains, sidewalks, gateways, flagpoles, roadways, and other similar structures intended to be accessory and incidental to the primary use of a principal building on the lot shall be permitted without regard to the setbacks established herein. (Ord. G-60, 3-22-1966; Ord. G-341, 1-24-1984)

13-5-5: ADDITIONAL REGULATIONS:

A. Off-Street Parking And Loading: Off-street parking and off-street loading shall be as set forth in Chapter 12 of this Title.

B. Performance Standards: Any use established in a conservation/recreation district shall be operated in compliance with the performance standards set forth in Section 13-10-3 of this Title. C. Signs And Awnings: Awnings, marquees and signs may be erected in conformance with the provisions of Section 13-10A-4 of this Title. (Ord. G-60, 3-22-1966; Ord. G-341, 1-24-1984)

CHAPTER 6
RESIDENCE DISTRICTS

SECTION:

13-6-1: Purpose

13-6-2: Home Occupations

13-6-3: Outdoor Storage -Vehicles

13-6-~~3~~4: Nameplates And Signs

~~13-6-4: Buildings Of Historical, Architectural Or Cultural Significance~~

13-6-5: Cluster Type Single-Family Detached Dwellings

13-6-6: Area, Bulk, Density And Setback Requirements

13-6-7: Short-Term Residential Rental

13-6-1: PURPOSE:

The residence districts provide for the development of various types of dwelling units within a framework of standards designed to:

A. Preserve and further promote low density single-family detached dwelling neighborhoods consistent with the predominant character of the village (R1-R2).

B. Encourage the development of medium density single-family detached dwelling neighborhoods where it is possible to provide public streets and utilities (R3-R4). ~~employ modern, efficient land planning techniques with smaller networks of utilities and pavements.~~

C. Provide housing options including attached residential units through the application of various lot sizes, dwelling types, and density (R5).

D. Provide flexibility in the design of residential development to include a mixture of residential uses, or the clustering of residential dwellings on smaller lots to allow for the preservation of open space, natural resources, and creation of recreational areas.

E. Provide for the economically sound and aesthetically pleasing use of areas characterized by their proximity to heavy traffic, the regional shopping center and light industry, including the use of town houses and garden type low density multiple-family dwellings. (Ord. G-60, 3-22-1966)

Regulations Applicable to all Residence Districts

13-6-2: HOME OCCUPATIONS:

In all residence districts, unless otherwise provided in the regulations of this title, any customary home occupation shall be permitted provided:

A. It is conducted entirely within the dwelling and only by members of the family, and when such home occupation is incidental and secondary to the use of the dwelling for dwelling purposes. The dwelling shall be the primary residence of the operators of the home occupation.

B. It is not conducted from a detached or attached accessory structure, requires no internal or external alterations and involves no construction features or use of equipment not customary in a dwelling.~~, and~~ T~~t~~he entrance to the space devoted to such occupation shall be from within the dwelling.

C. ~~and~~ N~~n~~ot more than one-fourth (1/4) of the permitted building coverage of the principal structure or basement shall be ~~the floor area of a story, including also a cellar of the dwelling, is~~ devoted to such home occupation.

D ~~C~~. There is no exterior display or activity that will indicate ~~from the exterior of~~ that the dwelling ~~that it~~ is being used for any use other than a dwelling.

E~~D~~. Stock in trade, including that which is produced on the premises, shall not require receipt or delivery of merchandise, goods or equipment other than by United States letter carrier mail, similar parcel delivery service or by private passenger automobile. ~~(Ord. G-60, 3-22-1966)~~

~~F. The operator or operators of the home occupation shall be his or her legal and primary place of residence;~~

1. No one may participate in or assist with the conduct or operation of a home occupation except:

   a. Individuals who meet the same residence requirements~~,~~ set forth in Section A. above;
   b. A nonresident assistant, subject to the following requirements and limitations:
      i. Participation by the nonresident assistant shall be in a subordinate capacity only, incidental to the conduct of the home occupation as for example, the services of a nurse, receptionist or clerical assistant in the home occupation of a physician;
      ii. The nonresident assistant shall not participate, totally or partially, in the capacity as an additional operator of the home occupation, as an additional practitioner of the professional, craft or occupational service of the operator, or as a partner or professional associate thereof.

G. There shall be no change in the outside appearance of the building or premises or other visible evidence of the conduct of such home occupation.

DRAFT

H. Alterations shall not be made to the interior of the dwelling which would render it undesirable for residential use.

I. No vehicular traffic substantially greater than normal in the adjacent residential area is permitted.

J. Any activity, use, type of materials, or quantity of materials that is illegal or would be classified by the adopted International Building Code as High-Hazard Group H., creates visible or audible interference in radio and television receivers, or causes fluctuations in line voltage outside the dwelling units is prohibited.

K. No permitted home occupation(s) shall interfere with the reasonable use and enjoyment of adjacent residential properties.

13-6-3: OUTDOOR STORAGE- VEHICLES

For all Residence Districts, the following regulations apply to outdoor storage:

A. The overnight storage of commercial vehicles outside in any building area or required yard is prohibited.

B. The storage of recreational vehicles is permitted as long as the following requirements are met:

1. Storage of a recreational vehicle may only be located on lots 1 acre or more in size;

2. The storage area for a recreational vehicle must not be located within the front yard and must not be in front of the façade of the principal building on the lot; and

3. Screening of the vehicle must be provided. The screening must be a permanent year round screening with either evergreen plantings or a combination of evergreen plantings and permanent fencing or masonry materials as permitted by the Village Code.

13-6-~~3~~4: NAMEPLATES AND SIGNS:

See chapter 11 of this title. (Ord. G-60, 3-22-1966; Ord. G-203, 12-14-1976; Ord. G-510, 6-9-1993; Ord. G-549, 1-24-1995; Ord. G-586, 4-8-1997; Ord. G-695, 3-26-2002)

DRAFT

~~13-6-4: BUILDINGS OF HISTORICAL, ARCHITECTURAL OR CULTURAL SIGNIFICANCE:~~

~~A. Purpose: The purpose of this special use category is to provide a method of preserving institutional buildings in existence prior to the incorporation of the village which are of historical, architectural or cultural significance for use as residential dwellings.~~

~~B. Criteria: In addition to the standards set forth in subsection 13-14-9E of this title, no special use may be granted hereunder unless:~~

~~1. The existing building has historical, architectural or cultural significance according to one or more of the following criteria:~~

~~a. Its character, interest or value as part of the development, heritage, or cultural characteristics;~~

~~b. Its identification with a person or persons who significantly contributed to the development of the community, county, state or country;~~

~~c. Its exemplification of the cultural, religious, economic, social, political or historic heritage of the community;~~

~~d. Its embodiment of distinguishing characteristics of an architectural style valuable for the study of a period, type, method of construction or use of indigenous materials;~~

~~e. Its identification as the work of a master builder, designer or architect whose individual work has influenced the development of the community, County, State or country;~~

~~f. Its embodiment of elements of architectural design, detail, materials or draftsmanship which represent a significant architectural innovation;~~

~~g. Its unique location or singular physical characteristics representing an established or familiar visual feature of a neighborhood or the community; and~~

~~2. The building is suitable for preservation and continued use of conversion as residential dwellings.~~

~~C. Findings: In addition to the findings required under subsection 13-14-9E of this Title, no special use may be granted hereunder unless findings are made that:~~

~~1. The building in question has historical, architectural or cultural significance according to one or more of the criteria set forth in this Section;~~

~~2. The proposed preservation plan does in fact preserve the existing building as a historical, architectural or culturally significant structure;~~

~~3. The building is suitable for preservation and continued use or conversion as residential dwellings.~~

~~D. Procedure:~~

~~1. The applicant shall file concurrently:~~

DRAFT

~~a. An application for a special use as herein provided; and~~

~~b. An application for approval of a proposed preservation plan, which applications shall be processed in the manner prescribed in subsection 13-14-9D of this Title.~~

~~2. The proposed preservation plan shall include:~~

~~a. Information addressing the criteria set forth in subsection B of this Section;~~

~~b. Floor plans showing, in detail, existing and proposed uses of all areas of the building;~~

~~c. A plat of survey of the property involved showing the location of all existing structures and a site plan showing the location of all proposed structures and existing structures to be retained;~~

~~d. A statement detailing the nature of any alteration to existing interior or exterior architectural features specifically identifying those features to be preserved and/or restored;~~

~~e. A topographical analysis of the site with contour intervals of not more than two feet (2');~~

~~f. Information on existing and proposed water mains, sanitary sewers, storm sewers, storm water retention and runoff, stream channels, floodplains and floodways, lakes, ponds or other public improvements;~~

~~g. A study of traffic engineers providing information on the impact of the development on public streets and intersections;~~

~~h. A plat or map showing the land uses, physical features, and zoning of all adjacent lands within four hundred (400) yards of the property involved;~~

~~i. A proposed fire protection plan detailing the description and location of proposed fire protection equipment and automatic sprinkler systems;~~

~~j. A set of plans detailing existing and proposed exterior elevations, a list of any items being removed from the exterior of the building, and typical details for existing and proposed windows, doors, bays and balconies.~~

~~3. No special use as provided herein may be issued until a preservation plan has been approved as provided herein, provided that such a special use may be approved upon the condition that the final preservation plan, detailing the information required in subsection D2 of this Section and accompanying documents required in subsection D4 of this Section be submitted to and approved by the corporate authorities within a reasonable time as specified in the ordinance approving the special use.~~

~~4. The final preservation plan shall be accompanied by:~~

~~a. Final plans and specifications for all public improvements reasonably required for implementation of the preservation plan. Such plans and specifications shall comply with all applicable standards of the Village for said public improvements;~~

DRAFT

~~b. A draft of all necessary or advisable covenants, easements, preservation restrictions and condominium declarations acceptable in form and substance to the Village.~~

~~E. Bulk Standards: The bulk standards established in this Section shall apply except as follows:~~

~~1. Structure Height: Structure height of existing buildings shall be established as necessary to preserve and restore such buildings, provided that no existing structure may exceed its existing structure height or elevation.~~

~~2. Ground Floor Area Per Dwelling: Not less than nine hundred (900) square feet.~~

~~3. Floor Area Per Dwelling: Not less than two thousand four hundred (2,400) square feet.~~

~~4. Parking:~~

~~a. Two (2) parking spaces for each dwelling unit and reserved for each said dwelling unit; and~~

~~b. One parking space for each dwelling unit for visitor and guest parking.~~

~~5. Density: No more than three (3.0) dwelling units per acre.~~

~~6. Preservation Vista: Not less than one hundred fifty feet (150').~~

~~7. Lot Area: Not less than twelve (12) acres. (Ord. C-328, 8-24-1982)~~

13-6-5: CLUSTER-TYPE SINGLE-FAMILY DETACHED DWELLINGS:

Residential development of cluster-type single-family detached dwellings shall meet the following criteria:

A. Bulk Standards: The bulk standards of this Section shall apply except as follows:

1. Structure Height: Not more than thirty feet (30') above the highest point of the foundation.

2. Density: Not more than two and three-tenths (2.3) dwelling units per acre, provided the total lot area does not exceed twenty two percent (22%) of gross land area.

3. Lot Area: Not less than three thousand seven hundred (3,700) square feet.

B. Lot Width: Not less than fifty three feet (53') as determined at the rear lot line.

C. Yards: Distances between buildings, public or private rights of way and subdivision boundaries, which shall apply in lieu of the zoning yard requirements for the R3 District, shall be not less than:

1. Sixteen feet (16') from the side wall eaves to the side wall eaves;

2. Seventy feet (70') from the rear wall eaves to the rear wall eaves;

3. Twenty feet (20') from the front wall eaves to the right of way or access easement line;

4. Fifteen feet (15') from the side wall eaves to the right of way or access easement line;

5. Fifteen feet (15') from the rear wall eaves to the right of way or access easement line; and

6. Thirty five feet (35') from the rear wall eaves to the subdivision boundary.

Patios, decks, roof overhangs, chimneys and bay windows shall be permitted within an exclusive easement adjoining the front, rear and side lot lines. This easement may also provide utility access, provided that any structures in the easement do not conflict with the needs of any utility.

D. Subdivision Controls: All common areas shall be titled to and maintained by a homeowners' association as open space for joint use by the residents of the subdivision. At least eighty percent (80%) of occupied dwellings within the subdivision shall be occupied by at least one person who is fifty five (55) years of age or older, and all occupants must be eighteen (18) years of age and older, and this restriction shall be included within the covenants, conditions and restrictions recorded with the plat of subdivision. (Ord. G-618, 9-22-1998)

13-6-6: AREA, BULK, DENSITY AND SETBACK REQUIREMENTS

A. Building Coverage

1. For the purpose~~d~~ of calculating the primary building lot coverage for single-family dwellings, the access easements or 'handle' for lots-in-depth shall not be included in determining total lot square footage. The Lot Coverage is the percentage of a zoning lot's area covered by all roofed structure on the lot (i.e. principal and attached accessory structures), and NOT detached accessory structure (See Chapter 3 of this Title).
2. Rear Yard Lot Coverage (Section 13-3-6. B. d. (2)) includes all rear yard improvements (1.e. patios, pools, sheds, garages, accessory living units, pool houses and sports).
3. Building facades in the residential districts shall have exterior wall material consisting of 50% stone or brick for each side of the building (not including areas for windows and doors).

SECTION 13-6-7: SHORT-TERM RESIDENTIAL RENTAL

DRAFT

SHORT-TERM RESIDENTIAL RENTAL: A Residential Structure, as defined herein, offered for rent for a period which does not exceed thirty (30) consecutive days. The term "Short-Term Residential Rental" shall not include hotels.

SHORT-TERM RESIDENTIAL RENTAL PROPERTY OWNER: The individual or entity which has title to the property which is the subject of a Short-Term Residential Rental.

13-6-7A: PURPOSE AND APPLICABILITY:

It is the intent and purpose of this Section (Short-Term Residential Rental) to preserve the character and integrity of residential neighborhoods within the Village by prohibiting Residential Structures from being used for the commercial purpose of providing Short- Term Residential Rentals.

13-6-7B: SHORT-TERM RESIDENTIAL RENTALS PROHIBITED:

1. It shall be unlawful for any person or entity to operate, use, offer for rent or use, or advertise for rent or use, any property within the Village of Oak Brook as a Short-Term Residential Rental.

2. It shall not be considered a Short-Term Residential Rental when the preceding owner of a property maintains possession of a Residential Structure after closing for the sale thereof but leases the property back from the successor owner for a period of time pursuant to a written agreement.

13-6-7C: PUBLIC NUISANCE DECLARED:

Operation of any Short-Term Residential Rental within the Village of Oak Brook in violation of the provisions of this Chapter may be deemed a public nuisance and abated pursuant to all available remedies, including but not limited to injunctive relief. In addition to the penalties provided for herein, the Village of Oak Brook shall be entitled to receive from the Short-Term Residential Rental Owner reimbursement for the cost of the Village's reasonable attorney fees, costs and expenses incurred by the Village of Oak Brook to abate a Short- Term Residential Rental operating as a public nuisance.

13-6-7D: PENALTIES:

Any Short-Term Residential Rental Owner or other person or entity who violates any of the provisions set forth or referenced in this Chapter, shall be subject to the following penalties:

1. A fine of one thousand dollars ($1,000.00) for a first offense within a 12-month period, and a fine of two thousand five hundred dollars ($2,500.00) for a second or subsequent Offense within a 12-month period.

2. Each day that a violation of this Chapter continues shall be considered a separate and distinct offense and a fine shall be assessed for each day a provision of this Chapter is found to have been violated. Notwithstanding the forgoing, the escalation of fines as set forth above shall not occur until a prior adjudication of a violation against the same individual or entity has been entered.

3. Continued violations of this Chapter are subject to an injunction to enforce this Chapter.

NOTICE OF VIOLATION: See Section 13-14-11

ARTICLE A. R1 SINGLE-FAMILY DETACHED RESIDENCE DISTRICT

SECTION:

13-6A-1: Permitted Uses

13-6A-2: Special Uses

13-6A-3: Lot Area Requirements

13-6A-4: Additional Regulations

13-6A-1: PERMITTED USES:

Home occupations.

Nameplates and signs.

Parks and playgrounds.

Public schools, parochial school, nonboarding elementary, junior high and high, on lots not less than eight (8) acres in area for an elementary school and not less than twenty five (25) acres in area for a high school.

Single-family detached dwellings.

Accessory uses and structures, subject to the following:

A. Uses and structures customarily accessory to single-family dwellings.

B. Noncommercial pursuit of agriculture: 1) on lots not less than ten (10) acres in area, provided structures and land used for the shelter, feeding, keeping, propagating, culture of poultry and livestock shall not be less than one hundred feet (100') from the nearest lot line, and any other structure or land used in the pursuit of agriculture shall not be less than one hundred feet (100') from the nearest street line, and not less than fifty feet (50') from the

DRAFT

nearest interior and rear lot line; and 2) on lots less than ten (10) acres in area, provided such uses involve only the growing of farm and garden crops and nursery stock and no accessory structures are used exclusively for such uses, except conservatories or greenhouses of the types customarily attached to dwellings.

C. Dwelling units for housing domestic servants or other persons employed on the premises and guest houses.

D. Horse stables, private, on lots not less than two (2) acres in area; provided that no more than two (2) horses are kept, except that one additional horse may be kept for each one acre of additional lot area over two (2), and no structure used for shelter shall be nearer than ninety feet (90') from side and rear lot lines and one hundred fifty feet (150') from front lot lines, or any streets; such stables to be subject to the following standards:

1. The stable must not be detrimental to or endanger public health or safety;

2. The stable must not be injurious to the use and enjoyment of property in its immediate vicinity nor diminish or impair property values in the neighborhood;

3. Adequate utility service and drainage facilities must be provided and approved by the Village Engineer;

4. The storage area for manure must meet the same setback requirements of stable building location;

5. Manure removal must meet the requirements of the Department of Health of DuPage County and must be so scheduled in frequency so as not to be offensive or injurious to public health;

6. A pest control program must be instituted to meet the requirements of the Department of Health of DuPage County.

E. Storage of building materials and equipment and temporary structures for construction purposes, when on the same or adjoining lot as the principal uses and for a period of not to exceed the duration of such construction.

F. Temporary construction and sales offices in subdivisions containing forty (40) acres or more in area, for a period not to exceed ninety (90) days following completion of such construction. (Ord. G-60, 3-22-1966)

13-6A-2: SPECIAL USES:

Agricultural: Growing of farm and garden crops and nursery stock as a principal use on a lot, provided:

A. The lot area for commercial growing of farm crops, truck garden produce, and nursery stock shall be not less than ten (10) acres in area.

B. The sale of such materials is not conducted from a store, stand or other structure erected or maintained for such purpose.

Cemeteries (subject to compliance with the regulations in chapter 16 of this title): Any existing cemetery and structure shall be deemed to have a special use permit as required by this section, notwithstanding whether these existing cemeteries and structures comply, as of January 22, 2013, with the provisions of chapter 16 of this title. Any expansion, change, or new construction relating to an existing cemetery and structure shall comply with chapter 16 of this title, but any such activity shall not require a new or amended special use permit, or other zoning relief, provided that the activities comply with chapter 16 of this title. Notwithstanding the foregoing, no special use permit granted pursuant to this section, whether for an existing cemetery and structure or for a new cemetery or structure, shall permit a community burial structure to be built in a residence district.

Churches, chapels, temples and synagogues: On lots not less than three hundred feet (300') in width and not less than two (2) acres in area and one additional acre for each two hundred forty (240) seats in the sanctuary over two hundred forty (240) seats. Where churches and parochial schools are on the same land, not less than eight (8) acres in area.

Cultural and recreational facilities: Outdoor and indoor cultural and recreational facilities including, but not limited to, swimming pools, tennis courts, meeting facilities and other similar facilities accessory to and owned in common by the owners of properties within a residential subdivision.

Public utility, transportation, and government facilities: Public utility, transportation, and governmental service facilities, including municipal offices and civic centers, public libraries, police and fire stations, public works facilities, village owned communication towers, conference of municipal governments and ancillary uses (including organizations which provide consultation solely to units of local government), and similar uses.

Recreational and cultural uses: The following recreational and cultural uses, public or private, provided the site meets the minimum area requirements hereinafter stipulated:

A. Golf courses and clubs, standard or par 3, when operated only during daylight hours, but not including commercially operated miniature courses or golf driving ranges, not less than twenty five (25) acres.

Accessory uses: Accessory uses, customarily incidental to the above special uses, including, but not limited to, agricultural, recreational and cultural uses, as follows:

A. Clubhouses and lodges, containing customary facilities incidental to the operation of the principal recreational use including, but not limited to, restaurants, cocktail lounges and shops primarily for the sale and service of equipment and other commodities related to participation in the recreational facilities on the premises on lots not less than two (2) acres in area, and provided further that the restriction relating to operation only during daylight hours does not apply to the accessory uses.

B. Horse stables, kennels and other similar structures, for keeping and shelter of livestock, other animals, poultry and game, and accessory structures, provided that such structures shall be located: 1) not less than one hundred fifty feet (150') from a street; 2) not less than one hundred feet (100') from a structure on the same lot intended for occupancy as a dwelling; 3) not less than one hundred feet (100') from a residence district line; 4) not less than seventy feet (70') from a nonresidence district line; and 5) on lots not less than ten (10) acres in area. (Ord. G-60, 3-22-1966; Ord. G-328, 8-24-1982; Ord. G-483, 3-10-1992; Ord. G-571, 6-11-1996; Ord. G-608, 3-10-1998; Ord. G-675, 3-27-2001; Ord. G-938, 11-9-2010; Ord. G-989, 1-22-2013)

13-6A-3: LOT AREA REQUIREMENTS:

A. Lot Area: Except as otherwise required in this title for a specific use, not less than two (2) acres.

B. Lot Width: Not less than two hundred twenty feet (220') within the buildable area.

C. Floor Area Ratio: Not to exceed 0.4 ~~for nonresidential uses~~.

D. Maximum Lot Coverage (Principal Structures): Not to exceed .20.

E. Structure Height:

1. Residential uses: Not more than fifty feet (50'), except for continuous flat roofs, which shall be not more than thirty five feet (35') to the top of any parapet wall. However, where residential building heights exceed thirty feet (30'), the highest space that can be occupied must have an emergency escape and rescue opening at a maximum elevation of thirty two feet (32') above grade.

2. Nonresidential uses: Not more than forty five feet (45') excluding village owned communication towers, which may not exceed a height of one hundred twenty feet (120').

F. Ground Floor Area Per Dwelling:

1. One story: Not less than two thousand (2,000) square feet.

2. Bilevel: Not less than one thousand eight hundred (1,800) square feet.

3. Dwellings having more than one story: Not less than one thousand five hundred (1,500) square feet.

G. Yards: Except as required in subsections 13-6A-1B and D of this article, under "accessory uses and structures", yards shall be provided as follows:

1. Front: Not less than fifty feet (50') in depth, except front yards abutting York and Cermak Roads shall have a depth of not less than one hundred feet (100').

2. Side: Not less than thirty feet (30') in depth, except: a) a side yard abutting a street shall be not less than fifty feet (50') in depth, and for nonresidential uses each interior side yard

shall be increased by not less than two feet (2') for each one foot (1') of structure height over thirty feet (30').

3. Rear: Not less than one hundred feet (100') in depth. (Ord. G-60, 3-22-1966; Ord. G-616, 8-11-1998; Ord. G-730, 9-23-2003; Ord. G-938, 11-9-2010; Ord. G-977, 8-14-2012)

13-6A-4: ADDITIONAL REGULATIONS:

A. Off Street Parking And Loading: Off street parking and loading shall be as provided in chapter 12 of this title. (Ord. G-60, 3-22-1966)

DRAFT

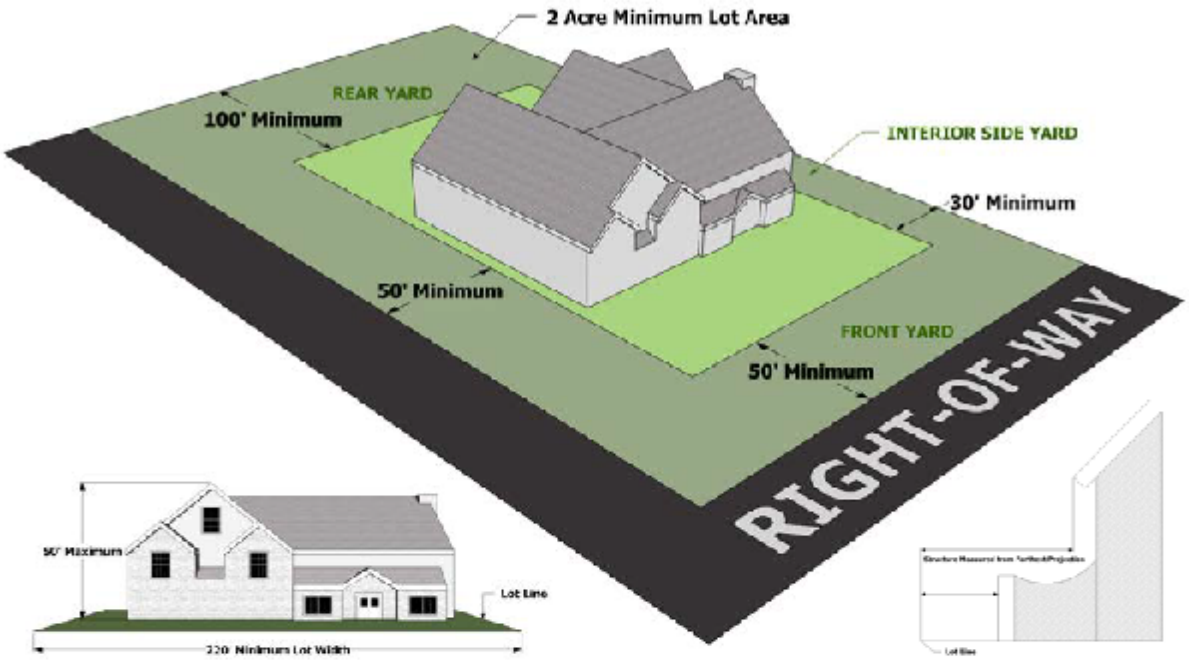

R1 SINGLE-FAMILY DETACHED RESIDENCE DISTRICT		
Standard For:	**Residential Use**	**Non-Residential Use**
Minimum Lot Area	2 acres	2 acres
Minimum Lot Width	220'	220'
Maximum Structure Height [4]	50' or 35' [1]	45'
Maximum Lot Coverage (Principal Structures)	0.20	0.20
Maximum FAR	0.4	0.4
Minimum Yard Setbacks		
Front Yard	50' or 100' [2]	50' or 100' [2]
Interior Side Yard	30'	30' [3]
Street Side Yard	50'	50'
Rear Yard	100'	100'
Minimum Ground Floor Area per Dwelling		
Single Story	2,000 sq. ft.	-
Bilevel	1,800 sq. ft.	-
Two or more stories	1,500 sq. ft.	-

[1] For continuous flat roofs.

[2] For yards abutting York and Cermak Roads

[3] Increased 2' for each 1' of structure height over 30'

[4] Where residential building heights exceed thirty feet (30'), the highest space that meets the criteria of Sections R304, R305 & R311.4 for habitable space shall have an emergency escape and rescue opening in compliance with Section R310 at a maximum elevation of thirty two feet (32') above grade. This section shall be applied regardless of the usage designation on the construction documents, including "storage" or "bonus" rooms.

ARTICLE B. R2 SINGLE-FAMILY DETACHED RESIDENCE DISTRICT

SECTION:

13-6B-1: Permitted Uses

13-6B-2: Special Uses

13-6B-3: Lot Area Requirements

13-6B-4: Additional Regulations

13-6B-1: PERMITTED USES:

Permitted uses shall be those as in the R1 single-family detached residence district. (Ord. G-60, 3-22-1966)

13-6B-2: SPECIAL USES:

Special uses shall be those as in the R1 single-family detached residence district. (Ord. G-608, 3-10-1998)

13-6B-3: LOT AREA REQUIREMENTS:

A. Lot Area: No less than one acre, except as otherwise required in this title for a specific use.

B. Lot Width: Not less than one hundred fifty feet (150') within the buildable area.

C. Floor Area Ratio: Not to exceed 0.4 ~~for nonresidential use~~.

D. Maximum Lot Area Coverage (Principal Structures): Not to exceed .20.

E. Structure Height:

1. Residential Uses: Not more than forty five feet (45') for lots one acre or larger and forty feet (40') for lots less than one acre, except for continuous flat roofs, which shall be not more than thirty five feet (35') to the top of any parapet wall. However, where residential building heights exceed thirty feet (30'), the highest space that can be occupied must have an emergency escape and rescue opening at a maximum elevation of thirty two feet (32') above grade.

2. Institutional And Other Nonresidential Uses: Not more than forty five feet (45').

F. Ground Floor Area Per Dwelling:

1. One Story Without Basement: Not less than one thousand eight hundred (1,800) square feet.

2. One Story With Basement: Not less than one thousand six hundred (1,600) square feet.

3. Dwellings Having More Than One Story: Not less than one thousand two hundred fifty (1,250) square feet.

G. Yards: Except as required in subsections B and D under "accessory uses and structures" in section 13-6A-1 of this chapter, yards shall be provided as follows:

1. Front: Not less than forty feet (40') in depth.

2. Side: Not less than eighteen feet (18') in depth except:

a. A side yard abutting a street shall not be less than forty feet (40') in depth;

b. To accommodate a side load garage, the minimum side yard setback (on 1 side yard) must be at least twenty three feet (23'); the width of the pavement opposite of the garage door must be a minimum of twenty three feet (23');

c. For nonresidential uses each side yard abutting a street shall be not less than fifty feet (50') in depth and each interior side yard shall be not less than thirty feet (30') in depth and increased by not less than two feet (2') for each one foot (1') of structure height over thirty feet (30').

3. Rear: Not less than sixty feet (60') in depth. (Ord. G-60, 3-22-1966; Ord. G-328, 8-24-1982; Ord. G-616, 8-11-1998; Ord. G-730, 9-23-2003)

13-6B-4: ADDITIONAL REGULATIONS:

A. Off Street Parking And Loading: Off street parking and loading shall be as provided in chapter 12 of this title. (Ord. G-60, 3-22-1966)

DRAFT

R2 SINGLE-FAMILY DETACHED RESIDENCE DISTRICT		
Standard For:	**Residential Use**	**Non-Residential Use**
Minimum Lot Area	1 acre	1 acre
Minimum Lot Width	150'	150'
Maximum Structure Height [4]	45' or 35' [1]	45'
Maximum Lot Coverage (Principal Structures)	0.20	0.20
Maximum FAR	0.4	0.4
Minimum Yard Setbacks		
Front Yard	40'	40'
Interior Side Yard	18' or 23' [2]	30' [3]
Street Side Yard	40'	50'
Rear Yard	60'	60'
Minimum Ground Floor Area per Dwelling		
Single Story	1,800 sq. ft.	-
Bilevel	1,600 sq. ft.	-
Two or more stories	1,250 sq. ft.	-

[1] For continuous flat roofs.

[2] Minimum interior yard setback to accommodate side load garage. Setback is measured from the farthest projection of the building, not the building foundation. The width of the pavement in front of the garage door must be a minimum of twenty-three feet (23').

[3] Increased 2' for each 1' of structure height over 30'

[4] Where residential building heights exceed thirty feet (30'), the highest space that meets the criteria of Sections R304, R305 & R311.4 for habitable space shall have an emergency escape and rescue opening in compliance with Section R310 at a maximum elevation of thirty two feet (32') above grade. This section shall be applied regardless of the usage designation on the construction documents, including "storage" or "bonus" rooms.

ARTICLE C. R3 SINGLE-FAMILY DETACHED RESIDENCE DISTRICT

SECTION:

13-6C-1: Permitted Uses

13-6C-2: Special Uses

13-6C-3: Lot Area Requirements

13-6C-4: Additional Regulations

13-6C-1: PERMITTED USES:

Permitted uses shall be those as in the R1 single-family detached residence district. (Ord. G-60, 3-22-1966)

13-6C-2: SPECIAL USES:

Special uses shall be those as in the R1 single-family detached residence district; and

Residential development of cluster type single-family detached dwellings intended for occupancy by persons fifty five (55) years of age or older, and all occupants at least eighteen (18) years of age or older, on parcels not less than thirty (30) acres in area 1 .

Residential development of existing buildings of historical, architectural or cultural significance 2 . (Ord. G-60, 3-22-1966; Ord. G-83, 4-9-1968; Ord. G-203, 12-14-1976; Ord. G-608, 3-10-1998)

Notes

1 1. See section 13-6-5 of this chapter.

2 2. See section 13-6-4 of this chapter.

13-6C-3: LOT AREA REQUIREMENTS:

A. Reduction Of Lot Area: Not less than twenty five thousand (25,000) square feet, except that in subdivisions of eighty (80) acres or more in area, the lot area may be reduced to one-half (1/2) acre provided that lands equal to ten percent (10%) of the total area be dedicated to the village, or agency approved by the village board, for park or recreational uses and no portion of which shall be less than four (4) acres. The dedicated land shall be appropriate for park or recreational uses, and shall not include wet drainageways in excess of twenty five percent (25%) of the total dedicated area.

B. Lot Width: Not less than one hundred feet (100') within the buildable area.

C. Floor Area Ratio: Not to exceed 0.4 ~~for nonresidential uses~~.

D. Maximum Lot Area Coverage (Principal Structures): Not to exceed .20.

E. Structure Height:

1. Residential Uses: Not more than forty feet (40') except for continuous flat roofs, which shall be not more than thirty feet (30') to the top of any parapet wall. However, where residential building heights exceed thirty feet (30'), the highest space that can be occupied must have an emergency escape and rescue opening at a maximum elevation of thirty two feet (32') above grade.

2. Institutional And Other Nonresidential Uses: Not more than forty five feet (45').

F. Ground Floor Area Per Dwelling:

1. One story: Not less than one thousand five hundred (1,500) square feet.

2. Bilevel: Not less than one thousand three hundred (1,300) square feet (floors at grade and above basement).

3. Dwellings having more than one story: Not less than one thousand (1,000) square feet.

G. Yards: Except as required in subsections 13-6A-1B and D of this chapter under "accessory uses and structures", yards shall be provided as follows:

1. Front: Not less than forty feet (40') in depth.

2. Side: Not less than twelve feet (12') in depth except:

a. A side yard abutting a street shall be not less than forty feet (40') in depth;

b. To accommodate a side load garage, the minimum side yard setback (on 1 side yard) must be at least twenty three feet (23'); the width of the pavement opposite of the garage door must be a minimum of twenty three feet (23');

c. For nonresidential uses each side yard abutting a street shall be not less than fifty feet (50') in depth and each interior side yard shall be not less than thirty feet (30') in depth and increased by not less than two feet (2') for each one foot (1') of structure height over thirty feet (30').

3. Rear: Not less than forty feet (40') in depth. (Ord. G-60, 3-22-1966; Ord. G-83, 4-9-1968; Ord. G-203, 12-14-1976; Ord. G-730, 9-23-2003; Ord. G-977, 8-14-2012)

13-6C-4: ADDITIONAL REGULATIONS:

A. Off Street Parking And Loading: Off street parking and loading shall be as provided in chapter 12 of this title. (Ord. G-60, 3-22-1966)

DRAFT

R3 SINGLE-FAMILY DETACHED RESIDENCE DISTRICT		
Standard For:	**Residential Use**	**Non-Residential Use**
Minimum Lot Area	25,000 sq. ft.	25,000 sq. ft.
Minimum Lot Width	100'	100'
Maximum Structure Height [4]	40' or 30' [1]	45'
Maximum Lot Coverage (Principal Structures)	0.20	0.20
Maximum FAR	0.4	0.4
Minimum Yard Setbacks		
Front Yard	40'	40'
Interior Side Yard	12' or 23' [2]	30' [3]
Street Side Yard	40'	50'
Rear Yard	40'	40'
Minimum Ground Floor Area per Dwelling		
Single Story	1,500 sq. ft.	-
Bilevel	1,300 sq. ft.	-
Two or more stories	1,000 sq. ft.	-

[1] For continuous flat roofs.

[2] Minimum interior yard setback to accommodate side load garage. Setback is measured from the farthest projection of the building, not the building foundation. The width of the pavement in front of the garage door must be a minimum of twenty-three feet (23').

[3] Increased 2' for each 1' of structure height over 30'

[4] Where residential building heights exceed thirty feet (30'), the highest space that meets the criteria of Sections R304, R305 & R311.4 for habitable space shall have an emergency escape and rescue opening in compliance with Section R310 at a maximum elevation of thirty two feet (32') above grade. This section shall be applied regardless of the usage designation on the construction documents, including "storage" or "bonus" rooms.

ARTICLE D. R4 SINGLE-FAMILY DETACHED RESIDENCE DISTRICT

SECTION:

13-6D-1: Permitted Uses

13-6D-2: Special Uses

13-6D-3: Lot Area Requirements

13-6D-4: Additional Regulations

13-6D-1: PERMITTED USES:

Permitted uses are those as in the R1 single-family detached residence district. (Ord. G-60, 3-22-1966)

13-6D-2: SPECIAL USES:

Special uses are those as in the R1 single-family detached residence district; and

Single-family detached, attached and semidetached dwellings, on parcels not less than fifty (50) acres in area, provided that the gross density of each such development shall not exceed three (3) dwelling units per acre; the structure heights shall not exceed thirty feet (30'); no structure shall contain more than two and one-half (21/2) stories; the ground floor living area per dwelling shall not be less than one thousand three hundred (1,300) square feet for a one story dwelling and nine hundred (900) square feet for a dwelling of more than one story; the minimum distance between principal buildings, as measured between bearing walls, shall be not less than twenty feet (20'), except that this distance may be reduced by two feet (2') if one of such walls encloses an attached garage or carport and by four feet (4') if each of such walls encloses an attached garage or carport; provided further, that each principal building shall be set back at least thirty feet (30') from dedicated public streets, off street loading and off street parking requirements shall be as provided in chapter 12 of this title; and provided that a preliminary development plan indicates sufficiently clearly the proposed streets, rights of way, lot sizes and setbacks, so that the village board in granting approval of such preliminary plan may clearly define the areas of any special restrictions it may wish to impose and that approval of the final subdivision plan shall be subject to same. (Ord. G-60, 3-22-1966)

13-6D-3: LOT AREA REQUIREMENTS:

A. Lot Area:

1. Not less than eighteen thousand (18,000) square feet, except that in subdivisions forty (40) acres or more in area, the lot area may be reduced to fifteen thousand (15,000) square feet provided that lands equal to ten percent (10%) of the total area be dedicated to the village, or agency approved by the village board, for park or recreational uses and no portion of which shall be less than four (4) acres.

2. For single-family detached dwellings, the dedicated land shall be appropriate for park or recreational uses, and shall not include wet drainageways in excess of twenty five percent (25%) of the total dedicated area.

B. Lot Width: Not less than seventy five feet (75') within the buildable area.

B. Floor Area Ratio: Not to exceed 0.4 ~~for nonresidential uses~~.

C. Maximum Lot Area Coverage (Principal Structures): Not to exceed .20.

E. Structure Height:

1. Residential Uses: Not more than thirty five feet (35') except for continuous flat roofs, which shall be not more than thirty feet (30') to the top of any parapet wall. However, where residential building heights exceed thirty feet (30'), the highest space that can be occupied must have an emergency escape and rescue opening at a maximum elevation of thirty two feet (32') above grade.

2. Institutional And Other Nonresidential Uses: Not more than forty five feet (45').

F. Ground Floor Area Per Dwelling:

1. One story: Not less than one thousand three hundred (1,300) square feet.

2. Bilevel: Not less than one thousand one hundred (1,100) square feet (floors at grade and above basement).

3. Dwellings having more than one story: Not less than nine hundred (900) square feet.

G. Yards: Except as required in subsections 13-6A-1B and D of this chapter under "accessory uses and structures", yards shall be provided as follows:

1. Front: Not less than thirty feet (30') in depth.

2. Side: Not less than ten feet (10') in depth except:

a. A side yard may be reduced to not less than eight feet (8') provided the adjoining lot contains a dwelling with an attached garage or carport adjacent to such side yard unless a side load garage is present;

b. A side yard abutting a street shall be not less than thirty feet (30') in depth;

c. To accommodate a side load garage, the minimum side yard setback (on 1 side yard) must be at least twenty three feet (23'); the width of the pavement opposite of the garage door must be a minimum of twenty three feet (23');

d. For nonresidential uses each side yard abutting a street shall be not less than thirty feet (30') in depth and each interior side yard shall be not less than thirty feet (30') in depth and increased by not less than two feet (2') for each one foot (1') of structure height over thirty feet (30').

DRAFT

3. Rear: Not less than thirty feet (30') in depth. (Ord. G-60, 3-22-1966; Ord. G-66, 12-19-1966; Ord. G-83, 4-9-1968; Ord. G-203, 12-14-1976; Ord. G-608, 3-10-1998; Ord. G-730, 9-23-2003; Ord. G-977, 8-14-2012)

13-6D-4: ADDITIONAL REGULATIONS:

A. Off Street Parking And Loading: Off street parking and loading shall be as provided in chapter 12 of this title. (Ord. G-60, 3-22-1966)

DRAFT

R4 SINGLE-FAMILY DETACHED RESIDENCE DISTRICT		
Standard For:	**Residential Use**	**Non-Residential Use**
Minimum Lot Area	18,000 sq. ft.	18,000 sq. ft.
Minimum Lot Width	75'	75'
Maximum Structure Height [4]	35' or 30' [1]	45'
Maximum Lot Coverage (Principal Structures)	0.20	0.20
Maximum FAR	0.4	0.4
Minimum Yard Setbacks		
Front Yard	30'	30'
Interior Side Yard	10' or 23' [2]	30' [3]
Street Side Yard	30'	30'
Rear Yard	30'	30'
Minimum Ground Floor Area per Dwelling		
Single Story	1,300 sq. ft.	-
Bilevel	1,100 sq. ft.	-
Two or more stories	900 sq. ft.	-

[1] For continuous flat roofs.

[2] Minimum interior yard setback to accommodate side load garage. Setback is measured from the farthest projection of the building, not the building foundation. The width of the pavement in front of the garage door must be a minimum of twenty-three feet (23').

[3] Increased 2' for each 1' of structure height over 30'

[4] Where residential building heights exceed thirty feet (30'), the highest space that meets the criteria of Sections R304, R305 & R311.4 for habitable space shall have an emergency escape and rescue opening in compliance with Section R310 at a maximum elevation of thirty two feet (32') above grade. This section shall be applied regardless of the usage designation on the construction documents, including "storage" or "bonus" rooms.

ARTICLE E. R5 RESIDENCE DISTRICT

SECTION:

13-6E-1: Permitted Uses

13-6E-2: Special Uses

13-6E-3: Lot Area Requirements

13-6E-4: Additional Regulations

13-6E-1: PERMITTED USES:

Accessory uses and structures including those uses and structures customarily accessory to residential dwellings.

Duplexes.

Home occupations.

Nameplates and signs.

Parks and playgrounds.

Public schools, parochial school, nonboarding elementary, junior high and high, on lots not less than eight (8) acres in area for an elementary school and not less than twenty five (25) acres in area for a high school. (Ord. G-903, 11-10-2009)

13-6E-2: SPECIAL USES:

Cemeteries (subject to compliance with the regulations in chapter 16 of this title): Any existing cemetery and structure shall be deemed to have a special use permit as required by this section, notwithstanding whether these existing cemeteries and structures comply, as of January 22, 2013, with the provisions of chapter 16 of this title. Any expansion, change, or new construction relating to an existing cemetery and structure shall comply with chapter 16 of this title, but any such activity shall not require a new or amended special use permit, or other zoning relief, provided that the activities comply with chapter 16 of this title. Notwithstanding the foregoing, no special use permit granted pursuant to this section, whether for an existing cemetery and structure or for a new cemetery or structure, shall permit a community burial structure to be built in a residence district.

Churches, chapels, temples and synagogues: On lots not less than three hundred feet (300') in width and not less than two (2) acres in area and one additional acre for each two hundred forty (240) seats in the sanctuary over two hundred forty (240) seats. Where churches and parochial schools are on the same land, not less than eight (8) acres in area.

DRAFT

Cultural and recreational facilities: Outdoor and indoor cultural and recreational facilities including, but not limited to, swimming pools, tennis courts, meeting facilities and other similar facilities accessory to and owned in common by the owners of properties within a residential development.

Multi-family age-restricted dwellings, provided that the following conditions, in addition to those set forth in Zoning Ordinance Section 13-14-9, are met:

A. The petitioner must provide the Village with an analysis of the proposed development's anticipated impact on emergency services, including, without limitation, the anticipated cost of providing those services. In accordance with Section 1-14-1(B), all costs incurred by the Village reviewing the petitioner's analysis, including the costs of professional consultants, shall be borne by the petitioner;

B. The petitioner must provide the Village with a plan addressing how emergency service calls will be handled, including, without limitation, how the petitioner will assist the Village in handling the provision and/or cost of emergency services that are specifically and uniquely attributable to the proposed development, so as to protect the public health, safety, and welfare; and

C. The petitioner must provide the Village with a market study addressing the demand for the proposed development. The market study must take into account the local and county demand for the proposed development.

Public utility, transportation, and government facilities: Public utility, transportation, and governmental service facilities, including municipal offices and civic centers, public libraries, police and fire stations, public works facilities, conference of municipal governments and ancillary uses (including organizations which provide consultation solely to units of local government), and similar uses.

Recreational and cultural uses.

Residential townhomes and condominiums.

Senior housing including nursing homes, independent living, assisted living and congregate care facilities. (Ord. G-903, 11-10-2009; Ord. G-989, 1-22-2013; Ord. S-1559, 2-12-2019)

13-6E-3: LOT AREA REQUIREMENTS:

A. District Area: Not less than four (4) acres.

B. Density:

1. Duplexes: Gross density shall not exceed six (6) dwelling units per acre.

2. Residential townhomes and condominiums: Gross density shall not exceed eight (8) dwelling units per acre. Additional density bonuses shall be permitted for the inclusion of the following site amenities:

a. Underground parking (for all required parking spaces): Four (4) units per acre.

b. Open space in excess of thirty percent (30%) of the project area: Two (2) units per acre.

3. Senior housing including nursing homes, independent living, assisted living and congregate care facilities: Fifteen (15) units per acre.

a. Underground parking (for all required parking spaces): Four (4) units per acre.

b. Open space in excess of thirty percent (30%) of the project area: Two (2) units per acre.

C. Floor Area Ratio: Not to exceed 0.5 for nonresidential uses.

D. Maximum Lot Area Coverage (Principal Structures): Not to exceed .35 for residential use.

E. Structure Height:

1. Duplexes: Not more than thirty five feet (35') except for continuous flat roofs, which shall be not more than thirty feet (30') to the top of any parapet wall. However, where residential building heights exceed thirty feet (30'), the highest space that can be occupied must have an emergency escape and rescue opening at a maximum elevation of thirty two feet (32') above grade.

2. All other uses: Fifty feet (50').

F. Yards:

1. Front: Not less than forty feet (40') in depth.

2. Side: Not less than twenty feet (20') in depth except:

a. A side yard abutting a street shall be not less than forty feet (40') in depth;

b. To accommodate a side load garage, the minimum side yard setback (on 1 side yard) must be at least twenty three feet (23'); the width of the pavement opposite of the garage door must be a minimum of twenty three feet (23');

c. For nonresidential uses each side yard abutting a street shall be not less than thirty feet (30') in depth and each interior side yard shall be not less than thirty feet (30') in depth and increased by not less than two feet (2') for each one foot (1') of structure height over thirty feet (30').

3. Rear: Not less than forty feet (40') in depth. (Ord. G-903, 11-10-2009; Ord. G-977, 8-14-2012)

13-6E-4: ADDITIONAL REGULATIONS:

DRAFT

A. Off Street Parking And Loading: Off street parking and loading shall be as provided in chapter 12 of this title with the following exceptions:

1. Off street parking for senior housing including nursing homes, independent living, assisted living and congregate care facilities shall be at a ratio not less than one parking space per dwelling unit. This parking ratio may be decreased upon the submittal of detailed parking study and review/approval by the village engineer. (Ord. G-903, 11-10-2009)

DRAFT

R5 RESIDENCE DISTRICT

Standard For:	Residential Use	Non-Residential Use
Minimum Lot Area	4 acres	4 acres
Maximum Structure Height [4]	35' or 30' [1]	50'
Maximum FAR	1.0	0.5
Maximum Impervious Coverage	0.35	0.35
Maximum Lot Coverage (Principal Structures)	0.20	0.30
Minimum Yard Setbacks		
Front Yard	40'	40'
Interior Side Yard	20' or 23' [2]	30' [3]
Street Side Yard	40'	30'
Rear Yard	40'	40'

[1] For continuous flat roofs.

[2] Minimum interior yard setback to accommodate side load garage. Setback is measured from the farthest projection of the building, not the building foundation. The width of the pavement in front of the garage door must be a minimum of twenty-three feet (23').

[3] Increased 2' for each 1' of structure height over 30'

[4] Where residential building heights exceed thirty feet (30'), the highest space that meets the criteria of Sections R304, R305 & R311.4 for habitable space shall have an emergency escape and rescue opening in compliance with Section R310 at a maximum elevation of thirty two feet (32') above grade. This section shall be applied regardless of the usage designation on the construction documents, including "storage" or "bonus" rooms.

CHAPTER 7
BUSINESS DISTRICTS

SECTION:

13-7-1: Purpose

13-7-2: Establishment of Commercial Districts:

13-7-~~2~~3: Two Or More Uses On A Lot

13-7-4: Location or Retail Sales On-Premise:

13-7-5: Outdoor Sales and Uses:

~~13-7-3: Scope~~

~~13-7-4: Performance Standards~~

13-7-~~5~~6: Truck Parking

13-7-7: Outdoor Dining Areas

13-7-1: PURPOSE:

The business districts provide for groupings of business and other nonresidential establishments in accordance with their compatibility, functions and scope of service. The regulations of the various business districts are designed to govern developments ranging from the local shopping areas serving primarily residents of the village to those which serve the region. (Ord. G-60, 3-22-1966; Ord. G-514, 7-13-1993)

13-7-2: ESTABLISHMENT OF COMMERCIAL DISTRICTS:

B1 Local Shopping Center District – This district focuses on supplying the nearby residential uses with small to medium scale retail and service uses. This includes retail stores, personal services, and restaurants which are typically adjacent to residential neighborhoods.

B2 Regional Shopping Center District – This district focuses on providing a large range of retail sales opportunities to the regional population. This includes "big box" and specialty stores located at a central location which is accessed by automobile.

B3 General Business District – This district focuses on general retail and is typically located along major commercial corridors and not necessarily adjacent to residential uses. This district will see larger corporate stores and is more tailored to the automobile for transportation.

B4 Hotel-Office District – This district focuses on large scale hotel and office use developments as well as supportive uses. This district is intended to provide hotel guests

and office users a variety of commercial uses and services nearby without the use of an automobile.

REGULATIONS APPLICABLE TO ALL BUSINESS DISTRICTS

13-7-~~2~~3: TWO OR MORE USES ON A LOT:

Wherever two (2) or more permitted uses or special uses, each requiring a minimum lot area, are located in the same building or on the same lot, the required minimum lot area shall be the sum of the areas required for each use individually. When one or more uses has a required minimum lot area, the total lot area shall equal the sum of the required lot areas plus an additional area equivalent to that devoted to the use which does not have a required minimum lot area. (Ord. G-60, 3-22-1966; Ord. G- 514, 7-13-1993)

~~13-7-3: SCOPE:~~

13-7-~~3~~4: LOCATION OF RETAIL SALES ON-PREMISE:

A. All business establishments shall be retail trade or service establishments dealing directly with consumers and all goods produced on the premises shall be sold on the premises where produced, except for approved specialty retail programs in outdoor areas of a shopping center in districts where permitted as a special use.

13-7-5: OUTDOOR SALES AND USES

~~B~~A. All business, service, storage, merchandise, display and where permitted, repair and processing shall be conducted wholly within a completely enclosed building except for:

1. Off street automobile parking, off street loading, and open sales lots and drive-in facilities in districts where they are permitted;

2. Outdoor dining areas adjacent to restaurants in districts where outdoor dining areas are ~~a~~ permitted ~~use;~~ and approved by the Development Services department;

3. Approved specialty retail programs in outdoor areas of a shopping center in districts where permitted as ~~a special use;~~ approved by the Development Services department;

4. Outdoor sales events on a property in any business district provided that all of the following conditions are met:

a. Any such use shall require the specific prior approval of the Development Services department on the basis of the adequacy of the lot size, parking provisions, and traffic access and the absence of undue adverse impact on other properties. Such event shall be of a limited duration (14 days or less per event) occurring no more than two (2) times in any calendar year; and

~~b. Such event is held in a temporary enclosure that received all required permits from the village; and~~

~~c~~b. Such event offers for sale only items that are normally sold inside the building in conformity with the principal use of the subject property; and

~~d~~c. Such event conforms to all signage and setback requirements of the underlying zoning district; and

~~e~~d. The property complies with all parking requirements of the underlying district, or, in the alternative, the petitioner reasonably demonstrates that notwithstanding any temporary noncompliance, the conduct of the event will not impose any undue traffic or parking burden on surrounding properties and streets; and

~~f~~e. Such event is approved by the ~~village board of trustees~~ Development Services department upon petition or request from the property owner detailing prospective compliance with the conditions herein~~; and~~.

~~5. Farmers' markets and/or French markets involving the sale of flowers, culinary accessories and edible items for consumption off the premises where the sale is made in districts where permitted as a special use.~~

5. Mobile Food Vendors/ Food Trucks are prohibited in the Village of Oak brook with the exception of special events as defined under, Chapter 12, Section 4-12-2.

B. ~~Goods sold shall consist primarily of new merchandise, except for antique shops. (Ord. G-60, 3-22-1966; Ord. G-572, 6-11-1996; Ord. G-721, 6-10-2003; Ord. G-870, 9-9-2008; Ord. G-915, 1-12-2010; Ord. G-1163, 4-28-2020)~~ The Following outdoor sales uses are prohibited:

1. Vending machines, including but not limited to the dispensing of food, rental movies or other multi-media, beverages, and other goods for retail sale.

C. Outdoor Storage

For all Commercial Districts, the following regulations apply to outdoor sales and uses:

1. No outdoor storage area shall be located between any principal structure and either its front or corner side lot line, except as specifically approved of by the Village Board during site plan review or planned development approval process after consideration by the Planning and Zoning Commission; and

2. All outdoor storage shall be enclosed by a screening fence, wall or densely planted evergreen hedge of a height sufficient to screen such containers or storage areas from view from adjoining properties and public or private streets.

~~13-7-4: PERFORMANCE STANDARDS:~~

~~All activities involving the production, processing, cleaning, servicing, testing, or repair of materials, goods or products, shall conform with the performance standards established for the ORA office-research-assembly districts 1 . (Ord. G-60, 3-22-1966)~~

~~Notes~~

~~1 1. See section 13-10-3 of this title.~~

13-7-~~5~~6: TRUCK PARKING:

Trucks in excess of one and one-half (11/2) tons' capacity used in conjunction with the operations of any use permitted in business districts shall not be parked in the open within one hundred fifty feet (150') of a residence district boundary line, except during normal business hours. (Ord. G-60, 3-22-1966)

13-7-~~6~~7: OUTDOOR DINING AREAS:

A. For the purposes of this section, "outdoor dining areas" are defined as the use of an adjacent, outside area by a restaurant for the same eating and drinking activities that occur within the restaurant.

B. The following regulations shall apply to outdoor dining areas:

1. The location of any outdoor dining area comply with all setback requirements in the applicable zoning district and shall not obstruct pedestrian or vehicular traffic. A minimum of five feet (5') of sidewalk clearance shall be maintained at all times for pedestrian travel;

2. Any outdoor dining area be under the direct supervision and control of the principal restaurant, and such dining area be enclosed by a fence or other protective safety barrier which shall be constructed to clearly delineate the boundaries of the area and to protect the health and safety of restaurant patrons and the general public;

3. The hours of operation of any outdoor dining area be within the normal operating hours of the principal restaurant;

4. There shall be no live entertainment in the outdoor dining area;

5. Plans shall be provided delineating the location of the outdoor dining area, and such location be approved by the Building Official as part of a building permit. The outdoor dining area shall be maintained in compliance with the approved plans;

6. The principal restaurant and outdoor dining area shall be in compliance with all the requirements of this code and all other applicable rules and regulations of any other governing agency including the DuPage County Health Department regarding restaurant and outdoor dining areas. (Ord. G-1163, 4-28-2020)

DRAFT

ARTICLE A. B1 LOCAL SHOPPING CENTER DISTRICT

SECTION:

13-7A-1: Permitted Uses

13-7A-2: Special Uses

13-7A-3: Lot Area Requirements

13-7A-4: Additional Regulations

13-7A-1: PERMITTED USES:

Accessory uses and structures, including, but not limited to, off street loading, off street parking and business signs.

Antique shops.

Audio and video equipment, retail sales thereof, including components and related accessories, installation and servicing of such products in motor vehicles and conducted entirely within an enclosed structure with service entry at the rear of the building with no overnight parking.

Bakeries, where not more than thirty percent (30%) of the floor area is devoted to processing.

Banks and financial institutions.

Barbershops and beauty parlors.

Book and stationery stores.

Camera and photographic supply stores and photographic studios.

Candy and ice cream stores.

Clinics, medical and dental, including accessory laboratories.

Drugstores.

Dry cleaning and laundry retail establishments; provided that processing, if done on the premises, shall utilize nonexplosive and noninflammable materials, and that such processing shall be limited to service of the principal use.

Fire stations.

Florist shops.

Food stores including grocery stores, meat markets and delicatessens.

Gift shops.

Haberdasheries.

DRAFT

Hardware stores.

Health clubs.

Hobby, toy and game shops provided amusement arcades are not permitted.

Home decorating stores.

Home furniture and furnishings stores.

Housewares stores.

Jewelry stores, including watch, clock and jewelry repair.

Launderettes, including automatic self-service dry cleaning equipment.

Libraries, branch.

Liquor stores with a minimum of ten thousand (10,000) square feet of retail space.

Luggage and leather goods stores.

Men's and women's accessory and specialty stores.

Music stores.

Offices: business, professional and public.

Optical goods stores.

Police stations.

Post offices.

Restaurants, including cocktail lounges and outdoor dining areas (as described in section 13-7-6 of this Code).

Schools: Commercial, business, trade, music and dance subject to the conditions that the permitted use is limited to second floor space of any building where a school is located and that the use is limited to a maximum of ten percent (10%) of the total square footage of the shopping center in which it is located provided that adequate parking is provided to accommodate such use.

Shoe stores.

Sporting goods stores.

Temporary buildings, for construction purposes for a period not to exceed ninety (90) days following completion of the development.

Travel bureaus and transportation ticket offices.

Variety stores.

DRAFT

Wearing apparel shops. (Ord. G-60, 3-22-1966; Ord. G-444, 2-13-1990; Ord. G-778, 4-26-2005; Ord. G-835, 9-25-2007; Ord. G-901, 10-13-2009; Ord. G-1023, 5-13-2014; Ord. G-1163, 4-28-2020)

13-7A-2: SPECIAL USES:

Accessory uses and structures, including, but not limited to, off street parking and off street loading spaces and business signs.

Automobile service stations, on lots not less than twenty thousand (20,000) square feet.

Clubs, lodges, fraternities and community centers on lots not less than twenty thousand (20,000) square feet.

Daycare center, provided such facility complies with all licensing requirements of the state and maintains a direct alarm hookup to the police department.

Drive-in banking facilities.

Farmers' markets and/or French markets involving the sale of flowers, culinary accessories and edible items for consumption off the premises where the sale is made provided that the following conditions are met:

A. Sale of used or preowned items is not permitted.

B. Farmers' market and/or French market may be conducted no more than one day per week on any property zoned for business purposes.

C. All signage and setback requirements of the underlying zoning district must be met.

D. The property on which the farmers' market and/or French market is conducted complies with all the parking requirements of the underlying zoning district or, in the alternative, the petitioner demonstrates that notwithstanding any temporary noncompliance, the conduct of the event will not impose any undue traffic or parking burden on surrounding properties and streets; and

E. The farmers' market and/or French market is approved by the Development Services department ~~of community development~~ upon application and submittal of all required information from the property owner detailing prospective compliance with the conditions herein.

Multi-family age-restricted dwellings, provided that the following conditions, in addition to those set forth in Zoning Ordinance Section 13-14-9, are met:

A. The petitioner must provide the Village with an analysis of the proposed development's anticipated impact on emergency services, including, without limitation, the anticipated cost of providing those services. In accordance with Section 1-14-1(B), all costs incurred by the Village reviewing the petitioner's analysis, including the costs of professional consultants, shall be borne by the petitioner;

B. The petitioner must provide the Village with a plan addressing how emergency service calls will be handled, including, without limitation, how the petitioner will assist the Village in handling the provision and/or cost of emergency services that are specifically and uniquely attributable to the proposed development, so as to protect the public health, safety, and welfare; and

C. The petitioner must provide the Village with a market study addressing the demand for the proposed development. The market study must take into account the local and county demand for the proposed development.

Office supply stores.

Public utility, governmental service and transportation uses:

Bus turnarounds and passenger shelters.

Electric distribution centers and substations.

Gas regulator stations.

Outdoor ATM (automated teller machine) walk-up or drive-thru

Sewage and stormwater lift stations.

Showrooms

Telephone exchanges and transmission buildings and equipment, and outdoor telephone booths and pedestals.

Water filtration plants, wells, pumping stations and reservoirs.

Restaurants and accessory cocktail lounges, without facilities for dancing and live entertainment, on lots not less than two hundred feet (200') in width and not less than one and one-half (11/2) acres in area.

Senior housing and nursing homes on lots not less than three hundred feet (300') in width and not less than two (2) acres in area. (Ord. G-60, 3-22-1966; Ord. G-454, 10-9-1990; Ord. G-513, 6-22-1993; Ord. G-556, 7-11-1995; Ord. G-835, 9-25-2007; Ord. G-903, 11-10-2009; Ord. G-915, 1-12-2010; Ord. S-1559, 2-12-2019; Ord. G-1163, 4-28-2020)

13-7A-3: LOT AREA REQUIREMENTS:

A. Floor Area Ratio: Not to exceed 0.5.

B. Structure Height: Not more than fifty feet (50') and not more than two (2) stories.

C. Yards:

1. No structure, other than access drives and paved parking areas, and signs as provided in subsection 13-7A-4A of this article, shall be erected or maintained within the following distances:

a. Sixty feet (60') from the right of way of any public street;

b. Thirty feet (30') from a district boundary which abuts a public right of way which does not afford a primary means of access to the district; and

c. Sixty feet (60') from any other district boundary; except when adjacent to a B2 district boundary line; provided, however, that the area between a building and the right of way of any street or other district boundary may be occupied by drives, drive-in banking facilities, vehicular parking, sidewalks, landscaping and similar facilities, except paved parking, areas shall not be located closer than ten feet (10') to any lot in a residence district or ten feet (10') to any public street;

except that building shall be set back not less than one hundred feet (100') from the rights of way of York Road, 22nd Street and 31st Street.

2. For the purpose of interpreting and enforcing the yard regulations of this section, the entire area included within a B1 district, except that portion separated by a dedicated public street, shall be considered as a single zoning lot; more than one building or structure may, however, be erected thereon; and the only front, side and rear yards that need to be observed are those provided for in subsection C1 of this section. (Ord. G-60, 3-22-1966; Ord. G-513, 6-22-1993; Ord. G-778, 4-26-2005)

13-7A-4: ADDITIONAL REGULATIONS:

A. Awnings, Marquees And Signs: See chapter 11 of this title.

B. Off Street Parking And Loading: Off street parking and loading shall be as provided in chapter 12 of this title. (Ord. G-60, 3-22-1966; Ord. G-85, 5-14-1968; Ord. G-513, 6-22-1993; Ord. G-695, 3-26-2002)

ARTICLE B. B2 REGIONAL SHOPPING CENTER DISTRICT

SECTION:

13-7B-1: Permitted Uses

13-7B-2: Special Uses

13-7B-3: Lot Area Requirements

13-7B-4: Additional Regulations

13-7B-1: PERMITTED USES:

Accessory uses and structures, including but not limited to storage and service areas within the structures, garages for delivery trucks, central heating and air conditioning plants, and storage areas, yards, shops and similar facilities that are used solely for operating, servicing or maintaining the activities and improvements within the district.

DRAFT

Art galleries.

Automobile service stations and automobile sales, including show rooms, electric powering stations, fulfillment centers.

Banks and other financial institutions.

Barbershops, beauty parlors, and other aesthetic and personal wellness services, including but not limited to salons and spas.

Bus depots, cab stands, and pick-up/drop-off areas for ride- sharing services.

Candy, ice cream and bakery shops, and other shops selling food products, including but not limited to grocery stores, specialty food stores, butchers, delicatessens, health food stores, with or without accessory catering services, where the commodities may be produced on the premises; but all such production shall be either sold at retail on the premises or sold in stores owned and operated by the producing company.

Drugstores, pharmacies, and stores selling medical devices and homeopathic or herbal remedies (but not including medical cannabis dispensaries).

Data Center-Electronic data storage.

Furniture stores, including upholstery when conducted as part of the retail operation and secondary to the principal use.

Gas regulator stations.

Hospitals, having not more than ten (10) beds and first-aid stations for the treatment of emergency cases, and outpatient medical and aesthetic service facilities and uses, including but not limited to medical and dental offices and clinics, rehabilitative exercise and training centers, cosmetic surgery services, physical therapy, massage, and chiropractic services.

Hotels.

Hybrid uses. While commercial occupants in the B2 District may operate a single principal use with one or more accessory uses, other commercial occupants may have business operations that are or become a hybrid of multiple principal uses of significant and possibly equal importance. Hybrid use shall not include showrooms. The following are provided by way of example and not limitation:

A. Restaurants, cocktail lounges and tearooms, coffee houses, banquet facilities, micro-wineries, micro-breweries, micro-distilleries and other businesses offering the sale of food and beverage may be combined with retail, catering, event planning, musical performances and karaoke, dance floors, bowling, bocce, pool and billiards, ping pong and similar table games, arcade games, outdoor dining areas (as described in section 13-7-6) and other forms of service, entertainment and recreation.

B. Retail stores and shops, including department stores, may operate and offer related and complementary on-site uses and services (including but not limited to repair services, internet purchase fulfillment services, restaurant and food service, classes, indoor special events and

entertainment) and off-site services (including but not limited to event planning, catering and interior design).

C. Gyms, health clubs and other physical wellness facilities may be paired with restaurant and retail uses and offer nutritional and health classes, personal training and counseling, aesthetic services, and chiropractic, physical therapy, massage, medical services, including blood draws.

Interior decorating shops.

Job printing shops.

Laundries, dyeing and cleaning establishments, operated as an accessory use to some other use or uses permitted by this section, provided permits for the use of combustible and flammable materials, if to be used, are obtained from the Board of Trustees.

Laundries, self-service, and shops for the collection and distribution of laundry and dry cleaning articles.

Messenger and telephone service stations.

Offices.

Pet shops, grooming services, and veterinary clinics.

Photographer, artist or similar studios.

Post offices.

Printing plants, newspaper, magazine and similar publications.

Public and private garages.

Radio and television broadcasting stations.

Restaurants, cocktail lounges and tearooms, coffee houses, banquet facilities, micro-wineries, micro-breweries, outdoor dining areas (as described in section 13-7-6), and other businesses offering the sale of food and beverage (but not including micro-distilleries). Vertical and rooftop gardens that produce fruits, flowers and vegetables for on premises consumption and use.

Retail stores and shops, including department stores.

~~Sales and display rooms.~~

Schools, studios, classrooms, facilities and activities for personal or interactive learning, physical wellness and cultural enrichment, including but not limited to colleges, universities and test preparation services, art and craft classes, yoga and Pilates studios, gyms and physical fitness facilities, after- school programs for children, day camps, venues providing interactive entertainment and educational programming for children, and activity centers for seniors and adult learning. Structures for physical wellness uses are permitted to include, by way of example and not limitation, indoor and outdoor exercise and participant sports facilities, swimming pools, playgrounds, and climbing walls.

DRAFT

Service, cleaning and repair shops, for personal, household or garden equipment.

Tailor or dressmaking shops, and similar repair services.

Theaters, except open air drive-in establishments. (Ord. G-1112, 9-26-2017; Ord. G-1163, 4-28-2020)

13-7B-2: SPECIAL USES:

Amusement establishments that are not expressly listed as a permitted use under section 13-7B-1 of this article, such as spectator sports facilities, and are not otherwise prohibited by Village ordinance.

Automobile test drive areas that are designated exclusively as such and involve construction of specific physical improvements (as opposed to automobile testing within multi-functional vehicular areas).

Community centers that do not qualify as a permitted use under section 13-7B-1 of this article.

Daycare center, provided such facility complies with all licensing requirements of the State and maintains a direct alarm hookup to the Police Department.

Drive-in banking facility.

Electric distribution centers and substations.

Farmers' markets and/or French markets involving the sale of flowers, culinary accessories and edible items provided that the following conditions are met:

A. Sale of used or pre-owned items is not permitted unless allowed in the special use approval ordinance.

B. Farmers' market and/or French market may be conducted no more than one day per week unless otherwise allowed in the special use approval ordinance.

C. All signage and setback requirements of the underlying zoning district must be met.

D. The property on which the farmers' market and/or French market is conducted complies with all the parking requirements of the underlying zoning district or, in the alternative, the petitioner demonstrates that notwithstanding any temporary noncompliance, the conduct of the event will not impose any undue traffic or parking burden on surrounding properties and streets; and

E. The farmers' market and/or French market is approved by the ~~Department of Community~~ Development Services department upon application and submittal of all required information from the property owner detailing prospective compliance with the conditions herein.

Micro-distilleries.

Specialty retail programs that do not qualify as a permitted use under section 13-7B-1 of this article.

Pre-schools, including nursery schools and kindergartens.

Public utility, governmental service, and transportation uses:

Bus turnarounds and passenger shelters.

Fire and police stations.

Outdoor ATM (automated teller machine) walk-up or drive-thru

Sewage and stormwater lift stations.

Showrooms

Telephone exchanges and transmission buildings and equipment, and outdoor telephone booths and pedestals.

Water filtration plants, wells, pumping stations and reservoirs.

Specialty retail programs in outdoor areas of a shopping center as a convenience to pedestrian shoppers, provided: a) all aspects of the operation and sales meet the applicable requirements of the DuPage County Health Department; and b) specialty retail program facilities have appropriate utilities provided, are not convenient to drive-up businesses, and do not materially interfere with access to or visibility of other establishments within the shopping center.

Wireless communication towers. (Ord. G-1112, 9-26-2017; Ord. G-1163, 4-28-2020)

13-7B-3: LOT AREA REQUIREMENTS:

A. Floor Area Ratio: Not to exceed 0.5; provided, however, that with regard to any increase of floor area over 0.3, not more than twelve and one-half percent (121/2%) of permissible floor area in excess of 0.3 shall be devoted to office use as permitted under section 13-7B-1 of this article.

B. Yards:

1. No structure, other than signs as provided for in subsection 13-7B-4A of this article shall be erected or maintained within the following distances:

a. Three hundred feet (300') from the right-of-way of 22nd Street or Route 83 (Kingery Expressway);

b. Eighty feet (80') from the right-of-way of any other street;

c. Eighty feet (80') from any other district boundary, except when adjacent to a B1 District, and except that when adjacent to a residence district boundary line, then not within one hundred fifty feet (150') of such boundary line; provided, however, that the area between a building and the right-of-way of any street or other district boundary may be occupied by

drives, drive-in banking facilities, vehicular parking, sidewalks, landscaping and similar facilities, except that paved areas shall not be located closer than forty feet (40') to any lot in a residence district.

2. For the purpose of interpreting and enforcing the yard regulations of this subsection, the entire area included within a B2 District, except that portion separated by a dedicated public street, shall be considered as a single zoning lot; more than one building or structure may, however, be erected thereon; and the only front, side and rear yards that need to be observed are those provided for in subsection B1 of this section. (Ord. G-60, 3-22-1966; Ord. G-229, 4-25-1978; Ord. G-414, 7-12-1988; Ord. G-513, 6-22-1993)

13-7B-4: ADDITIONAL REGULATIONS:

A. Signs: See chapter 11 of this title.

B. Off Street Parking And Loading: Off street parking and loading shall be as provided in chapter 12 of this title. (Ord. G-60, 3-22-1966; Ord. G-85, 5-14-1968; Ord. G-695, 3-26-2002)

ARTICLE C. B3 GENERAL BUSINESS DISTRICT

SECTION:

13-7C-1: Permitted Uses

13-7C-2: Special Uses

13-7C-3: Lot Area Requirements

13-7C-4: Additional Regulations

13-7C-1: PERMITTED USES:

Accessory uses and structures.

Animal hospitals and veterinarian offices.

Art galleries.

Auction rooms.

Automobile accessory stores.

Automobile sales establishments.

Automobile service stations.

Banks and other financial institutions.

Bicycle stores, sales, rental and repair.

DRAFT

Blueprinting and photocopying establishments.

Building material sales, not including outside storage.

Camera and photographic supply stores.

Carpet and rug stores.

Cartage and express facilities; provided storage of goods, motor trucks or other equipment is in a completely enclosed building.

Catering establishments.

China and glassware stores.

Clinics, medical and dental, including accessory laboratories.

Clothes pressing establishments.

Clothing stores.

Clothing and costume rental shops.

Clubs, lodges and fraternal organizations.

Cocktail lounges.

Coin and philatelic stores.

Department stores.

Drug stores.

Dry cleaning and laundry retail establishments; provided, that processing, if done on the premises, shall utilize nonexplosive, nonflammable materials, that such processing shall be limited to service of the principal use.

Electrical, gas and other household appliance stores, including radio and television sales and accessory repair and service thereof.

Electric distribution centers and substations.

Employment agencies.

~~Exhibition halls.~~

Fire stations.

Food stores, including grocery stores, meat markets and delicatessens.

Furniture stores, including upholstery when conducted as part of the retail operation and secondary to the principal use.

Furrier shops, including the incidental storage and conditioning of furs.

DRAFT

Garages, public, where body repair and painting are incidental accessory uses, but not including automobile wrecking yards.

~~Garages, storage.~~

Garden supply and seed stores.

Gas regulator stations.

Greenhouses and conservatories.

Hobby shops, for retailing of items to be assembled or used away from the premises.

Interior decorating shops, including upholstery and making of draperies, slipcovers and other similar articles when conducted as part of the retail operation and secondary to the principal use.

Jewelry stores, including watch repair.

Job printing shops, using presses having beds of not more than fourteen inches by twenty inches (14" x 20").

Kennels, with no outdoor dog runs.

Laboratories, medical, dental or optical.

Leather goods and luggage stores.

Libraries.

Liquor stores, retail sales of package goods only.

Loan offices.

Locksmith shops.

~~Mail order service stores.~~

Millinery shops.

Music stores, sheet music and phonograph record sales.

Musical instrument sales and repair.

Offices.

Office supply stores.

Opticians and optometrists.

Orthopedic and medical appliance stores, not including the assembly or manufacture of such articles.

Paint and wallpaper stores.

Parking lots, for passenger motor vehicles only.

DRAFT

Pet service, domestic.

Pet shops.

Photography studios, including developing and printing of photographs, when conducted on the premises as a part of the retail business.

Physical culture and health service, gymnasiums, reducing salons, massage salons and public baths.

Picture framing, when conducted on the premises for retail trade.

Plumbing, heating, air conditioning and electrical fixtures and equipment, showroom and shops, for domestic use only.

Police stations.

Radio and television service and repair shops.

Recording studios.

Recreational buildings, community centers and meeting halls.

Religious institutions, churches, chapels, temples or synagogues.

Restaurants, including musical entertainment and dancing and outdoor dining areas (as described in section 13-7-6).

Schools, commercial or trade, provided that operations do not involve danger of fire, explosion, nor objectionable standards of noise, vibration, smoke, dust, odor, glare, heat or other nuisances.

Sewing machine sales and services, household machines only.

Shoe and hat repair stores.

Shoe stores.

Sporting goods stores.

Tailor shops.

Taxidermists.

Telegraph offices.

Theaters, indoor.

Tobacco shops.

Toy shops.

Travel bureaus and transportation ticket offices.

Typewriter and adding machine sales and service establishments.

DRAFT

Undertaking establishments and funeral parlors. (Ord. G-60, 3-22-1966; Ord. G-520, 8-24-1993; Ord. G-1163, 4-28-2020)

13-7C-2: SPECIAL USES:

Accessory uses and structures, including, but not limited to, off street parking and off street loading spaces and business signs.

Amusement establishments, including bowling alleys, gymnasiums, swimming pools and skating rinks.

Automobile minimarket.

Daycare center, provided such facility complies with all licensing requirements of the state of Illinois and maintains a direct alarm hookup to the Oak Brook police department.

Drive-in establishments for permitted uses.

Farmers' markets and/or French markets involving the sale of flowers, culinary accessories and edible items for consumption off the premises where the sale is made provided that the following conditions are met:

A. Sale of used or preowned items is not permitted.

B. Farmers' market and/or French market may be conducted no more than one day per week on any property zoned for business purposes.

C. All signage and setback requirements of the underlying zoning district must be met.

D. The property on which the farmers' market and/or French market is conducted complies with all the parking requirements of the underlying zoning district or, in the alternative, the petitioner demonstrates that notwithstanding any temporary noncompliance, the conduct of the event will not impose any undue traffic or parking burden on surrounding properties and streets; and

E. The farmers' market and/or French market is approved by the Development Services department ~~of community development~~ upon application and submittal of all required information from the property owner detailing prospective compliance with the conditions herein.

Horse stables and riding academies, public, on a lot not less than ten (10) acres in area, provided buildings containing stables and accessory outdoor facilities are not less than one hundred fifty feet (150') from the nearest lot line.

Nursing homes, on lots not less than three hundred feet (300') in width and not less than two (2) acres in area.

Open sales lots, when accessory to new automobile, trailer or boat sales establishments.

Public utility, governmental service and transportation uses.

Bus turnarounds and passenger shelters.

Outdoor ATM (automated teller machine) walk-up or drive-thru

Sewage and stormwater lift stations.

Showrooms

Telephone exchanges and transmission buildings and equipment, and outdoor telephone booths and pedestals.

Water filtration plants, wells, pumping stations and reservoirs.

Recreation, outdoor, par 3 and miniature golf courses, golf driving ranges, swimming and tennis clubs, and other outdoor recreation uses as approved by the village board of trustees.

Senior housing.

Trailer or boat sales establishments, for new trailer or boat sales. (Ord. G-60, 3-22-1966; Ord. G-305, 9-8-1981; Ord. G-449, 8-14-1990; Ord. G-454, 10-9-1990; Ord. G-819, 12-12-2006; Ord. G-903, 11-10-2009; Ord. G-915, 1-12-2010; Ord. G-1163, 4-28-2020)

13-7C-3: LOT AREA REQUIREMENTS:

A. Floor Area Ratio: Not to exceed 1.2.

B. Structure Height: Not more than thirty-five feet (35') and not more than three (3) stories.

C. Yards: As in B1 local shopping center district, except: 1) for automobile service stations where islands containing fuel pumps and air and water outlets, with or without connecting shelters, shall have a front yard, or a side yard adjoining a street not less than twenty five feet (25') in depth; and 2) front and side yards abutting 22nd Street and York Road shall have a depth not less than one hundred feet (100'). (Ord. G-60, 3-22-1966)

13-7C-4: ADDITIONAL REGULATIONS:

A. Awnings, Marquees And Signs: See chapter 11 of this title.

B. Off Street Parking And Loading: Off street parking and loading shall be as provided in chapter 12 of this title. (Ord. G-60, 3-22-1966; Ord. G-695, 3-26-2002)

DRAFT

ARTICLE D. B4 HOTEL-OFFICE DISTRICT

SECTION:

13-7D-1: Permitted Uses

13-7D-2: Special Uses

13-7D-3: Lot Area Requirements

13-7D-4: Additional Regulations

13-7D-1: PERMITTED USES:

Accessory uses and structures including:

Restaurants and accessory cocktail lounges, and outdoor dining areas (as described in section 13-7-6) which is used principally for a permitted use, and when located on floors below those used for the principal use or on the top floor or roof of such a structure.

Retail sales and personal service uses, having no exterior advertising and accessible only from the lobby and interior of a building and used for a permitted principal use and when no single establishment occupies more than two thousand (2,000) square feet of floor area.

Electric distribution centers and substations.

Gas regulator stations.

Hotels and motels (minimum of 50 rooms).

Offices, institutional and fraternal.

Sewage and stormwater lift stations.

Telephone exchanges and transmission buildings and equipment, and outdoor telephone booths and pedestals.

Water filtration plants, wells, pumping stations and reservoirs. (Ord. G-60, 3-22-1966; Ord. G-1163, 4-28-2020)

13-7D-2: SPECIAL USES:

Accessory uses and structures.

Bus turnarounds and passenger shelters.

Daycare center, provided such facility complies with all licensing requirements of the state and maintains a direct alarm hookup to the Oak Brook police department.

DRAFT

Farmers' markets and/or French markets involving the sale of flowers, culinary accessories and edible items for consumption off the premises where the sale is made provided that the following conditions are met:

A. Sale of used or preowned items is not permitted.

B. Farmers' market and/or French market may be conducted no more than one day per week on any property zoned for business purposes.

C. All signage and setback requirements of the underlying zoning district must be met.

D. The property on which the farmers' market and/or French market is conducted complies with all the parking requirements of the underlying zoning district or, in the alternative, the petitioner demonstrates that notwithstanding any temporary noncompliance, the conduct of the event will not impose any undue traffic or parking burden on surrounding properties and streets; and

E. The farmers' market and/or French market is approved by the Development Services department ~~of community development~~ upon application and submittal of all required information from the property owner detailing prospective compliance with the conditions herein.

Offices, business and professional, occupying less than fifty percent (50%) of the total floor area of a structure over five (5) stories in height, and when located on floors below those used for dwelling purposes.

Outdoor ATM (automated teller machine) walk-up or drive-thru

Sewage and stormwater lift stations.

Showrooms

Water filtration plants, wells, pumping stations and reservoirs. (Ord. G-60, 3-22-1966; Ord. G-454, 10-9-1990; Ord. G-915, 1-12-2010)

13-7D-3: LOT AREA REQUIREMENTS:

A. Floor Area Ratio: Not to exceed 0.6.

B. Yards:

1. Front: Not less than one hundred feet (100').

2. Side Yards And Courts:

a. Two (2) side yards each not less than ten feet (10'), plus one foot (1') for each one foot (1') in height that a structure exceeds twenty seven feet (27'), in height except a side yard adjoining a street shall be not less than fifty feet (50').

b. Where a building wall more than thirty feet (30') in length faces an interior side lot line, the interior yard as required in this article shall be increased in depth by one foot (1') for

each one foot (1') such wall exceeds thirty feet (30') in length, or not more than twenty seven feet (27'), whichever is less.

c. Where the walls of one or more structures face upon a court, the depth and length of the court shall be as approved by the board of trustees after receiving recommendations of the plan commission.

3. Rear: Not less than forty feet (40') in depth.

4. Yards Adjoining Residence District: Any yard adjoining a residence district and a structure within the B4 hotel-office district shall be not less than one hundred feet (100') in depth.

5. Yards Adjoining 22nd Street And York Road: Not less than one hundred feet (100') in depth.

C. Height: Not more than five (5) stories.

D. Lot Width: Not less than two hundred feet (200'). (Ord. G-60, 3-22-1966)

13-7D-4: ADDITIONAL REGULATIONS:

A. Awnings, Marquees And Signs: See chapter 11 of this title.

B. Off Street Parking And Loading: Off street parking and loading shall be as provided in chapter 12 of this title. (Ord. G-60, 3-22-1966; Ord. G-695, 3-26-2002)

DRAFT

CHAPTER 8
HISTORIC GRAUE MILL GATEWAY AREA

SECTION:

13-8-1: Findings

13-8-2: Graue Mill Gateway Area Established

13-8-3: Intent And Purpose

13-8-4: Definitions

13-8-5: Applicability

13-8-6: Certificate Of Appropriateness

13-8-7: Gateway Development Plan

13-8-8: Additional Requirements Of Gateway Development Plan

13-8-9: Action By Governmental Bodies

13-8-10: Implementation Of Gateway Development Plan

13-8-11: Exceptions To Plan Procedures

13-8-12: Procedure For Single-Family Detached Residences

13-8-1: FINDINGS:

A. The area around the Graue Mill is a unique area with special cultural significance and character different from similarity zoned properties in the Village and includes historic structures: the Graue Mill, the old St. John Church and the Fred Graue residence, which structures are hereby designated to be historically significant.

B. The preservation and development of this area require additional rules and regulations supplementing existing ordinances in order to specifically address the unique character of that area.

C. The Historic Graue Mill Gateway Area includes all that property within the boundaries as shown on the map and legal description labelled Exhibit "A", attached to Ordinance G-272 on file in the office of the Village Clerk. Such map and legal description are hereby incorporated herein and made a part hereof by reference.

D. A public hearing has been held pursuant to notice to property owners in the area of the Historic Graue Mill Gateway Area on February 2, 1980, before the Zoning Board of Appeals of the Village, pursuant to due and appropriate notice published in the Oak Brook Doings on January 17, 1980.

E. The creation of the Historic Graue Mill Gateway Area and rules and regulations regarding the development therein is consistent with the comprehensive plan of the Village of Oak Brook.

F. The Village of Hinsdale has passed on October 7, 1980, a similar ordinance so that the character of this area can be preserved in both Villages. This joint effort of the two (2) Villages is consistent with and in accordance with the provisions of section 10 of article VII of the Illinois Constitution relating to intergovernmental cooperation. (Ord. G-272, 11-11-1980)

13-8-2: GRAUE MILL GATEWAY AREA ESTABLISHED:

The Historic Graue Mill Gateway Area is hereby established with the boundaries as set forth in Exhibit "A", attached to Ordinance G-272, made a part of this Chapter by reference, and on file in the office of the Village Clerk. The provisions of this Chapter shall apply to the erection, construction, alteration or repair of any building or structure in the said area and no building permits shall be issued for any such work except as provided herein. (Ord. G-272, 11-11-1980)

13-8-3: INTENT AND PURPOSE:

The provisions of this Chapter are intended to order and control growth within the area described as the Historic Graue Mill Gateway Area, hereinafter sometimes referred to as "area", and for the additional purposes:

A. To promote the public health, safety, morals, comfort and general welfare of the citizens of said area.

B. To enhance the values of property throughout the said area.

C. To encourage and foster development in the area consistent with the Graue Mill, its site and the historic period it represents.

D. To encourage and promote the attractiveness, cohesiveness and compatibility of new buildings, development, remodeling, and additions so as to maintain and improve established standards of property values within the area consistent with its historical character.

E. To encourage and promote the preservation of historical structures, buildings and natural resources including the Graue Mill, the old St. John Church and the Fred Graue residence. (Ord. G-272, 11-11-1980)

13-8-4: DEFINITIONS:

For purposes of this Chapter the following words and terms shall have the respective meanings:

ARCHITECTURAL CHARACTER: The composite or aggregate of the characteristics of structure, form, materials, and function of a building, group of buildings, or other architectural composition.

ARCHITECTURAL CONCEPT: The basic aesthetic idea of a building, or group of buildings or structures, including the site and landscape development, which produces the architectural character.

AREA: The Historic Graue Mill Gateway Area.

CERTIFICATE OF APPROPRIATENESS: A statement issued by the President and Board of Trustees of the Village that a gateway development plan meets the intent and purpose of the Historic Graue Mill Gateway Area which permits the applicant to build in accordance with the statement.

EXTERIOR BUILDING COMPONENT: An essential and visible part of the exterior of a building.

GATEWAY DEVELOPMENT PLAN: Those documents, drawings, and plans, including the site plan and landscape plan, as referred to in Sections 13-8-7 and 13-8-8 of this Chapter.

SCREENING: Structure or plantings which conceals from view from public ways the areas behind such structure or plantings.

STREET HARDWARE: Objects other than buildings, structures and plantings located in streets and public ways and outside of buildings. Examples are: lamp posts, utility poles, traffic lights, traffic signs, benches, litter containers, planting containers, letter boxes, fire hydrants.

STREETSCAPE: The scene as may be observed along a public street or way composed of natural and manmade components including buildings, paving, plantings, street hardware, and miscellaneous structures.

VILLAGE: The Village of Oak Brook, Illinois. (Ord. G-272, 11-11-1980)

13-8-5: APPLICABILITY:

The provisions of this Chapter shall be in addition to and not in derogation of any provisions of the zoning ordinance of the Village; provided, however, that where any provision of the said zoning ordinance may conflict with a provision of this Chapter, the more restrictive provisions shall apply. (Ord. G-272, 11-11-1980)

13-8-6: CERTIFICATE OF APPROPRIATENESS:

A. Required: No building permit or other permit otherwise required under the ordinances of the Village for the erection, construction, exterior alteration or repair of any building or structure in the Historic Graue Mill Gateway Area shall be issued by the Director of ~~Community~~ Development Services except upon the issuance of a certificate of appropriateness by the President and Board of Trustees. Such certificate of appropriateness

may only be issued after a public hearing has been held before the Plan Commission of the Village in accordance with the public hearing procedures set forth herein and after the President and Board of Trustees of the Village approve the gateway development plan for the property involved.

B. Application And Hearing: Upon the filing of an application for a building permit for which a certificate of appropriateness is or may be required, the applicant shall concurrently file with the Village Clerk an application for a certificate of appropriateness, which application shall include all the information and material required pursuant to Sections 13-8-7 and 13-8-8 of this Chapter. Such application shall be referred to the plan commission by the president and board of trustees upon verification of the completeness of said application. The fact that an application for a certificate of appropriateness has been filed shall not be cause for the ~~d~~Director of ~~community d~~Development Services to delay the review of plans relating to the building and zoning aspects of the project while said application is pending. The plan commission shall thereupon fix a reasonable time, within forty five (45) days, for a hearing and give a written five (5) day notice thereof to the applicant. Upon such hearing the commission shall consider the application for a certificate of appropriateness and, if necessary, receive additional evidence (such as exterior elevation renderings) from the applicant or his agent or attorney and from the village personnel or other persons as to whether the external architectural features of the proposed building or structure comply with the provisions of this chapter. All testimony given at such hearing shall be under oath. (Ord. G-272, § 1, 11-11-1980)

13-8-7: GATEWAY DEVELOPMENT PLAN:

The gateway development plan must be appropriate to the development of the area consistent with its historic character and shall provide detailed information in regards to the following:

A. Relationship Of Proposed Buildings Or Structures To Site And Adjoining Area: The site shall be planned to accomplish a desirable transition with the streetscape, and to provide for adequate planting, pedestrian movement, and parking areas, and shall be evaluated pursuant to the following criteria:

1. The provision, where practical, of setbacks in excess of zoning restrictions to provide an interesting relationship between buildings;

2. The treatment of parking areas with decorative elements, building wall extensions, plantings, berms or other innovative means so as to screen parking from view;

3. The underground installation of newly installed utility services, and service revisions necessitated by exterior alterations.

B. Building Design: Evaluation of the appearance of a project shall be based on the following criteria:

1. The quality of the design and its relationship to the Graue Mill, its site, and the historic period it represents;

2. The compatibility of the design, arrangement, texture, and materials of the proposed buildings or structures with the intent and purpose of the area;

3. The screening and location of mechanical equipment or other utility hardware on roof, ground, or buildings from public view with materials harmonious to the building, so as not to be visible from any public ways;

4. The unobtrusiveness and harmoniousness of exterior lighting and the compatibility of fixtures, standards, and all exposed accessories with the building design.

C. Street Hardware And Signs: See chapter 11 of this title.

D. Landscaping Design Considerations: Landscape treatment shall be provided to enhance architectural features and provide shade and screening, and shall be evaluated pursuant to the following criteria:

1. The compatibility of the design and size of all landscaping effects with the building or structure and adjacent areas;

2. The preservation, protection and development of existing topographic patterns and plant materials which contribute to the beauty and utility of a development;

3. Where building sites limit plantings, the placement of trees in the parkway or paved areas. Parkway trees shall be of a minimum three inch (3") caliper. Buildings of three (3) stories or more shall have parkway and front and/or side yard trees of a minimum of five inch (5") caliper;

4. The method of screening of service yards, and other places which tend to be unsightly, by fencing, plantings, or a combination of these. Screening shall be equally effective in all seasons and may be accomplished by use of any combination of walls, fencing or plantings;

5. The enhancement of parking areas and traffic ways with landscaped spaces containing trees and tree groupings and low shrubs or ground cover;

6. The use of unobstrusive exterior lighting to enhance the landscaping;

7. The use of landscaping materials and lighting which have low demand for annual maintenance.

E. Landscape Plan: A detailed landscape plan shall show:

1. Location of existing plant materials to remain and those to be removed;

2. Designation of parkway "street trees". Existing parkway trees shall be preserved and protected during construction;

3. Scientific (genus-species) and common names of proposed landscape material and proposed quantities and sizes of same;

4. Landscape materials other than plant materials shall be designated in detail.

The landscape plan shall be prepared by a landscape architect or qualified nurseryman in accordance with the criteria set forth in subsection D of this section. The plan shall be signed and dated by the designer.

F. Site Plan: A detailed site plan shall show:

1. Exact location of the building(s) or structure(s) on the site;

2. Exact location of drives, walks, parking areas, parking layout, freestanding or retaining walls, fences, and drainage accommodations;

3. Elevations showing all sides of the proposed structure. Elevations should indicate the type of materials to be used on the structure as well as their proportions;

4. Existing grades or topographic details to be retained and proposed grading;

5. Location of utilities. (Ord. G-272, 11-11-1980; Ord. G-695, 3-26-2002)

13-8-8: ADDITIONAL REQUIREMENTS OF GATEWAY DEVELOPMENT PLAN:

In addition to the information required pursuant to subsection 13-8-7F of this chapter, the following requirements must be met prior to the issuance of a certificate of appropriateness:

A. Visual Environment: In order to ensure an adequate and pleasant natural environment, a sum of money equal to not less than five percent (5%) of the total project construction cost, as set forth on the approved building permits, shall be budgeted and used by the owners and developers to purchase and install mature sized trees, shrubbery, grass and other suitable landscaping upon the grounds, which budgeted amount shall be expended to comply with the provisions of subsections 13-8-7D and E of this chapter. The president and board of trustees may vary from or waive the requirement for such expenditure where such expenditure would cause a hardship on the applicant. Hardship, for purposes of this chapter shall include, but not be limited to, the following situations:

1. Irregular shaped lots where landscaping is not practical;

2. Lots with minimal frontage;

3. Development does not cause any visual impact; e.g., development to the rear of a lot or building; and

4. Those instances where there is an abundance of existing natural vegetation precluding the necessity for further landscaping treatment.

B. Public Utilities: All utility lines, including, but not limited to, telephone and electric, in the right of way adjacent to and in the development property shall be placed underground. Underground utility lines shall be placed within easements or dedicated public ways in a manner which will not conflict with other underground services. All transformer boxes and service posts shall be located so as not to be unsightly or hazardous. (Ord. G-272, 11-11-1980)

13-8-9: ACTION BY GOVERNMENTAL BODIES:

A. Plan Commission: Prior to making its decision the commission may make recommendations to the applicant as to changes in the exterior drawings, sketches, landscaping, site plans and materials which in the judgment of the commission would tend to effect the general purposes of this chapter. The commission shall make its decision within fifteen (15) days after the hearing is closed and shall issue to the president and board of trustees its findings and recommendation concerning the proposed gateway development plan. If the plan commission recommends denial of a gateway development plan it shall specifically point out such deficiency in its findings.

B. Corporate Authorities: The village president and board of trustees may approve or disapprove the proposed gateway development plan or refer the matter back to the plan commission for further consideration. Upon approval of any proposed gateway development plan the president and board of trustees shall issue a certificate of appropriateness as to the approved gateway development plan. (Ord. G-272, 11-11-1980)

13-8-10: IMPLEMENTATION OF GATEWAY DEVELOPMENT PLAN:

Upon granting of a certificate of appropriateness, the gateway development plan, including the exterior drawings, sketches, landscape and site plans, renderings and materials upon which said certificate was granted, shall be referred to the director of community development, whose responsibility it shall be to determine, from time to time as the project is in progress and upon its completion, that there have been no unauthorized deviations from the gateway development plan upon which the granting of the certificate of appropriateness was based. (Ord. G-272, 11-11-1980)

13-8-11: EXCEPTIONS TO PLAN PROCEDURES:

The requirements of this chapter for submission and approval of a gateway development plan and the issuance of a certificate of appropriateness shall not be applicable to:

A. Renovation, restoration and preservation of structures designated by the president and board of trustees as historically or culturally significant;

B. Ordinary repairs or interior renovations;

C. Renovations or additions to existing single-family detached residential buildings or structures accessory thereto. (Ord. G-272, 11-11-1980)

13-8-12: PROCEDURE FOR SINGLE-FAMILY DETACHED RESIDENCES:

Where a certificate of appropriateness is required, pursuant to subsection 13-8-6A of this chapter, for the construction of any single-family detached residence, the requirements of subsections 13-8-7D, E and 13-8-8A of this chapter shall not be applicable. (Ord. G-272, 11-11-1980)

DRAFT

CHAPTER 10
OFFICE-RESEARCH-ASSEMBLY DISTRICTS

SECTION:

13-10-1: Prohibited Uses

13-10-2: Uses Enclosed

13-10-3: Performance Standards

13-10-4: Outdoor Dining Areas

13-10-1: PROHIBITED USES:

A. ~~Industrial:~~ No lot shall be used, and no structure shall be erected, altered or remodeled for any of the following uses: abattoirs; arsenals; crematories; creosote treatment or manufacture; fat rendering; fertilizer manufacture; fireworks manufacture or storage; dumping or reduction of garbage, dead animals, offal, or refuse; ore reduction; petroleum processing or refining; pyroxylin manufacture; gutta percha manufacture or treatment; saltworks; sauerkraut manufacture; smelters; stockyard or slaughter of or experimentation with animals or fowl; tallow, grease, or lard manufacture or treatment; tanning, curing, or storage of rawhides or skins; tar distillation or manufacture; cement, concrete, or asphaltic concrete, mortar or plaster batch mixing plants; or junkyard or other uses having operations that are deemed by the board of trustees to be incompatible with the intended environmental character of the ORA office-research-assembly district, except clinical testing of animals of the rodent family or domesticated fowl is permitted if conducted within a separate room or rooms not to exceed two thousand (2,000) square feet of gross floor area which is part of a building used for research.

B. Explosives: No activities involving the storage, utilization, or manufacture of materials or products which decompose by detonation shall be permitted, except such as are specifically licensed by the village. Such materials shall include, but shall not be confined to, all primary explosives such as lead azide, lead styphnate, fulminates and tetracene; all high explosives such as TNT, RDX, HMX, PETN and pectic acid, propellants and components thereof such as nitrocellulose, black powder, boron hydrides, hydrazine and its derivatives; pyrotechnics and fireworks such as magnesium powder, potassium chlorate and potassium nitrate; blasting explosives such as dynamite and nitroglycerin; unstable organic compounds such as acetylides, tetrazoles, perchloric acids; perchlorates, chlorates, hydrogen peroxide in concentrations greater than thirty five percent (35%); and nuclear fuels, fissionable materials and products, and reactor elements such as uranium 235 and plutonium 239. (Ord. G-60, 3-22-1966; Ord. G-119, 5-12-1970)

DRAFT

13-10-2: USES ENCLOSED:

All business, service, research, merchandise display and manufacturing activities and operations shall be conducted wholly within completely enclosed buildings except off street parking, off street loading, outdoor dining areas adjacent to restaurants and open sales lots and drive-in facilities in districts where they are permitted. (Ord. G-60, 3-22-1966; Ord. G-758, 8-24-2004)

13-10-3: PERFORMANCE STANDARDS:

Any use established in the ORA1, ORA2 or ORA3 office-research- assembly districts shall be operated so as to comply with the performance standard regulations prescribed in this section, and no use lawfully established on the effective date hereof shall be hereafter altered or modified so as to conflict with, or further conflict with, such performance standards.

A. Noise: See section 13-3-10 of this title for performance standards pertaining to sound levels.

B. Vibration: Any operation or activity which shall cause at any time and at any point beyond the boundaries of the lot, earthborne vibrations other than background vibrations produced by some source not under control of this chapter, such as the operation of motor vehicles or other transportation facilities in excess of the limits set forth in the following column I is prohibited. In addition, any operation or activity which shall cause at any time and at any point in a residence district earthborne vibrations in excess of the limits set forth in the following column II is prohibited. Vibration shall be expressed as displacement in inches and shall be measured with a three (3) component measuring system approved by the ~~d~~Director of ~~community d~~Development Services.

Frequency In Cycles Per Second	I Displacement In Inches	II Displacement In Inches
0 to 10	0.0008	0.0004
10 to 20	0.0005	0.0002
20 to 30	0.0002	0.0001
30 to 40	0.0002	0.0001
40 and over	0.0001	0.0001

Impact vibrations which are discrete pulses that do not exceed one hundred (100) impulses per minute shall be permitted twice the displacements shown above in columns I and II.

DRAFT

C. Smoke And Particulate Matter:

1. The emission of smoke or particulate matter in such manner or quantity as to be detrimental to or endanger the public health, safety, comfort, or welfare is hereby declared to be a public nuisance and shall henceforth be unlawful.

2. For the purpose of grading the density or equivalent capacity of smoke, the Ringelmann chart described in the bureau of mines information circular 6888 shall be employed. The emission of smoke or particulate matter of a density or equivalent greater than no. 1 on the Ringelmann chart is prohibited at all times except as otherwise provided hereinafter.

3. The emission of smoke or particulate matter of a density greater than Ringelmann no. 3 is permitted once in any twenty four (24) hour day for no more than three (3) minutes.

4. Wind generated dust from such sources as storage areas, yards, roads, and so forth, within lot boundaries shall be minimized by appropriate landscaping or all weather paving.

5. The emission of particulate matter from any chimney, stack, or vent shall not exceed one-fourth (1/4) pound per hour per acre of lot area.

D. Toxic Matter: No use shall discharge beyond the boundaries of the lot toxic matter in such concentrations as to be detrimental to, or endanger the public health, safety, comfort or welfare, or cause injury or damage to property or business.

E. Odors: The emission of odorous matter in excess of the odor threshold measured beyond the boundaries of the lot at ground level or at habitable elevation is prohibited.

F. Fire And Explosion Hazard:

1. The storage, utilization, or manufacture of solid materials ranging from incombustible to moderate burning is permitted.

2. The storage or utilization of solid materials ranging from free or active burning to intense burning is permitted provided the following conditions are met:

a. The materials shall be stored or utilized within completely enclosed buildings or structures having incombustible exterior walls and handled in accordance with the standards and regulations of the village and the National Fire Protection Association.

b. All such buildings shall be set back at least forty feet (40') from all lot lines or, in lieu thereof, shall be protected throughout by an automatic fire extinguishing system installed in accordance with the standards and regulations of the village and the National Fire Protection Association.

c. Said materials, if stored outdoors, shall be no closer than one hundred fifty feet (150') to the nearest lot line in conformance with the standards and regulations of the village and the National Fire Protection Association.

DRAFT

3. The storage or utilization of flammable liquids or materials which produce flammable or explosive vapors shall be permitted in accordance with the following limitations, exclusive of storage in underground tanks, and storage of finished products in original sealed containers:

a. Said materials or products shall be stored or utilized within completely enclosed buildings having incombustible exterior walls, and handled in accordance with the standards and regulations of the village and the National Fire Protection Association and, in addition, all such buildings shall be set back at least forty feet (40') from all lot lines and shall be protected throughout by an automatic fire extinguishing system installed in accordance with the standards and regulations of the village and the National Fire Protection Association.

b. The aboveground storage of flammable liquids in excess of the following quantities shall not be permitted:

Closed Cup Flash Point	Quantity (Gallons)
Less than 24°F	1,000
24°F to less than 105°F	2,000
105°F to less than 187°F	5,000
187°F and higher	10,000

c. The total of all flammable liquids permitted on any lot shall not exceed ten thousand (10,000) gallons.

G. Glare And Heat: Any operation producing glare or heat shall be performed within a completely enclosed building in such manner as not to create a public nuisance or hazard beyond the boundaries of the lot.

H. Radiation Hazards:

1. The release of radioactive gases and particulate matter shall not exceed the maximum allowable concentration permitted the general population of applicable federal, state and local laws and regulations when measured at or beyond the lot line at ground level or habitable elevation.

2. No activity involving radiation hazards shall be permitted which causes exposure to persons at or beyond the lot lines in excess of the maximum allowable permitted the general population in applicable federal, state and local laws and regulations. (Ord. G-60, 3-22-1966; Ord. G-233, 5-31-1978; Ord. G-863, 7-22-2008)

DRAFT

13-10-4: OUTDOOR DINING AREAS:

A. For the purposes of this section, "outdoor dining areas" are defined as the use of an adjacent, outside area by a restaurant for the same eating and drinking activities that occur within the restaurant.

B. The following regulations shall apply to outdoor dining areas:

1. The location of any outdoor dining area comply with all setback requirements in the applicable zoning district and shall not obstruct pedestrian or vehicular traffic. A minimum of five feet (5') of sidewalk clearance shall be maintained at all times for pedestrian travel;

2. Any outdoor dining area be under the direct supervision and control of the principal restaurant, and such dining area be enclosed by a fence or other protective safety barrier which shall be constructed to clearly delineate the boundaries of the area and to protect the health and safety of restaurant patrons and the general public;

3. The hours of operation of any outdoor dining area be within the normal operating hours of the principal restaurant;

4. There shall be no live entertainment in the outdoor dining area;

5. Plans shall be provided delineating the location of the outdoor dining area, and such location be approved by the Building Official as part of a building permit. The outdoor dining area shall be maintained in compliance with the approved plans;

6. The principal restaurant and outdoor dining area shall be in compliance with all the requirements of this code and all other applicable rules and regulations of any other governing agency including the DuPage County Health Department regarding restaurant and outdoor dining areas. (Ord. g-1163, 4-24-2020)

ARTICLE A. ORA1 OFFICE-RESEARCH-ASSEMBLY DISTRICT

SECTION:

13-10A-1: Permitted Uses

13-10A-2: Special Uses

13-10A-3: Lot Area Requirements

13-10A-4: Additional Regulations

13-10A-1: PERMITTED USES:

Accessory uses and structures, including storage and service areas within the structures, garages for delivery trucks, central heating and air conditioning plants, and storage areas, yards, shops and similar facilities that are used solely for operating, servicing or maintaining

the activities and improvements within the lot on which the accessory use is located. Accessory uses and structures shall also include dwellings occupied by watchmen, janitors, maintenance and similar employees engaged upon the premises; but no dwellings shall be erected for any other purposes.

Any establishment, the principal use of which is manufacturing, fabricating, processing, assembly, repairing, storing, cleaning, servicing or testing of materials, goods or products, provided that operations conform with performance standards and other requirements of this title.

Churches, on lots not less than four (4) acres in area.

Data Centers

Electric distribution centers and substations.

Gas regulator stations.

Offices and financial institutions. (Ord. G-60, 3-22-1966)

13-10A-2: SPECIAL USES:

Clinics, medical and dental, including accessory laboratories.

Daycare centers, provided such facility complies with all licensing requirements of the state and maintains a direct alarm hookup to the police department or other emergency dispatch center.

Drive-in banking facilities.

Health clubs, private, membership only, in multibuilding office complexes under single ownership or control on sites not less than ten (10) acres, when such facility is designed primarily for use by tenants of the office complex. Such structure shall not front on any perimeter road, and access thereto shall be provided only from interior roadways.

Heliports (not for freight) shall meet all of the standards as contained in subsection 13-10A-4C of this article.

Hotels.

Outdoor ATM (automated teller machine) walk-up or drive-thru

Parks and open field recreational activities.

Personal service and retail sales uses intended primarily for the use of tenants and having no exterior advertising and accessible only from the lobby or interior of the building, limited to:

Barbershops and beauty parlors.

Drugstores.

DRAFT

Newsstands; newspapers, magazines and other periodicals.

Tobacco shops.

Public utility, governmental service and transportation uses:

Bus turnarounds and passenger shelters.

Emergency warning system structures.

Fire and police stations.

Post office operated by the United States government.

Sewage and stormwater lift stations.

Telephone exchanges, transmission buildings and equipment, and outdoor telephone booths and pedestals.

Water filtration plants, wells, pumping stations and reservoirs.

Radio and television stations and production studios.

Restaurants with accessory cocktail lounges and outdoor dining areas, without facilities for dancing and live entertainment, in multibuilding office complexes under single ownership or control on sites not less than ten (10) acres, when such facility is designed primarily for use by tenants of the office complex. Such structure shall not front on any perimeter road, and access thereto shall be provided only from the interior roadways.

Schools, nonresidential, post baccalaureate school; provided, that not more than twenty percent (20%) of the course offerings may be prerequisite to admission to the post baccalaureate programs. (Ord. G-60, 3-22-1966; Ord. G-131, 5-25-1971; Ord. G-210, 2-8-1977; Ord. G-275, 1-20-1981; Ord. G-305, 9-8-1981; Ord. G-424, 1-24-1989; Ord. G-448, 7-10-1990; Ord. G-471, 8-13-1991; Ord. G-483, 3-10-1992; Ord. G-487, 5-12-1992; Ord. G-536, 7-12-1994; Ord. G-553, 3-14-1995; Ord. G-669, 1-23-2001; Ord. G-724, 7-22-2003; Ord. G-785, 6-28-2005; Ord. G-1163, 4-28-2020)

13-10A-3: LOT AREA REQUIREMENTS:

A. Floor Area Ratio: Not to exceed 0.48.

B. Structure Height: Not more than five (5) stories or seventy-six feet (76'), whichever is less.

C. Yards:

1. Front: Not less than one hundred feet (100') in depth, except when adjacent to a residence district boundary line not less than one hundred fifty feet (150') in depth;

2. Side: Not less than thirty feet (30') in depth, except: a) that portion of a side yard when abutting a residence district shall not be less than one hundred fifty feet (150') in depth; b) a

side yard abutting a street shall conform in depth to the front yard depth of a contiguous lot abutting on such street; and c) side yards abutting 22nd Street and York Road shall have a depth of not less than one hundred feet (100');

3. Rear: Not less than forty feet (40') in depth, except that portion of a rear yard abutting a residence district shall be not less than one hundred fifty feet (150') in depth, and except that a rear yard abutting an alley or service drive may be reduced by twenty feet (20') in depth;

4. Conservation/Recreation Districts: Notwithstanding anything contained in this title to the contrary, including, without limitation, section 13-3-13 of this title, any yard which is one hundred feet (100') in depth and which is adjacent in its entirety to a conservation/recreation district boundary shall satisfy the applicable yard requirement;

provided, however, that when a developed zoning lot which contains two (2) or more principal buildings is subdivided the yards required along the new lot lines created by the subdivision shall be not less than thirty feet (30') in depth and the depth of all required yards for each lot shall be shown on the subdivision plat; provided, that existing parking stalls and aisles and access and service drives shall be permitted to continue within said yards and within the yards along the boundaries of the original zoning lot required by subsections C1, C2 and C3 of this section, as modified by subsection 13-12-3H of this title; and provided further that upon redevelopment of any part of a lot, other than for resurfacing or for utility replacement, which development requires removal of existing parking stalls or aisles located in whole or in part within areas where such accessory uses are not permitted by said subsections as so modified, no new stalls or aisles shall be constructed in such areas except as permitted by said subsections as so modified, and any landscaping therein required by this title shall be promptly installed and properly maintained. (Ord. G-60, 3-22-1966; Ord. G-135, 5-22-1971; Ord. G-213, 3-22-1977; Ord. G-554, 5-9-1995; Ord. G-557, 7-25-1995; Ord. G-676, 4-10-2001)

13-10A-4: ADDITIONAL REGULATIONS:

A. Awnings, Marquees And Signs: See chapter 11 of this title.

B. Off Street Parking And Loading: Off street parking and loading shall be as provided in chapter 12 of this title.

C. Heliports 1 :

1. If the federal aviation administration has conducted an aeronautical study to determine the effect of the proposed heliport on the safe and efficient use of the navigable air space by aircraft and find no objection to the proposed heliport.

2. The layout and design of the heliport, including approach and departure paths, shall conform to the most current rules and regulations of the division of aeronautics, state of Illinois, department of transportation. Any approval for a heliport granted by the village shall be subject to evidence that said division of aeronautics has issued an order authorizing the applicant to proceed with construction of the heliport in accordance with plans approved by it; provided, however, that any waiver of such rules and regulations granted by said division

shall be subject to approval by the village. No permit for the construction of a heliport will be given until such an order has been issued by said division.

3. Hours of operation shall be from seven o'clock (7:00) A.M. to ten o'clock (10:00) P.M. Monday through Saturday. The heliport may also be used on Sunday, provided the village is advised seventy-two (72) hours in advance, and said use does not exceed one such use per month.

4. Approach and departure patterns from said heliport shall be limited to avoid operation over residential areas.

5. Refueling, routine maintenance and storage of helicopter, except for emergency purposes only, shall not be permitted at the heliport.

6. There will be no receiving or shipping of freight from said heliport, and there will be no on site storage of fuel.

7. Use of the heliport shall at all times comply with any specific requirements of the federal aviation administration or Illinois department of transportation in the certificate of approval or operation issued to the user of the heliport by such agencies.

8. Special use shall only be applicable to the applicant therefor and only so long as the applicant is occupying the subject property, provided, however, that pursuant to a special use permit application identifying a specific user occupying property adjacent to the subject property, the special use also may be made applicable to such user for so long as such user occupies adjacent property.

9. The applicant shall maintain at all times appropriate and sufficient insurance coverage relative to the installation and use of the heliport insuring against any property damage or personal injury arising therefrom with policy limits of not less than twenty million dollars ($20,000,000.00).

10. All such special uses shall be reviewed by the village every five (5) years for conformance with the conditions set forth herein, character of safety and extent of operations and any further relevant factors.

11. Helicopters utilizing a heliport shall fly at the maximum safe level prior to entering the approach pattern to the heliport.

12. Use of the heliport shall be made available to the village or its designees for emergencies.

13. A log of usage shall be submitted to the village on an annual basis, or as otherwise required by the village. (Ord. G-60, 3-22-1966; Ord. G-82, 4-9-1968; Ord. G-178, 12-9-1975; Ord. G-305, 9-8-1981; Ord. G-471, 8-13-1991; Ord. G-553, 3-14-1995; Ord. G-695, 3-26-2002)

Notes

DRAFT

1 1. See section 13-10A-2 of this article, heliports as a special use.

ARTICLE B. ORA2 OFFICE-RESEARCH-ASSEMBLY DISTRICT

SECTION:

13-10B-1: Permitted Uses

13-10B-2: Special Uses

13-10B-3: Lot Area Requirements

13-10B-4: Additional Regulations

13-10B-1: PERMITTED USES:

Accessory uses and structures, including storage and service areas within the structures, garages for delivery trucks, off street parking, central heating and air conditioning plants, and storage areas, yards, shops, and similar facilities that are used solely for operating, servicing, or maintaining the activities and improvements within the district. Accessory structures and uses shall also include dwellings occupied by watchmen, janitors, maintenance and similar employees engaged upon the premises; but no dwelling shall be erected for any other purpose.

Permitted uses as allowed in the B2 regional shopping center district.

Permitted uses as allowed in the ORA1 office-research-assembly district. (Ord. G-60, 3-22-1966; Ord. G-758, 8-24-2004)

13-10B-2: SPECIAL USES:

Daycare centers, provided such facility complies with all licensing requirements of the state and maintains a direct alarm hookup to the police department or other emergency dispatch center.

Drive-in establishments for retail banks and freestanding restaurants.

Heliports (not for freight) shall meet all of the standards as contained in subsection 13-10A-4C of this chapter.

Nonresidential, postbaccalaureate schools.

Outdoor ATM (automated teller machine) walk-up or drive-thru

Public utility, governmental service and transportation uses:

Bus turnarounds and passenger shelters.

Fire and police stations.

Sewage and stormwater lift stations.

Telephone exchanges, transmission buildings and equipment, and outdoor telephone booths and pedestals.

Water filtration plants, wells, pumping stations and reservoirs. (Ord. G-980, 9-25-2012; Ord. G-1163, 4-28-2020)

13-10B-3: LOT AREA REQUIREMENTS:

A. Floor Area Ratio: Not to exceed 1.2 for office uses, financial uses and accessory uses thereto; 0.8 for other uses permitted in the ORA1 district; and 0.3 for uses as permitted in the B2 regional shopping district.

B. Structure Height: Not more than twelve (12) stories or one hundred seventy four feet (174'), whichever is less.

C. Yards:

1. Front: Not less than one hundred feet (100') in depth, except when adjacent to a residence district boundary line not less than one hundred fifty feet (150') in depth, provided that required front yards may be occupied by drives, sidewalks, landscaping and similar facilities.

2. Side: Not less than thirty feet (30') in depth, except: a) that portion of a side yard abutting a residence district shall be not less than one hundred fifty feet (150') in depth; b) a side yard abutting a street shall be not less than fifty feet (50') in depth; c) each interior side yard shall be increased by not less than one foot (1') for each one foot (1') of structure height over thirty two feet (32'); and d) side yards abutting 22nd Street and York Road shall have a depth of not less than one hundred feet (100'), provided that required side yards may be occupied by drives, vehicular parking, sidewalks, landscaping, and similar facilities provided that paved parking areas shall not be located closer than forty feet (40') to any lot in a residence district.

3. Rear: Not less than twenty feet (20') in depth, except that portion of a rear yard abutting a residence district shall be not less than one hundred feet (100') in depth, provided that required rear yards may be occupied by drives, vehicular parking, sidewalks, landscaping and similar facilities provided that paved parking areas shall not be located closer than forty feet (40') to any lot in a residence district. (Ord. G-60, 3-22-1966; Ord. G-213, 3-22-1977; Ord. G-557, 7-25-1995; Ord. G-758, 8-24-2004)

13-10B-4: ADDITIONAL REGULATIONS:

A. Awnings, Marquees And Signs: See chapter 11 of this title.

DRAFT

B. Off Street Parking And Loading: Off street parking and loading shall be as provided in chapter 12 of this title. (Ord. G-60, 3-22-1966; Ord. G-695, 3-26-2002)

ARTICLE C. ORA3 OFFICE-RESEARCH-ASSEMBLY DISTRICT

SECTION:

13-10C-1: Purpose

13-10C-2: Permitted Uses

13-10C-3: Special Uses

13-10C-4: Lot Area Requirements

13-10C-5: Additional Regulations

13-10C-6: Procedures

13-10C-1: PURPOSE:

The ORA3 district is designed to permit and encourage orderly and attractive site planning in accordance with an overall design which provides for the preservation of natural site qualities, a high proportion of open space, and an arrangement of land uses and physical features into a harmonious design compatible with the surrounding area. It is intended that an area may be classified as an ORA3 district only when the following conditions are met:

A. Not less than fifty percent (50%) of the property shall be permanently devoted to open space which shall consist of planted areas (including planted surfaces of parking decks), forests, lagoons, watercourses, storm water swales and retention areas, pedestrian, bicycle, and bridle paths and walkways, with the maximum practicable retention of forests and other natural vegetation.

B. All buildings and parking, and other structures to the extent practical, will be substantially screened from public view from public streets and streets privately owned and maintained in residential developments in accordance with a landscaping plan to be submitted for approval by the village.

C. All roads and bridges will be retained in private ownership and constructed to meet village standards and maintained by the owner without cost to the village.

D. All access to and from the property can be constructed and maintained so that substantially all traffic generated will use commercial thoroughfares. (Ord. G-60, 3-22-1966)

13-10C-2: PERMITTED USES:

The following are permitted uses within the ORA3 district, but only to the extent that each such use is in accordance with an approved Planned ~~d~~Development ~~plan~~:

Accessory uses and structures including the following:

Central heating and air conditioning plants.

Daycare centers, provided such facility complies with all licensing requirements of the state and maintains a direct alarm hookup to the police department or other emergency dispatch center.

Limited retail and service facilities.

Living quarters (not in separate residential buildings) solely for occupancy of watchmen, janitors, maintenance, and similar employees (and their families) employed in connection with the maintenance and security of the property and improvements thereon.

Lodging facilities (together with restaurant and accessory cocktail lounge) for the transient use of employees of the owner, its subsidiaries, affiliates, franchisees, and other business invitees.

Nonpublic meeting and conference facilities.

Private recreational use, such as tennis courts, putting greens, swimming pools, bowling alleys, racquetball courts, baseball diamonds, stables, bridle paths, and health facilities.

Public utility and transportation uses, such as:

Bus turnarounds and passenger shelters;

Electric distribution stations solely for serving the development;

Outdoor telephone booths;

Sewerage and storm water lift stations;

Wells and reservoirs.

Radio and television production studios.

Research and development facilities.

Storage, service, and maintenance buildings and areas.

Temporary buildings for construction purposes and construction equipment storage areas, for a period not to exceed thirty (30) days following completion of construction.

Hotels.

Office, business and professional; provided, however, that following completion of any phase and for five (5) years thereafter not more than thirty three percent (33%) of the office space

DRAFT

shall be occupied by persons other than employees or business invitees of either: a) the owner, its successors or subsidiaries or affiliated corporations thereof, or joint venturers or partners of the owner; or b) tenants who are suppliers for or consultants to the owner.

Restaurants (which may include musical entertainment and dancing, cocktail lounges and tearooms) and outdoor dining areas (as described in section 13-10-4). (Ord. G-60, 3-22-1966; Ord. G-447, 4-24-1990; Ord. G-558, 7-25-1995; Ord. G-696, 6-11-2002; Ord. G-1163, 4-28-2020)

13-10C-3: SPECIAL USES:

Heliport (not for freight), shall meet all of the standards as contained in subsection 13-10A-4C of this chapter and may be located on a roof of a building of four (4) stories or less.

Not for profit, noncommercial performing and fine arts center.

Schools of music, fine arts, dance, theater, and other arts. (Ord. G-60, 3-22-1966; Ord. G-305, 9-8-1981)

13-10C-4: LOT AREA REQUIREMENTS:

A. Lot Area: Not less than twenty four (24) acres.

B. Floor Area Ratio:

1. Not to exceed 0.44 for permitted and accessory uses;

2. Not to exceed 0.01 for special uses.

C. Open Space:

1. Not more than twenty four percent (24%) of the property shall be covered by buildings, including parking structures.

2. Not less than fifty percent (50%) of the property shall be "open space" as defined in subsection 13-10C-1A of this article.

D. Structure Height: Not to exceed thirty five feet (35') or three (3) stories, whichever is less; provided, however, that parking structures may be above that height but shall not exceed the lesser of four (4) stories or forty feet (40') unless located within an office building structure; and that up to forty five percent (45%) of the total permitted office floor area may be above that height but shall not exceed the lesser of six (6) stories or seventy five feet (75'); and up to ten percent (10%) of the total permitted lodging facilities floor area may be above that height, but shall not exceed the lesser of five (5) stories or sixty feet (60').

E. Yards: No structure other than signs as provided for in subsection 13-10C-5A of this article, shall be erected or maintained within one hundred feet (100') from any boundary of said property, except that said area may be occupied by drives, vehicular parking, sidewalk,

landscaping, gatehouse entrance treatment and similar facilities, except that paved parking areas shall not be located on required yards adjacent to public streets or within forty feet (40') of all other boundary lines. (Ord. G-60, 3-22-1966; Ord. G-558, 7-25-1995)

13-10C-5: ADDITIONAL REGULATIONS:

A. Signs: See chapter 11 of this title.

B. Off Street Parking And Loading: Off street parking and loading shall be as provided in chapter 12 of this title, except that if the approved Planned ~~d~~Development ~~plan~~ shall reserve enough land area to satisfy the full requirements of chapter 12 of this title, then only sixty percent (60%) of the required parking for any phase of the development need be developed until and unless the village determines that the existing parking is inadequate. At such time, the owner shall construct additional parking spaces as required by chapter 12 of this title up to one hundred percent (100%). An amount equal to twenty percent (20%) of the parking provided for the development shall be located in an office building and/or in underground parking facilities decked over with architectural landscaping. (Ord. G-60, 3-22-1966; Ord. G-447, 4-24-1990; Ord. G-558, 7-25-1995; Ord. G-695, 3-26-2002)

13-10C-6: PROCEDURES FOR PLAN APPROVAL IN THE ORA-3:

~~A. The applicant shall concurrently file with the village clerk:~~

~~1. An application for rezoning of the property to an ORA3 office- research-assembly district classification; and~~

2. An application for approval of a proposed ~~development plan~~ Planned Development.

~~B. Such applications shall be processed in the manner provided in section 13-14-8 of this title.~~

~~C. The proposed development plan shall include the following:~~

~~1. A statement as to the following:~~

~~a. The period of time expected to be required to implement the development plan Planned Development, and each development phase necessary or desirable for full implementation thereof.~~

~~b. The total acreage allocated for each principal and accessory use, including, but not limited to, open space, office and other buildings and structures, parking and other accessory uses.~~

~~c. The conditions and limitations relating to the development of the property.~~

~~2. A plat setting forth graphically on a scaled drawing drawn to a scale not smaller than one hundred feet to one inch (1" = 100'), which shall include the following information:~~

~~a. The boundaries of the site and location of adjacent public streets;~~

~~b. The general location of proposed vehicular access points and internal private drives;~~

~~c. The proposed boundaries of areas within the site of: 1) open space areas where no building or parking lots will be permitted; 2) building areas where buildings and other structures and parking lots will be permitted;~~

~~d. The location of water channels, storm water detention areas, lakes and ponds;~~

~~provided, that prior to final approval of improvement plans as provided for in subsection E of this section, all of such areas shall be precisely defined.~~

~~D. The applicant shall also provide the following:~~

~~1. A statement of the planning objectives to be achieved by the development.~~

~~2. A plat of survey of the site.~~

~~3. A topographical analysis of the site with contour intervals of not more than two feet (2').~~

~~4. An aerial photograph of the site at a scale of not less than two hundred feet to the inch (1" = 200').~~

~~5. Information on existing water mains, sanitary sewers, storm sewers, storm water retention and runoff, stream channels, floodplains and floodways, lakes and ponds.~~

~~6. A study by traffic engineers providing information on the impact of the development on public streets and intersections.~~

~~7. A plat or map showing the land uses, physical features and zoning of all adjacent lands within four hundred (400) yards of the site.~~

~~E. Following final approval of the Planned dDevelopment plan for the site, no building permit shall be issued and no improvements shall be commenced until an improvement plan shall have been approved in the manner provided in the applicable provisions of the subdivision regulations 1 .~~

~~F. The owner of property zoned ORA3 may file from time to time applications for approval of proposed amendments to an approved Planned dDevelopment plan, which applications shall be processed in the manner provided in subsections B through E of this section. (Ord. G-60, 3-22-1966; Ord. G-233, 5-31-1978)~~

~~Notes~~

~~1 1. See title 14 of this code.~~

ARTICLE D. O3 OFFICE DISTRICT

SECTION:

13-10D-1: Permitted Uses

13-10D-2: Special Uses

13-10D-3: Lot Area Requirements

13-10D-4: Additional Regulations

13-10D-1: PERMITTED USES:

Accessory uses and structures including:

Restaurants, accessory cocktail lounges, and outdoor dining areas (as described in section 13-10-4) over five (5) stories in height which is used principally for a permitted use, and when located on floors below those used for the principal use or on the top floor or roof of such structure.

Retail sales and personal service uses, having no exterior advertising and accessible only from the lobby and interior of a building (which is over 12 stories in height) and used for a permitted principal use and when no single establishment occupies more than two thousand (2,000) square feet of floor area.

Banks and financial institutions.

Electric distribution centers and substations.

Gas regulator station.

Offices. (Ord. G-60, 3-22-1966; Ord. G-842, 10-9-2007; Ord. G-1163, 4-28-2020)

13-10D-2: SPECIAL USES:

Daycare center, provided such facility complies with all licensing requirements of the state and maintains a direct alarm hookup to the Oak Brook police department.

Heliports, not for freight, shall meet all of the standards as contained in subsection 13-10A-4C of this chapter. Additionally, the operation of said heliport shall meet the performance standards as contained in section 13-10-3 of this chapter.

Hotel or combination office and hotel.

Public utility, governmental service and transportation uses.

Bus turnarounds and passenger shelters.

Emergency warning system structures.

DRAFT

Fire and police stations.

Outdoor ATM (automated teller machine) walk-up or drive-thru

Sewage and storm water lift stations.

Telephone exchanges, transmission buildings and equipment, and outdoor telephone booths and pedestals.

Water filtration plants, wells, pumping stations and reservoirs. (Ord. G-60, 3-22-1966; Ord. G-454, 10-9-1990; Ord. G-483, 3-10-1992; Ord. G-747, 4-27-2004; Ord. G-1163, 4-28-2020)

13-10D-3: LOT AREA REQUIREMENTS:

A. Floor Area Ratio: Not to exceed 0.8.

B. Yards:

1. Front: Not less than one hundred feet (100') in depth, except when adjacent to a residence district boundary line not less than one hundred fifty feet (150') in depth.

2. Side: Not less than thirty feet (30') in depth, except: a) that portion of a side yard abutting a residence district shall be not less than one hundred fifty feet (150') in depth; b) a side yard abutting a street shall be not less than forty feet (40') in depth; and c) a side yard abutting 22nd Street shall be not less than one hundred feet (100') in depth.

3. Rear: Not less than forty feet (40') in depth, except that portion of a rear yard abutting a residence district shall be not less than one hundred feet (100') in depth and except that a rear yard abutting an alley or service drive may be reduced by twenty feet (20') in depth. (Ord. G-60, 3-22-1966; Ord. G-213, 3-22-1977)

13-10D-4: ADDITIONAL REGULATIONS:

A. Awnings, Marquees And Signs: See chapter 11 of this title.

B. Off Street Parking And Loading: Off street parking and loading shall be as provided in chapter 12 of this title. (Ord. G-60, 3-22-1966; Ord. G-233, 5-31-1978; Ord. G-305, 9-8-1981; Ord. G-695, 3-26-2002)

DRAFT

ARTICLE E. O4 OFFICE DISTRICT

SECTION:

13-10E-1: Permitted Uses

13-10E-2: Special Uses

13-10E-3: Lot Area Requirements

13-10E-4: Additional Regulations

13-10E-1: PERMITTED USES:

Accessory uses and structures including:

Restaurants including outdoor dining (as described in section 13-10-4) and accessory cocktail lounges in a structure five (5) stories or more in height which is used principally for a permitted use, and when located on the ground or on floors below those used for the principal use or on the top floor or roof of such structure.

Retail sales and personal service uses when no single establishment occupies more than two thousand (2,000) square feet of floor area.

Buildings existing at the time of rezoning to O4 office district may be used for any of the uses permitted in the zoning district applicable to the property at the time of its rezoning; provided that in the event that: a) the structure is substantially damaged and the owner is not required by the lease or otherwise to restore the structure to its prior condition; or b) the structure is not occupied, used or leased for such purpose or purposes for a period of twelve (12) consecutive months, then its future use shall be limited to one or more of the uses permitted in this article, or, with the prior approval of the village board of trustees, to one or more of the special uses set forth in section 13-10E-2 of this article.

Electric distribution centers and substations.

Gas regulator station.

Office supply retail establishments.

Offices. (Ord. G-60, 3-22-1966; Ord. G-1163, 4-28-2020)

13-10E-2: SPECIAL USES:

Daycare center, provided such facility complies with all licensing requirements of the state and maintains direct alarm hookup to the Oak Brook police department.

Health clubs, private, membership only, in multi-building office complexes under single ownership or control on sites not less than ten (10) acres. Such structure shall not front on any perimeter road, and access thereto shall be provided only from interior roadways.

Heliports, not for freight, shall meet all of the standards as contained in subsection 13-10A-4C of this chapter. Additionally, the operation of said heliport shall meet the performance standards as contained in section 13-10-3 of this chapter.

Hotel or combination office and hotel.

Medical offices.

Outdoor ATM (automated teller machine) walk-up or drive-thru

Mixed use development on properties not less than ten (10) acres in area subject to the following:

A. Authorized Uses:

1. Permitted; B1 District; Exceptions: All permitted uses authorized in the B1 local shopping center district, except that the following uses are not permitted:

Fire stations.

Launderettes, including automatic self-service dry cleaning equipment.

Libraries, branch.

Police stations.

2. Permitted; B-2 District; Exceptions: All permitted uses in the B-2 regional shopping center district, except that the following uses are not permitted:

Automobile service stations.

Electric distribution centers and substations.

Gas regulator stations.

Hospitals, having not more than ten (10) beds and first aid stations for the treatment of emergency cases.

Laundries, dyeing and cleaning establishments.

Laundries, self-service, and shops for the collection and distribution of laundry and dry cleaning articles.

Messenger and telephone service stations.

Printing plants, newspaper, magazine and similar publications.

Radio and television broadcasting stations.

DRAFT

Service, cleaning and repair shops, for personal, household or garden equipment.

3. Permitted; B-3 District; Exceptions: All permitted uses in the B-3 general business district, except that the following uses are not permitted:

Animal hospitals and veterinarian offices.

Automobile accessory stores.

Automobile service stations.

Building material sales, not including outside storage.

Cartage and express facilities.

Clothing pressing establishments.

Clubs, lodges and fraternal organizations.

Coin and philatelic stores.

Electric distribution centers and substations.

Employment agencies.

Exhibition halls.

Fire stations.

Garages, public, where body repair and painting are incidental accessory uses, but not including automobile wrecking yards.

Garages, storage.

Gas regulator stations.

Greenhouses and conservatories.

Kennels, with no outdoor dog runs.

Laboratories, medical, dental or optical.

Libraries.

Locksmith shops.

Mail order service stores.

Orthopedic and medical appliance stores.

Pet service, domestic.

Physical culture and health service, gymnasiums, reducing salons, massage salons and public baths.

DRAFT

Plumbing, heating, air conditioning and electrical fixtures and equipment, showroom and shops, for domestic use only.

Police stations.

Radio and television stations.

Recording studios.

Recreational buildings, community centers and meetings halls.

Religious institutions, churches, chapels, temples or synagogues.

Sewing machine sales and services.

Taxidermists.

Telegraph offices.

Typewriter and adding machine sales and service establishments.

Undertaking establishments and funeral parlors.

4. Special; B-1 District; Exceptions: All special uses authorized in the B-1 local shopping center district, except as specified in subsection A7 of this use.

5. Special; B-2 District; Exceptions: All special uses in the B-2 regional shopping center district, except as specified in subsection A7 of this use.

6. Special; B-3 District; Exceptions: All special uses in the B-3 general business district, except as specified in subsection A7 of this use.

7. Nonpermitted Uses: The following uses are not permitted, notwithstanding the provisions of the zoning regulations:

Amusement establishments, including gymnasiums, swimming pools and skating rinks.

Automobile minimarket.

Automobile service stations.

Clubs, lodges, fraternities and community centers.

Drive-in establishments for permitted uses.

Fire and police stations.

Gas regulator stations.

Horse stables and riding academies, public.

Nursing homes.

DRAFT

Open sales lots, when accessory to new automobile, trailer or boat sales establishments.

Recreation, outdoor, par 3 and miniature golf courses, golf driving ranges, swimming and tennis clubs, and other outdoor recreation uses as approved by the village board of trustees.

Water filtration plants, wells, pumping stations and reservoirs.

8. Additional Authorized Uses:

Bakeries, where not more than forty percent (40%) of the floor area is devoted to processing.

Barber shops and beauty parlors, day spas, tanning salons.

Clinics, medical, dental and optometric including accessory laboratories.

Drive-in and drive-through banking facilities.

Garden supply, retail.

Health clubs, including accessory uses such as daycare, spa services including tanning and salon, selling of goods including clothing, food, other items related to health and well being.

Indoor entertainment facilities, except for game rooms and pool rooms.

Offices: business, professional and public. Any such office use may also include a daycare center.

Retail food products sales facilities.

Seasonal, portable carts serving only limited menu foods and/or beverage items in outdoor areas of a shopping center as a convenience to pedestrian shoppers, provided that: a) all aspects of the operation and sales meet the applicable requirements of the DuPage County health department; and b) cart locations have appropriate utilities provided, are not convenient to drive-up business, and do not materially interfere with access to or visibility of other establishments within the shopping center.

Single-family attached dwellings.

~~B. Lot Requirements:~~

~~1. Yards:~~

~~a. Front: Not less than one hundred feet (100') in depth; provided that parking may be installed and utilized in this setback along York Road not less than thirty feet (30') of the property line; and further provided that canopies may encroach no more than eight feet (8') into any required front yard;~~

~~b. Rear: Not less than thirty feet (30'); provided that canopies may encroach no more than eight feet (8') into any required rear yard; and further provided that hotel and condominium canopies may encroach no more than fifteen feet (15') into any required rear yard;~~

~~c. Side: Not less than thirty feet (30'); provided that canopies may encroach no more than eight feet (8') into any required side yard; and further provided that hotel and condominium entryway coverings may encroach no more than fifteen feet (15') into a required side yard;~~

~~provided, however, that when a developed zoning lot which contains two (2) or more principal buildings is subdivided the yards required along the new lot lines created by the subdivision shall be not less than thirty feet (30') in depth and the depth of all required yards for each lot shall be shown on the subdivision plat; provided, that existing parking stalls and aisles and access and service drives shall be permitted to continue within said yards and within the yards along the boundaries of the original zoning lot required by this subsection B1, as modified by subsection 13-12-3H of this title; and provided further that upon redevelopment of any part of a lot, other than for resurfacing or for utility replacement, which development requires removal of existing parking stalls or aisles located in whole or in part within areas where such accessory uses are not permitted by said subsections as so modified, no new stalls or aisles shall be constructed in such areas except as permitted by said subsections as so modified, and any landscaping therein required by this title shall be promptly installed and properly maintained.~~

~~2. Floor Area Ratio: Not to exceed 1.0.~~

~~3. Structure Height: Not more than sixteen (16) stories or one hundred eighty feet (180'), whichever is greater.~~

~~C. Parking And Loading: In a mixed use development containing hotel and/or office uses:~~

~~1. Up to thirty five percent (35%) of required parking spaces for all uses may have a minimum width of eight and one-half feet (8.5').~~

~~2. No more than fifteen percent (15%) of required parking spaces may be located within one hundred feet (100') of York Road.~~

~~3. Notwithstanding the provisions of subsection 13-12-3C of this title, the minimum aisle width shall be twenty four feet (24').~~

~~4. The following provisions shall govern driveways notwithstanding the provisions of subsection 13-12-3E of this title: Spacing between driveways shall be consistent with good engineering practice as reasonably determined by the village engineer and not less than thirty five feet (35').~~

~~5. The following provisions shall govern loading requirements, notwithstanding the provisions of section 13-12-7 of this title: Loading docks and loading berths are not required provided that off street loading areas are installed.~~

DRAFT

~~D. Signs:~~

~~1. Monument Signs:~~

~~a. One at fifteen feet by sixteen feet (15' x 16') (2 sided) with slots for tenant signage (240 square feet, each side, 480 square feet total).~~

~~b. One at ten feet by sixteen feet (10' x 16') (2 sided) (160 square feet each side, 320 square feet total).~~

~~2. Directional And Miscellaneous/Wayfinding Signs:~~

~~a. Up to twenty (20) signs, each no more than twenty (20) square feet.~~

~~3. Restaurant And Retail Signs:~~

~~a. On building signage/entrance signage.~~

~~b. Gross surface area of all signs shall be no more than two (2) times the number of linear feet in the length of the building wall facing a public street.~~

~~c. On a corner or through lot, a sign may be erected along each street frontage.~~

~~d. Height of letters are limited to thirty six inches (36").~~

~~e. The sign shall not project more than thirty inches (30") from any facade or canopy and shall not be higher than the top of the building.~~

~~4. Blade Signage: The following sign provisions are available for each occupant of any nonresidential use:~~

~~a. Signage shall be no larger than eight (8) square feet.~~

~~b. Height of letters are limited to twelve inches (12").~~

~~c. Signage shall be at least eight feet (8') above the elevation of the sidewalk.~~

~~d. Signage shall project no more than sixty inches (60") from the facade.~~

~~5. Health Club Signs:~~

~~a. Building signage/entrance signage.~~

~~b. Gross surface area shall be no more than six hundred thirty (630) square feet.~~

~~c. Height of letters are limited to forty eight inches (48").~~

~~d. The sign shall not project more than thirty inches (30") from any facade or canopy and shall not be higher than the top of the building.~~

~~e. Health club may have three (3) building/entrance signs: two (2) on the building and one at the main entrance.~~

~~6. Hotel Signage:~~

DRAFT

~~a. Top of the building (north side): Up to one hundred forty (140) square feet.~~

~~b. Top of the building (south side): Up to sixty five (65) square feet.~~

~~c. Porte-cochere signage: Up to one hundred forty five (145) square feet.~~

~~d. Ground sign: Up to three (3) square feet.~~

~~7. Condominium Signage:~~

~~a. Entrance Signage: The primary and secondary entrances may each have the following signage:~~

~~(1) Gross surface area shall be no more than two (2) times the number of linear feet in the length of the building wall facing a public street.~~

~~(2) Height of letters are limited to thirty six inches (36").~~

~~(3) The signs shall not project more than thirty inches (30") from any facade or canopy and shall not be higher than structure height.~~

~~b. Parking Signage For Condominiums:~~

~~(1) Limited to thirty (30) square feet.~~

~~8. Location Of Signs: Except for signs authorized in subsection D2 of this use, no ground sign may be closer than ten feet (10') from any lot line and no sign may be closer than three feet (3') from a driveway or parking area.~~

~~E. Landscaping: The following provisions shall govern requirements for landscaping notwithstanding the provisions of subsections 13-12-4B and C of this title:~~

~~1. Screening And Landscaping: The following landscaped and planted areas shall be provided and maintained for all parking areas:~~

~~a. Front Yards: Permanent screening at least two feet (2') in height shall be installed in front yard areas adjacent to parking areas. This screening may consist of a planted earth berm, shrubs or trees, or a combination of both.~~

~~b. Side And Rear Yards: Permanent peripheral screening at least two feet (2') in height shall be installed in side and rear yards adjacent to parking areas. This screening may consist of a planted earth berm, shrubs or trees, or a combination of both.~~

~~2. Lot Area: Landscaped areas shall occupy not less than ten percent (10%) of the total lot area.~~

Public utility, governmental service and transportation uses:

Bus turnarounds and passenger shelters.

Emergency warning system structures.

Fire and police stations.

Schools - nonresidential, postbaccalaureate school, provided that not more than twenty percent (20%) of the course offerings may be prerequisite to admission to the postbaccalaureate programs.

Sewage and stormwater lift stations.

Telephone exchanges, transmission buildings and equipment, and outdoor telephone booths and pedestals.

Water filtration plants, wells, pumping stations and reservoirs. (Ord. G-60, 3-22-1966; Ord. G-710, 12-10-2002; Ord. G-827, 1-23-2007; Ord. G-914, 1-12-2010; Ord. G-1074, 4-12-2016; Ord. G-1163, 4-28-2020)

13-10E-3: LOT AREA REQUIREMENTS:

A. Floor Area Ratio: Not to exceed 0.8.

B. Structure Height: Not to exceed one hundred eighteen feet (118') or eight (8) stories in height, whichever is less.

C. Yards:

1. Front: Not less than sixty feet (60') in depth, except: a) when adjacent to a residence district boundary line not less than one hundred fifty feet (150') in depth; and b) when abutting 22nd Street or York Road not less than one hundred feet (100') in depth.

2. Side: Not less than thirty feet (30') in depth, except: a) that portion of a side yard abutting a residence district shall be not less than one hundred fifty feet (150') in depth; b) a side yard abutting a street shall be not less than forty feet (40') in depth; and c) a side yard abutting 22nd Street or York Road shall be not less than one hundred feet (100') in depth.

3. Rear: Not less than forty feet (40') in depth, except that portion of a rear yard abutting a residence district shall be not less than one hundred feet (100') in depth and except that a rear yard abutting an alley or service drive may be reduced by twenty feet (20') in depth. (Ord. G-60, 3-22-1966)

13-10E-4: ADDITIONAL REGULATIONS:

A. Awnings, Marquees And Signs: See chapter 11 of this title.

B. Off Street Parking And Loading: Off street parking and loading shall be as provided in chapter 12 of this title. (Ord. G-60, 3-22-1966; Ord. G-619, 9-22-1998; Ord. G-695, 3-26-2002)

DRAFT

CHAPTER 12

OFF STREET PARKING AND LOADING

SECTION:

13-12-1 : Scope Of Regulations

13-12-2 : Permissive Parking And Loading Facilities

13-12-3: Off Street Parking Regulations

13-12-4 : Design And Maintenance

13-12-5 : Off Street Parking Spaces

Required 13-12-6: Handicap Parking

13-12-7 : Off Street Loading Regulations

13-12-8 : Parking For Damaged Or Destroyed Uses

13-12-1 : SCOPE OF REGULATIONS:

The off street parking and loading provisions of this chapter shall apply as follows, subject to the restrictions set forth in section 13-12-3 of this chapter:

A. Accessory off street parking and off street loading facilities shall be provided as required by the regulations of this chapter for all uses and structures established in each district after the effective date hereof. However, where a building permit has been issued prior to the effective date hereof, and construction is begun within ninety (90) days after such effective date and diligently prosecuted to completion, parking and loading facilities as required for the issuance of said building permit may be provided in lieu of any different amounts required by this chapter.

B. When the intensity of use of any structure or premises is increased through the addition of dwelling units, gross floor area or seating capacity parking and loading facilities for the addition shall be provided in the amount specified herein.

C. Whenever the existing use of a structure shall hereafter be changed to a new use, parking or loading facilities shall be provided as required for such new use. However, if the said structure was erected prior to the effective date hereof, additional parking or loading facilities are mandatory only in the amount by which the requirements for the new use would exceed those for the existing use, if the latter were subject to the parking and loading provisions of this chapter.

D. The design and engineering for all new or modifications to existing parking and loading facilities shall be approved by the village engineer prior to construction. (Ord. G-687, 10-23-2001)

13-12-2 : PERMISSIVE PARKING AND LOADING FACILITIES:

Nothing in this chapter shall be deemed to prevent the voluntary establishment of off street parking and loading facilities to serve any existing uses or structures, provided that all regulations herein governing the location, design, and operation of such facilities are followed. (Ord. G-687, 10-23-2001)

13-12-3 : OFF STREET PARKING REGULATIONS:

A. Existing Parking Facilities: Accessory off street parking facilities in existence on the effective date hereof and located on the same lot as the structure or use served shall not hereafter be reduced below the requirements for a similar new structure or use under the provisions of this chapter.

B. Location: After the effective date hereof, all off street parking spaces shall be located on the same lot as the building, structure or use of land served; however, off street parking spaces may also be located on a lot other than the lot on which the building, structure or use of land served is located, provided that said spaces are also within five hundred fifty feet (550') walking distance of such building, structure, or use of land. All off street parking spaces required for single-family residences shall be located on the same lot as the residence, provided that no required spaces may be located in any front or side yard.

C. Size And Aisles: Each required off street parking space shall have a width and length, exclusive of access drives or aisles, ramps, columns, or office and work areas in accordance with standards set forth below. Enclosed parking spaces shall have a vertical clearance of at least seven feet (7'). Each required off street parking space shall open directly upon an aisle or driveway of a width and design in accordance with standards set forth below:

MINIMUM STANDARDS OF PARKING SPACES, AISLES AND PARKING BAYS FOR PARKING ACCESSORY TO NONOFFICE USES

45°	9'0"	12'9"	19'1"	12'0"	50'2"
60°	9'0"	10'5"	20'1"	17'0"	57'2"
75°	9'0"	9'4"	19'9"	22'0"	61'6"
90°	9'0"	9'0"	18'0"	27'0"	63'0"

Minimum Space Per Car:			Width 9'0" Length 18'0"		
	Parking Space And Aisle Dimensions:			Width Of Parking Bays[1]	
Angle Of Parking	Width Of Space Feet And Inches	Width Of Space Parallel To Aisle, Feet And Inches	Depth Of Space Perpendicular To Aisle, Feet And Inches	Width Of Aisle Feet And Inches	Head-In To Curb Feet And Inches

MINIMUM STANDARDS OF PARKING SPACES, AISLES AND PARKING BAYS FOR PARKING ACCESSORY TO OFFICE AND HOTEL USES

Minimum Space Per Car:			Width 8'6" Length 17'6"		
	Parking Space And Aisle Dimensions:			Width Of Parking Bays[2]	
Angle Of Parking	Width Of Space Feet And Inches	Width Of Space Parallel To Aisle, Feet And Inches	Depth Of Space Perpendicular To Aisle, Feet And Inches	Width Of Aisle Feet And Inches	Head-In To Curb Feet And Inches
45°	8'6"	12'0"	18'5"	12'0"	48'10"
60°	8'6"	9'10"	19'5"	16'0"	54'10
75°	8'6"	8'10"	19'1"	20'0"	58'2"
90°	8'6"	8'6"	17'6"	24'0"	59'0"

D. Timing Of Construction: All required off-street parking shall be constructed in accordance with the design criteria of this chapter and shall be improved and ready for use as a condition of occupancy for the structure, issuance of additional permits or use of land. However, the property owner may request approval from the ~~d~~Director ~~of community D~~development Services, to initially construct no less than seventy five percent (75%) of the required parking as a condition of occupancy with the remaining required spaces to be set aside and constructed when the parking demands for the site as determined by the village,

require the construction of the set aside parking spaces. Prior to occupancy, a written covenant agreeing to construct the set aside parking spaces shall be submitted to the village for review and approval. Once approved, this document shall be filed for recording in the office of the county recorder of deeds and shall run with the parcel of land.

E. Access: All off-street parking facilities shall be provided with appropriate means of vehicular access to a street in accordance with regulations set forth below:

ACCESS DRIVEWAYS FROM STREETS TO

OFF-STREET PARKING AND LOADING SPACES

1. Width of driveways (measured at the lot line adjoining a street):

a. Residential Uses: Not less than nine feet (9') wide or more than twenty feet (20') wide.

b. Nonresidential Uses:

(1) Not less than twelve feet (12') wide or more than twenty two feet (22') wide for a one-way driveway.

(2) Not less than twenty two feet (22') wide or more than twenty five feet (25') wide for a two-way driveway serving twenty (20) or fewer parking spaces or one loading berth.

(3) Not less than:

(A) Twenty four feet (24') wide or more than thirty eight feet (38') wide for a two-way driveway (2 lanes out and 1 lane in) without a median; or

(B) Twenty four feet (24') wide or more than forty four feet (44') wide for a two-way driveway (2 lanes out and 1 lane in) with a median, serving more than twenty (20) parking spaces or two (2) or more loading berths.

2. Radius connecting street pavement edge and driveway edge:

a. In Residential Districts: Not less than two feet (2').

b. In All Other Districts: Not less than fifteen feet (15').

3. Angle at intersection of a driveway and street: The acute angle formed at the intersection of driveway and street pavement edges shall be not less than sixty degrees (60°). The required turning angle for a vehicle entering or leaving a driveway shall not exceed ninety degrees (90°).

4. Spacing between separate driveway entrances on a lot (measured center to center at the lot line adjoining a street): no less than forty percent (40%) of the length of the lot line adjoining the street, or four hundred feet (400'), whichever is less.

DRAFT

5. On corner lots, spacing between driveway entrance and right- of-way line of an adjacent intersecting street (measured from the nearest edge of the driveway pavement at its intersection with the street pavement to the nearest right-of-way line, extended, of an adjacent intersecting street): no less than twenty percent (20%) of the length of the lot line adjoining the street being entered.

F. Use: Accessory off-street parking facilities, as accessory to specific uses listed in this chapter, shall be solely for the parking of automobiles of patrons, occupants or employees. When bus transportation is provided for patrons, occupants or employees of a specific establishment, additional open or enclosed off-street parking spaces for bus parking on the premises shall be provided in accordance with all other regulations set forth in this chapter.

G. Computation: When determination of the number of off-street parking spaces required by this chapter results in a requirement of a fractional space, any fraction of one-half (1/2) or less may be disregarded while a fraction in excess of one-half (1/2) shall be counted as one parking space.

H. In Yards: Off-street parking spaces, open to the sky, in nonresidential districts, may be located in required interior side yards and rear yards, no less than ten feet (10') from the nearest lot line, except a parking area containing four (4) or more parking spaces shall be not less than forty feet (40') from an adjoining residence district boundary; provided, however, that:

1. On any lot in a B1 local shopping center district and a B3 general business district, the required off-street parking spaces may be located in a front yard or side yard adjoining a public street not less than ~~ten~~ forty feet (40') from ~~a street~~ the property line;

2. On any lot in ORA1 or ORA2 office-research-assembly district and an O3 or O4 office district, not more than ten percent (10%) of the required off-street parking spaces, not to exceed six (6) spaces, may be located in a required front yard or along the side of the building adjoining the street and not less than ~~twenty five~~ forty feet (~~25~~40') from ~~a street line~~ the property line or fifty feet (50') from the ~~street lines~~ right-of-way line of ~~Cermak~~ 22nd Street and York Road; and

3. On any lot in an ORA3 office-research-assembly district, the location of off-street parking spaces shall be controlled by subsection 13-10C-4E of this title and not the provisions of this subsection H.

I. Parking Of Certain Commercial Vehicles And Equipment In Residence Districts Prohibited: No motor vehicle bearing ambulance, funeral home, livery, taxi or tow truck state license plates shall be stored or parked on any lot in any residence district, unless such motor vehicle(s) is wholly enclosed in a building or such vehicle is being used in connection with a legitimate service actually being rendered for the benefit of such lot. No motor vehicle having a gross vehicle weight (including vehicle and attached equipment and maximum load) 3 in excess of eight thousand (8,000) pounds, except vehicles registered as recreational vehicles under the Illinois motor vehicle code, and no contractor's equipment, supplies or tools, shall be stored or parked on any lot in any residence district, unless:

1. Such vehicle, equipment, supplies or tools are wholly enclosed within a building; or

2. Such vehicle, equipment, supplies or tools are being used in connection with a legitimate service actually being rendered for the benefit of such lot.

J. Collective Provision: Off-street parking facilities for separate uses located in a principal building on a single parcel may be provided collectively if the total number of spaces so provided is not less than the sum of the separate requirements for each such use and provided that all regulations governing location of accessory parking spaces, in relation to the use served, are adhered to. In addition, any parcel of land that has excess parking beyond what is required by this chapter may allocate excess parking capacity to any parcel or use that is directly contiguous to it under a shared parking arrangement if it meets the applicable requirements of this chapter. Such arrangement must be in written form with notification provided to the village.

K. Control Of Off-Street Parking Facilities: In cases where parking facilities arepermitted on a lot other than the lot on which the structure or use served is located, a covenant running with the land must be recorded in the office of the recorder of deeds of DuPage County, Illinois, on the lot upon which the accessory off-street parking is located which prohibits any other use on that lot, and a copy of the recorded covenant certified by the office of the recorder of deeds of DuPage County, Illinois, shall be deposited with the ~~d~~Director of ~~community d~~Development Services. The covenant shall not be released until such time as either one of the following conditions occurs:

1. The structure on the lot containing the principal use is removed and the principal use terminated.

2. Another lot of the required size within the required distance is properly developed and used for the required accessory off- street parking in place of and in lieu of the initial lot used for accessory off-street parking with the same requirements, covenants, and conditions attaching to such substitute accessory use lot as approved by the same authority as required for approval of such initial lot.

L. Employee Parking: Parking spaces required on an employee basis shall be based on the maximum number of employees on duty or residing, or both, on the premises at any one time.

M. Repair And Service: Except in cases of emergency, no motor vehicle repair work or service of any kind shall be permitted in off-street parking areas. No gasoline or motor oil shall be sold or services performed in conjunction with any accessory parking facilities unless such facilities are located within a completely enclosed structure, in which case gasoline and motor oil may be sold within such structure to the users of such facilities, provided that no sign thereto is visible from outside the structure and provided further that all gasoline pumps shall be effectively screened from view of streets and residence districts. (Ord. G-687, 10-23-2001; Ord. G-758, 8-24-2004)

N. Shared Parking Reductions – Mixed-Use Developments: Cumulative parking requirements for mixed-use occupancies may be reduced where it can be determined

that the peak requirement of the several occupancies occurs at different times during the day. The Shared Parking Report, January 1995, 2nd Edition, published by the Urban Land Institute may be used as a guideline in the estimation of parking demand. For a shared parking arrangement, the Director of Development Services may make an administrative adjustment that reduces the off-street parking requirements for each participating commercial property by a maximum of 15%.

Notes

1 1. Parking bay consists of 2 rows of parking spaces and 1 aisle.
2 1. Parking bay consists of 2 rows of parking spaces and 1 aisle.
3 1. Equivalent to Illinois motor vehicle registration class C and higher, second division vehicles.

13-12-4 : DESIGN AND MAINTENANCE:

A. Surfacing: Except in the R1 and R2 single-family residential zoning districts where off street parking areas can be either stone or hard surfaced, all off street parking areas shall be improved with an all weather hard surface pavement installed in accordance with the village of Oak Brook public works construction standards.

~~B. Screening And Landscaping: The following landscaped and planted areas shall be provided and maintained for all parking areas:~~

~~1. Front Yards: Permanent screening at least four feet (4') high shall be installed in front yard areas adjacent to parking areas. This screening may consist of a planted earth berm, densely planted shrubs or trees, or a combination of both.~~

~~2. Side And Rear Yards: Permanent peripheral screening at least five feet (5') high shall be installed in side and rear yards adjacent to parking areas. This screening may consist of a planted earth berm, densely planted shrubs or trees, or a combination of both. In side and rear yards, the screening shall be so located and constructed as not to interfere or conflict with the use of any utility easements or utility installations existing or planned to be installed in these easement areas.~~

~~C. Interior Parking Lot Landscaping: Landscaped areas shall occupy not less than ten percent (10%) of the total lot area excluding:~~

~~1. The building footprint or footprint of other structures,~~

~~2. All required front yard or street setback areas, and~~

~~3. Any required landscape areas along rear lot lines.~~

~~In parking areas which are wider than one bay of double parking, interior shade trees shall be planted with a maximum spacing of forty feet (40'), provided that at least one tree is located in the area occupied by every fifteen (15) interior parking spaces. Landscaped~~

~~dividers with a minimum width of six feet (6') shall be provided between every three (3) parking bays. Individual permanent planter areas (minimum size of 8 feet 6 inches by 17 feet) are required for interior trees with a minimum caliper of three inches (3"), which shall be of a variety which do not drop a messy fruit (see village of Oak Brook public works construction standards for list of appropriate trees).~~

~~D~~B. Landscape Plans: Complete detailed landscaping plans shall be submitted for approval showing type, Latin and common names, size and location of planting material, in accordance with the requirements and standards of Chapter 18.

~~E~~C. Lighting: Illumination of an off street parking area shall be arranged so as not to project direct rays of light or glare into any roadway or adjacent property. Intensity of illumination of parking areas shall be in accordance with the village of Oak Brook public works construction standards. All lighting for business and office uses adjacent to residential districts shall be extinguished or reduced in intensity, not later than thirty (30) minutes after the close of business of the use being served.

~~F~~D. Disposal Of Storm Water: Adequate provision shall be made for the management of storm water in accordance with village standards so that such water shall not flow into adjacent property or onto or across sidewalks in a quantity or manner that would be detrimental thereto or inconvenient to persons using the sidewalks.

~~G~~E. Permanent Curbing: Continuous permanent concrete curbing conforming to the village of Oak Brook public works construction standards shall be provided adjacent to all driveway, loading and parking pavement associated with nonresidential uses.

~~H~~F. Striping And Traffic Circulation: Parking spaces shall be delineated by a single white or yellow line. For one-way movements along aisles and driveways, direction of movement shall be indicated by pavement markings or directional signs or both as determined by the village.

~~I~~G. Pedestrian Safety: In order to ensure pedestrian safety, where parking stalls are not aligned perpendicular to the primary pedestrian objective or where pedestrians will be required to cross parking aisles, a pedestrian walkway at least five feet (5') wide and clearly indicated by pavement markings shall be provided at intervals not to exceed two hundred feet (200').

~~J~~H. Parking Structures:

1. ~~Landscaping And Screening: All parking structures shall be landscaped (which includes 1 or more berms) pursuant to a landscape plan prepared by a landscape architect to screen substantially the first level from adjacent streets and other uses. For any parking structure that is four (4) floors or less in height, the landscaped area must be a minimum of ten feet (10') in depth but must average fifteen (15) in depth for all screening. For any parking structure that is in excess of four (4) floors, the landscaped area must be a minimum of twenty feet (20') in depth. Any approved landscape plan required for screening of a parking structure must incorporate evergreens within the plantings and include a maintenance schedule to ensure that any damaged or dead trees, shrubs or ground cover~~

~~shall be replaced promptly. Regular maintenance of these landscaped areas shall also be required.~~

~~2~~1. Architecture/Design: All exterior walls of such structures, which are visible from adjacent roadways, shall be finished with a material to maintain a "common architectural character", as defined in section 13-8-4 of this title, with the principal building. Maintaining common architectural character between the parking structure and the principal building(s) shall be judged in terms of: building form and materials; the pattern, size, shape, and number of window openings; the glazing or screening of window openings; and surface treatments such as cornices, moldings, reveals and sills.

~~3~~2. Lighting: Parking structures with light standards on the top floor of the structure shall be located in the center aisle of the deck and shall be of appropriate design and scale. Low profile lighting should be used around the perimeter of the parking structure and all internal/external light sources shall be properly screened from view to minimize glare on adjacent property. (Ord. G-687, 10-23-2001)

3. Setbacks: For any parking structure that abuts a residential use/zoning district the setbacks shall be ten feet (10') plus two feet (2') for every one foot (1') in height above grade, up to a maximum setback of one hundred feet (100') for the parking structure. (Also see landscape setback requirements in Chapter 18)

DRAFT

13-12-5 : OFF-STREET PARKING SPACES REQUIRED:

There shall be provided for each structure and use hereafter erected, structurally altered, or enlarged, a minimum number of off-street parking spaces in accordance with the following:

Dwelling And Lodging Uses:

Hotels	1 parking space for each lodging room, 1 parking space for each dwelling unit, and 1 parking space for each 100 square feet of retail sales, meeting area and dining area.
Single-family ~~attached and~~ (detached) ~~dwellings~~	2 ~~parking~~ spaces for each dwelling ~~unit~~.
Duplex and Townhomes (attached)	2 spaces for each dwelling.
Condominium and Apartments	2 spaces for each dwelling.
Assisted living units	0.5 parking spaces per dwelling unit.

Theaters, Schools, Institutions, Auditoriums Or Other Places Of Assembly:

Churches, chapels, temples and synagogues	1 parking space for each 4 seats.
Clubs, lodges and fraternal organizations	1 parking space for every 100 square feet of floor space, or part thereof.
Colleges, universities and fine art schools	For classroom and administration buildings, 1 parking space for each 2 employees who are required to work during hours of normal operation, plus 1 parking space for each 3 students, in accordance with designed seating capacity of classroom facilities.
Gymnasiums, stadiums, meeting halls, convention and exhibition halls	1 parking space for each 4 seats in accordance with designed seating capacity.
Hospitals	1 parking space for every 500 square feet of floor area, or part thereof.
Libraries, museums and art galleries	1 parking space for every 500 square feet of floor area, or part thereof.
Sanitariums, health resorts, institutions for the aged, daycare centers, and nursing homes	1 parking space for every 1,000 square feet of floor area plus 1 space for every employee. Adequate stacking will also be provided for drop-off areas per the review and approval of the village engineer.
Schools:	
Commercial or trade, music, dance and business	1 parking space for every 250 square feet of floor area, or part thereof.
High	1 parking space for each 6 students, plus 1 parking space for each faculty member and other full-time and part- time employees.
Elementary and junior high	1 parking space for each faculty member, plus 1 for each other full-time employee.
Theaters, auditoriums and other places of public assembly accessory	to schools and other institutional establishments

DRAFT

Recreation Uses, Commercial Or Noncommercial:

Bowling alleys and arcades of floor area, or part thereof.	1 parking space for each 2.5 seats.
Golf courses	60 parking spaces for every 9 holes plus 1 parking space for each 250 square feet devoted to retail sales, restaurant use or meeting space.
Health salons and skating rinks, commercial	1 parking space for every 200 square feet
Parks, playgrounds, outdoor and indoor recreation	1 parking space for every 100 square feet of floor area, or part thereof.
	1 parking space for every 10,000 square feet of area.
Swimming pools, commercial	1 parking space for every 75 square feet of surface water area when filled.

Business, Commercial And Industrial Use:

DRAFT

13-12-5 : OFF-STREET PARKING SPACES REQUIRED:

There shall be provided for each structure and use hereafter erected, structurally altered, or enlarged, a minimum number of off-street parking spaces in accordance with the following:

Dwelling And Lodging Uses:	
Hotels	1 parking space for each lodging room, 1 parking space for each dwelling unit, and 1 parking space for each 100 square feet of retail sales, meeting area and dining area.
Single-family ~~attached and~~ (detached) ~~dwellings~~	2 ~~parking~~ spaces for each dwelling ~~unit~~.
Duplex and Townhomes (attached)	2 spaces for each dwelling.
Condominium and Apartments	2 spaces for each dwelling.
Assisted living units	0.5 parking spaces per dwelling unit.
Theaters, Schools, Institutions, Auditoriums Or Other Places Of Assembly:	
Churches, chapels, temples and synagogues	1 parking space for each 4 seats.
Clubs, lodges and fraternal organizations	1 parking space for every 100 square feet of floor space, or part thereof.
Colleges, universities and fine art schools	For classroom and administration buildings, 1 parking space for each 2 employees who are required to work during hours of normal operation, plus 1 parking space for each 3 students, in accordance with designed seating capacity of classroom facilities.
Gymnasiums, stadiums, meeting halls, convention and exhibition halls	1 parking space for each 4 seats in accordance with designed seating capacity.
Hospitals	1 parking space for every 500 square feet of floor area, or part thereof.
Libraries, museums and art galleries	1 parking space for every 500 square feet of floor area, or part thereof.
Sanitariums, health resorts, institutions for the aged, daycare centers, and nursing homes	1 parking space for every 1,000 square feet of floor area plus 1 space for every employee. Adequate stacking will also be provided for drop-off areas per the review and approval of the village engineer.
Schools:	
Commercial or trade, music, dance and business	1 parking space for every 250 square feet of floor area, or part thereof.
High	1 parking space for each 6 students, plus 1 parking space for each faculty member and other full-time and part- time employees.
Elementary and junior high	1 parking space for each faculty member, plus 1 for each other full-time employee.
Theaters, auditoriums and other places of public assembly accessory to schools and other institutional establishments	1 parking space for each 2.5 seats.
Recreation Uses, Commercial Or Noncommercial:	
Bowling alleys and arcades of floor area, or part thereof.	1 parking space for every 200 square feet
Golf courses	60 parking spaces for every 9 holes plus 1 parking space for each 250 square feet devoted to retail sales, restaurant use or meeting space.
Health salons and skating rinks, commercial	1 parking space for every 100 square feet of floor area, or part thereof.
Parks, playgrounds, outdoor and indoor recreation	1 parking space for every 10,000 square feet of area.
Swimming pools, commercial	1 parking space for every 75 square feet of surface water area when filled.

Business, Commercial And Industrial Use:

Appliance stores, motor vehicle sales establishments and establishments for repair of household equipment and furniture	1 parking space for every 200 square feet of floor area or part thereof.
Car wash (full service)	1 parking space for each 1.5 employees plus 20 stacking spaces.
Car wash (not full service including self-service)	1 parking space for each 1.5 employees plus 10 stacking spaces for vehicles that can be accommodated at full occupancy.
Automobile service stations	1 parking space for each island of gasoline pumps, plus 2 for each service bay.
Banks and other financial institutions	1 parking space for every 250 square feet of floor area, or part thereof.
Barbershops and beauty parlors	3 parking spaces for each operator's chair.
Furniture stores	1 parking space for every 400 square feet of floor area or part thereof. As used in this listing, "furniture store" shall mean establishments classified under standard industrial classification (SIC) 5712 as primarily engaged in the retail sale of household furniture with only incidental sales of: A. Floor coverings; B. Draperies, curtains and upholstery materials; C. Miscellaneous home furnishings; and D. Consumer audio and video electronic equipment but only as part of "home entertainment centers" which contain furniture as well as electronic components, but no significant sale of any other products or materials.
Manufacturing, fabricating, processing, storing, cleaning, testing, assembly, repairing and service establishments (as permitted in office-research-assembly districts)	1 parking space for each 1.5 employees as related to the working period when the maximum number of persons are employed on the premises, or 1 for each 800 square feet of floor area, whichever is greater.
Medical and dental clinics and offices of physicians and dentists	1 space for each 200 square feet of floor area.
Offices, business, professional, administrative and public (other than medical and dental clinics, and offices of physicians and dentists)	1 parking space for each 300 square feet of floor area.
Public utility, governmental service and transportation uses	1 parking space for each 2 employees.
Restaurants with a drive-through in an ORA-2 zoning district located within 1,000 feet of office buildings containing a minimum aggregate of 250,000 square feet at the time of initial restaurant construction	1 parking space for every 100 square feet of floor area.
Restaurants, with drive-through	1 parking space for every 66 $^{2}/_{3}$ feet of floor area.
Restaurants, without drive-through	1 parking space for every 100 square feet of floor area, or part thereof.
Theaters, except open air drive- ins	1 parking space for each 2.5 seats.
Undertaking establishments and funeral parlors	1 parking space for each 100 square feet of floor area.

Warehouse, storage, wholesale and mail order establishments	4 plus 1 parking space for each 1,500 square feet of floor area over 4,500 square feet, or 1 parking space for each 1.5 employees, whichever is greater.

B2 Regional Shopping Center Districts:

With a lot area of not more than 40 acres	Parking spaces and aisles not less in area than $2^1/_4$ times the floor area of buildings constructed.
With a lot area of 40 acres to 60 acres	Not less in area than $1^7/_8$ times the gross floor area of buildings constructed.
With a lot area of 60 acres or more	Not less in area than **1** $/_2$ times the gross floor area of buildings constructed

~~Determination Of Unspecified Offstreet Parking Facilities:~~

For permitted or special uses not listed above, the ~~community development director~~ Development Services Director shall determine the required number of off street parking spaces by comparing the proposed use against the most similar use listed in this title and requiring that particular parking ratio.

(Ord. G-687, 10-23-2001; Ord. G-758, 8-24-2004)

13-12-5 : HANDICAP PARKING:

~~See chapter 11 of this title. (Ord. G-687, 10-23-2001; Ord. G-695, 3-26-2002)~~

Accessible Parking Required: All facilities, which provide parking, shall provide accessible parking in compliance with the Sections 208 & 502 of the Illinois Accessibility Code of the Capital Development Board, as adopted, and of the Federal Americans with Disabilities Act.

13-12-6 : OFF STREET LOADING REGULATIONS:

There shall be provided off street loading berths not less than the minimum requirements specified in this section in connection with any structure which is to be erected or substantially altered, and which requires the receipt or distribution of materials or merchandise by trucks or similar vehicles in accordance with the following:

A. Location:

1. In all O districts, all accessory off street loading berths shall be on the same lot as the principal use and they shall face only interior lot lines. Open off street loading berths shall be located only at the rear of the building and shall be not less than one hundred feet (100') from an adjoining residence district boundary and such off street loading berths shall be effectively screened therefrom by a wall or fence, of architectural design consistent with the principal building on the lot, not less than six feet (6') nor more than eight feet (8') in height additionally screened by a planted earth berm, densely planted shrubs or trees, or a combination of both.

2. In the B2 zoning district, off street loading berths may face perimeter or boundary streets if said loading berths are screened by a stone or masonry wall at least eight feet (8') in height. No off street loading berths shall be permitted within five hundred feet (500') of a boundary street, unless such loading berths are screened and are located at the rear of the building.

3. In B1, B3 and B4 zoning districts, all loading berths shall be at the rear of the building facing an interior lot line. If the rear of the building faces a lot line fronting on a street, loading berths shall be enclosed by a wall of at least eight feet (8') high or shall be completely enclosed within a building. Where the rear of the building faces a lot line which is also a residence district zoning line, loading berths shall be set back at least one hundred feet (100') from said lot line and residence district boundary, and:

a. Completely enclosed within a building, or

b. Enclosed by a wall or fence not less than six feet (6') nor more than eight feet (8') in height, or

c. Effectively screened by a planted earth berm, densely planted shrubs or trees, or a combination of both.

B. Size: Unless otherwise specified in this title, a required off street loading berth shall be at least twelve feet (12') in width and at least fifty five feet (55') in length, exclusive of access drives, aisles, ramps, maneuvering space, columns, office and work areas, and shall have a vertical clearance of not less than fourteen feet (14').

C. Access: Each required off street loading berth shall have an adjacent open paved area, other than a street or public way, of adequate size and so located as to provide for all required maneuvering for truck access to the loading berth. Such areas and related access drives shall be in accordance with the regulations set forth in subsections 13-12-3C and E of this chapter and other applicable sections of this title and shall provide sufficient and adequate width and radii for a fifty five foot (55') long tractor semitrailer combination.

D. Surfacing: All open off street loading berths, access drives, aisles, and maneuvering spaces shall be improved in accordance with the village of Oak Brook public works construction standards.

E. Repair And Service: No storage of any kind nor motor vehicle repair work or service of any kind shall be permitted within any required loading berth.

F. Use: Space allocated to any off street loading berth shall not, while so allocated, be used to satisfy the space requirements for any off street parking facilities or portions thereof.

G. Required Berths:

1. The minimum number of off street loading berths accessory to office uses hereafter erected, structurally altered or enlarged in all business and office-research-assembly districts shall be in accordance with the following schedule:Floor Area Of Establishments (Square Feet)	Required Number
5,000 to 25,000	1
25,001 to 200,000	2

DRAFT

For each additional 200,000 square feet of floor area, or fraction thereof, over 200,000 square feet of gross floor area: 1 additional loading berth.

2. The minimum number of off street loading berths accessory to nonoffice uses hereafter erected, structurally altered, or enlarged in all business and office-research- assembly districts shall be in accordance with the following schedule:

Floor Area Of Establishments (Square Feet)	Required Number
5,000 to 25,000	1
25,001 to 40,000	2
40,001 to 100,000	3

For each additional 100,000 square feet of floor area, or fraction thereof, over 100,000 square feet of floor area: 1 additional loading berth. (Ord. G-687, 10-23-2001; Ord. G-750, 6-8-2004)

13-12-7 : PARKING FOR DAMAGED OR DESTROYED USES:

When any conforming or nonconforming use or structure which is in existence on the effective date hereof is restored and continued in operation after being damaged or destroyed by fire, collapse, explosion or other cause, to the extent that the cost of restoration does not exceed fifty percent (50%) of the assessed valuation, not less than the off street parking or loading facilities equivalent to any maintained at the time of such damage or destruction must be provided. However, in no case shall it be necessary to restore or maintain parking or loading facilities in excess of those required by this chapter for equivalent new uses or construction. (Ord. G-687, 10-23-2001)

DRAFT

CHAPTER 13
NONCONFORMING BUILDINGS, STRUCTURES AND USES

SECTION:

13-13-1: Purpose

13-13-2: Authority To Continue

13-13-1: PURPOSE:

The purpose of this Chapter is to provide for the regulation of nonconforming uses, buildings and structures, and to specify those circumstances and conditions under which those nonconforming buildings, structures and uses shall be eliminated. (Ord. G-60, 3-22-1966; Ord. G-575, 9-24-1996)

13-13-2: AUTHORITY TO CONTINUE:

Any building, structure or use which existed lawfully at the time of the adoption of this Title, and which remains or becomes nonconforming upon the adoption of this Title, or of any subsequent amendment thereto, may be continued only in accordance with the following regulations:

A. Repairs And Alterations: Ordinary repairs and alterations may be made to a nonconforming building or structure, provided that no structural alterations shall be made in or to such building or structure, all of which is designed or intended for a use not permitted in the district in which it is located, except those required by law, or except to make the building or structure and use thereof conform to the regulations of the district in which it is located. Ordinary repairs and alterations shall be determined by the Director of ~~Community~~ Development Services and shall include, among other things the replacement of storage tanks where the safety of operation of the installation requires such.

B. Additions And Enlargements:

1. A nonconforming building or structure all or substantially all of which is designed or intended for a use not permitted in the district in which it is located shall not be added to or enlarged in any manner unless such nonconforming building or structure, and use thereof, is made to conform to all the regulations of the district in which it is located.

2. A nonconforming building or structure which is nonconforming only as to bulk, may be added to or enlarged, provided such additions or enlargement conforms to all regulations of the district in which it is located.

C. Moving: No building or structure shall be moved in whole or in part to any other location unless every portion of such building or structure, and the use thereof, is made to conform to all regulations of the district in which the moved building is located.

D. Restoration Of Damaged Nonconforming Buildings Or Structures: A building, structure or portion thereof, all or substantially all of which is designed or intended for a use which is not permitted in the district in which it is located, and which is destroyed or damaged by fire or other casualty or act of God to the extent that the cost of restoration to the condition in which it was before the occurrence will exceed fifty percent (50%) of the total cost of reconstructing the entire building or structure, shall not be restored unless said building or structure and the use thereof shall conform to all regulations of the district in which it is located. In the event that such damage or destruction is less than fifty percent (50%) of the cost of reconstructing the entire building or structure, no repairs or construction for restoration shall be made unless such work is started within one year from the date of the partial destruction and is diligently prosecuted to completion.

E. Discontinuance Of Use Of Nonconforming Building Or Structure: A building, structure, or portion thereof, all or substantially all of which is designed or intended for a use which is not permitted in the district in which it is located, and in which the use has ceased by discontinuance or abandonment, on the effective date of this Title or thereafter is abandoned and remains unoccupied, or is not used for a continuous period of one year, shall not thereafter be occupied or used, except by a use which conforms to the use regulations of the district in which it is located.

F. Change Of Use In Nonconforming Building Or Structure: The nonconforming use of a building or structure, all or substantially all of which is designed or intended for a use not permitted in the district in which it is located, may be changed to a use permitted in the district in which the building or structure is located.

G. Nonconforming Use Of Conforming Buildings Or Structures: The existing nonconforming use of a part or all of a conforming building or structure may be continued subject to the following provisions:

1. The nonconforming use of a part of such building or structure shall not be expanded or extended into any other portion of such building or structure, nor changed to any other nonconforming use.

2. If a nonconforming use of such a building or structure is discontinued, or abandoned for a period of six (6) consecutive months, it shall not be renewed, and any subsequent use of such building or structure shall conform to the use regulations of the district in which the premises are located.

H. Nonconforming Use Of Land: The nonconforming use of land not involving a building or structure, or in connection with which any building or structure thereon is incidental or accessory to the principal use of land, may be continued subject to the following provisions:

DRAFT

1. Such nonconforming use shall not be expanded or extended beyond the area it occupies.

2. If such a nonconforming use of land is discontinued or abandoned for a period of six (6) consecutive months, it shall not thereafter be renewed, and subsequent use of land shall conform to the regulations of the district in which the land is located.

3. No nonconforming use of land shall be changed to another nonconforming use.

4. Where the nonconforming use of land is accessory to the nonconforming use of a building or structure, it shall be discontinued on the same date on which the nonconforming use of the building or structure is discontinued. (Ord. G-60, 3-22-1966; Ord. G-368, 10-22-1985; Ord. G-568, 4-1-1996; Ord. G-575, 9-24-1996)

DRAFT

CHAPTER 14
ADMINISTRATION AND ENFORCEMENT

SECTION:

13-14-1: Director Of ~~Community~~ Development Services

13-14-2: Zoning Certificates

13-14-3: Filing Plans

13-14-4: Planning and Zoning Commission ~~Board Of Appeals~~ Jurisdiction And Authority

13-14-5: Appeals

13-14-6: Variations

13-14-7: ~~Plan Commission Jurisdiction~~

13-14-~~8~~7: Amendments

13-14-~~9~~8: Special Uses

13-14-~~10~~9: Fees

13-14-~~11~~10: Violation, Penalty And Enforcement

13-14-~~12~~11: Public Hearing Notification Requirements

13-14-1: DIRECTOR OF ~~COMMUNITY~~ DEVELOPMENT SERVICES:

The ~~director of community development~~ Director of Development Services or his/her designee shall enforce this title, and in furtherance of his/her authority shall:

A. Determine conformance of applications for building permits with regulations of this title.

B. Issue all zoning certificates, following approval as required in this title, and make and maintain records thereof.

C. Issue building permits.

D. Issue all certificates of occupancy, and make and maintain records thereof.

E. Issue permits for temporary parking and use of trailers.

F. Authorize, in writing, changes in residence districts signs that are more than six (6) square feet in area.

G. Conduct inspections of uses of land and structures in accordance with due process of law to determine compliance with the terms of this title.

H. Maintain permanent and current records of the administration and enforcement of this title, including, but not limited to, applications, processing and decisions for all amendments, variations and appeals, and chart and designate each: 1) district line amendment; and 2) special use on the zoning district map.

I. Provide and maintain a public information bureau relative to all matters pertaining to this title.

J. Receive, file and forward to the ~~zoning board of appeals~~ Planning and Zoning Commission all applications for variations, appeals of other matters on which the village board is required to act under this title.

K. Forward to the village clerk all applications initially filed with the ~~director of community development~~ Director of Development Services for amendments, and other matters necessary under this title upon which the village board of trustees is required to act.

L. Provide such clerical and technical assistance as may be required by the ~~zoning board of appeals~~ Planning and Zoning Commission in the exercise of its duties. (Ord. G-60, 3-22-1966)

13-14-2: ZONING CERTIFICATES:

A. Zoning Certificates Required:

1. Except as hereinafter provided, no permit pertaining to the use of land or permit required by building codes shall be issued by any officer, department or employee of the village, unless the applications for such permits have been examined by the ~~director of community d~~Development Services department and he has affixed thereon certifications indicating that the applications comply with the provisions of this title.

2. An application for a zoning certificate for a structure and the use thereof or a land use which requires compliance with performance standards set forth in general regulations of the office-research-assembly districts 1 shall have affixed to it the certification of an architect or a structural engineer registered in the State of Illinois. Such certification shall state that the structure and the use thereof, or the use of land when no structure is involved, complies with all provisions of this Title pertaining to such performance standards. The ~~Director of Community~~ Development Services department shall, upon receipt of such application, approve and authorize the issuance of a zoning certificate, provided there is compliance with all other provisions of this Title. Within fifteen (15) days after the date of such approval, the ~~Director of Community~~ Development Services department shall examine said application and if, in ~~his~~ their opinion, the structure and use thereof, or use of land not involving a structure, does not in fact comply with such performance standards regulations, he shall advise such architect, or structural engineer, in writing, of his findings, stating the reason or reasons therefor. Failure of the

architect or structural engineer, to submit additional information or make revisions in the application necessary to comply with performance standards within thirty (30) days of such notification shall be cause for revocation of the zoning certificate.

B. Certificate Of Occupancy:

1. No structure erected or altered hereafter shall be occupied or used in whole or in part for any purpose whatsoever until a certificate of occupancy shall have been issued by the ~~Director of Community~~ Development Services department stating that the structure complies with all the building and health laws and ordinances and with the provisions of this Title. No change of use shall be made in any structure or part thereof now or hereafter erected or altered without a permit having been issued by the ~~Director of Community~~ Development Services department, and no permit shall be issued to make such change unless it is in conformity with the provisions of this Title.

2. Nothing in this Section shall prevent the continuance of the present occupancy or use of any existing structure, except as may be necessary for the safety of life and property.

3. Application of a certificate of occupancy shall be made coincident with the application for a building permit and such certificate shall be issued within ten (10) days after the erection or alteration of such structure has been completed. A record of all certificates shall be kept on file in the office of the ~~Director of Community~~ Development Services department and copies shall be furnished on request to any person having proprietary or possessory interest in the structure affected. A fee of ten dollars ($10.00) shall be charged for each original certificate and one dollar for each copy thereof. (Ord. G-60, 3-22-1966; Ord. G-203, 12-14-1976)

Notes

1 1. See Section 13-10-3 of this Title.

13-14-3: FILING PLANS:

All applications for zoning certificates and building permits shall be accompanied by plans in triplicate, including landscaping plans ~~where required in ORA and O3~~ as required by this Title, drawn to scale, not less than one foot equal to one-tenth of an inch (1/10" = 1'), showing the actual shape and dimensions of the lot to be built upon, the exact size, area and location of the lot, of the structures and accessory structures existing, and the lines within which the structure shall be erected or altered, the existing and intended use of each structure or part thereof, the number of dwelling units or lodging rooms a residential structure is designed to accommodate, the design and location of off-street parking facilities, vehicular drives, and outdoor lighting, and such other information with regard to the lot and neighboring lots and performance standards as may be necessary to determine

DRAFT

and provide for the enforcement of this Title. Applications involving single-family attached and semi-detached dwellings and multiple-family dwellings shall also be accompanied by architectural drawings showing all elevations and indicating building materials to be used on the exterior of the structure. (Ord. G-60, 3-22-1966)

13-14-4: PLANNING AND ZONING COMMISSION ~~BOARD OF APPEALS~~ JURISDICTION AND AUTHORITY 1 :

A. The Planning and Zoning Commission ~~Board of Appeals~~ is hereby designated as the proper commission or committee to publish notices as required by statute and these zoning regulations pertaining to proposed amendments to this Title and to make a written report and recommendation to the Board of Trustees on any such proposed amendment.

B. The Planning and Zoning Commission ~~Board of Appeals~~ is hereby invested with the following authority and jurisdiction:

1. To hear and decide appeals from any order, requirement, decision or determination made by the Director of ~~Community~~ Development Services or other authorized officials of the Village having jurisdiction under this Title.

2. To hear applications for variations from the terms provided in this Code in the manner and subject to the standards set forth in this Chapter.

3. To hold public hearings in matters pertaining to applications for planned developments, amendments and special uses.

4. To hear all other matters referred to it or upon which it is required to pass under this Title.

5. To consider applications for Subdivision as detailed in Title 14 of the Village Code.

~~5~~ 6. Submit reports to the Board of Trustees setting forth its findings and recommendations in the manner prescribed in this Chapter. (Ord. G-60, 3-22-1966; Ord. G-116, 4-14-1970)

~~Notes~~

~~1 1. See Title 2, Chapter 8 of this Code for the Zoning Board of Appeals.~~

13-14-5: APPEALS:

A. Authority: The Planning and Zoning Commission ~~Board of Appeals~~ shall hear and decide appeals from an administrative order, requirement, decision or determination

made by the Director of ~~Community~~ Development Services or other authorized official of the Village having jurisdiction under this Title.

B. Initiation:

1. An appeal to the Planning and Zoning Commission ~~Board of Appeals~~ may be taken by any person aggrieved or by any officer, department, board or commission of the Village. The appeal shall be taken within such time as shall be prescribed by the Board by a general rule by filing with the officer from whom the appeal is taken and with the Board a notice of appeal, specifying the grounds thereof. The officer from whom the appeal is taken shall forthwith transmit to the Board all the papers constituting the record upon which the appeal action is taken.

2. An appeal stays all proceedings in furtherance of the action appealed from, unless the officer from whom the appeal is taken certifies to the Planning and Zoning Commission ~~Board of Appeals~~, after the notice of appeal has been filed with him, that by reason of facts stated in this certificate a stay would, in his opinion cause imminent peril to life or property. In this event the proceedings shall not be stayed other than by an order of the Board or a court of record on application of and on notice to the officer from whom the appeal is taken, and on due cause being shown.

C. Processing:

1. An appeal shall be filed with the Village Clerk. The Village Clerk shall forward the appeal to the Planning and Zoning Commission ~~Board of Appeals~~ for processing in accordance with the Illinois Compiled Statutes.

2. The Planning and Zoning Commission ~~Board of Appeals~~ shall fix a reasonable time for the hearing of the appeal and give due notice thereof to parties and shall decide the appeal within reasonable time. The Board may reverse or affirm, wholly or partly, or may modify the order, requirement or decision or determination as in its opinion ought to be made on the premises and to that end has all the powers of the official from whom the appeal is taken.

D. Decisions: All decisions, after hearing of the Planning and Zoning Commission ~~Board of Appeals~~ on appeals from an administrative order, requirement, decision or determination of the Director of ~~Community~~ Development Services or other authorized official of the Village, shall, in all instances, be final administrative determinations and shall be subject to judicial review only in accordance with applicable statutes of the State. (Ord. G-60, 3-22-1966)

Notes

1 2. See Title 2, Chapter 8 of this Code for the Zoning Board of Appeals.

13-14-6: VARIATIONS:

A. Authority: The Board of Trustees shall decide all applications for variations of the provisions of this Title after a public hearing held before the Planning and Zoning Commission ~~Board of Appeals~~ on such notice as shall be required by the Illinois Compiled Statutes. The Zoning Board of Appeals shall hold public hearings upon all applications for variations and shall report its recommendations to the Board of Trustees as to whether a requested variation would be in harmony with its general purpose and intent, and shall recommend a variation only where it shall have made findings of fact specifying the reason or reasons for recommending the variations. Such findings shall be based upon the standards prescribed in subsection D of this Section. No variation shall be granted by the Board of Trustees without such findings of fact. In the case of a variation where the Planning and Zoning Commission ~~Board of Appeals~~ fails to recommend the variation, it can only be adopted by ordinance with the favorable vote of two-thirds (2/3) of the Trustees.

B. Initiation: An application for a variation shall be in triplicate and may be made by any governmental office, department, board, bureau or commission, or by any person having a freehold interest, a possessory interest entitled to exclusive possession, a contractual interest which may become a freehold interest, or any exclusive possessory interest applicable to the land, or land and improvements described in the application for a variation.

C. Processing: An application for a variation shall be filed with the Village Clerk who shall forward one copy of such application to the Planning and Zoning Commission ~~Board of Appeals~~ for processing in accordance with applicable statutes of the State and one copy to the Board of Trustees.

D. Standards:

1. The Planning and Zoning Commission ~~Board of Appeals~~ shall not recommend a variation of the provisions of this Title as authorized in this Section unless it shall have made findings of fact based upon the evidence presented to it on the following specific issues that:

a. The property in question cannot yield a reasonable return if permitted to be used only under the conditions allowed by the regulations governing the district in which it is located.

b. The plight of the owner is due to unique circumstances.

c. The variation, if granted, will not alter the essential character of the locality.

2. For the purpose of supplementing the above standards, the Planning and Zoning Commission ~~Board of Appeals~~, in making the determination whether there are practical difficulties or particular hardships, shall also take into consideration the extent to which the following facts, favorable to the applicant, have been established by the evidence that:

a. The particular physical surroundings, shape, or topographical conditions of the specific property involved would bring a particular hardship upon the owner as distinguished from a mere inconvenience if the strict letter of the regulation were to be carried out.

b. The condition upon which the petition for variation is based would not be applicable generally to the other property within the same zoning classification.

c. The granting of the variation will not be detrimental to the public welfare or injurious to other property or improvements in the neighborhood in which the property is located.

d. The proposed variation will not impair an adequate supply of light and air to adjacent property, or substantially increase the danger of fire, or otherwise endanger the public safety or substantially diminish or impair property values within the neighborhood.

e. That the purpose of the variation is not based exclusively upon a desire to make more money out of the property.

f. That the alleged difficulty or hardship has not been created by any person presently having an interest in the property.

3. The Planning and Zoning Commission ~~Board of Appeals~~ may recommend and the Board of Trustees may require such conditions and restrictions upon the premises benefitted by a variation as may be necessary to comply with the standards set forth in this Section to reduce or minimize the injurious effect of such variation upon other property in the neighborhood, and to implement the general purpose and intent of this Title.

E. Unauthorized Variations: The variation procedure shall in no case be used to accomplish a result which could otherwise be achieved by a rezoning of the property involved, such as, but not limited to, establishment or expansion of a use not permitted in a residence district; authorizing the construction of residences in other than residence districts; nor authorizing other than single-family detached residences in the R1, R2, R3 and R4 Districts.

F. Reapplications: Any person having been denied a variation to the provisions of this Title respecting a specific parcel of property may not reapply for a like variation on said real property until the period of one year has elapsed since the denial of the application for variation by the Village President and Board of Trustees. (Ord. G-60, 3-22-1966; Ord. G-137, 9-14-1971)

13-14-7: ~~PLAN COMMISSION JURISDICTION 1 :~~

~~The Plan Commission of the Village, which has been duly established with functions as prescribed by the Illinois Compiled Statutes, shall have the following duties under this Title:~~

~~A. Receive from the Village Clerk copies of applications for proposed amendments and thereafter may submit its recommendations thereon to the Zoning Board of Appeals and Board of Trustees.~~

~~B. Receive from the Director of Community Development copies of applications for proposed special uses and thereafter submit its recommendations thereon to the Director and Board of Trustees.~~

~~C. Act on all other matters which are referred to it as required by the provisions of this Title.~~

~~D. Review, from time to time, the provisions of this Title and to make reports of its recommendations with respect to proposed amendments to the Board of Trustees. (Ord. G-60, 3-22-1966)~~

~~Notes~~

~~1 1. See Title 2, Chapter 1 of this Code for the Planning Commission.~~

13-14-~~8~~7: AMENDMENTS:

A. Authority: This Title may be amended from time to time by ordinance in accordance with applicable Illinois statutes. No vote shall be taken upon the adoption of a proposed amendment by the Village Board of Trustees until after a public hearing before the Planning and Zoning Commission ~~Board of Appeals~~ and a report of its findings and recommendations has been submitted to the Board of Trustees ~~along with the recommendation of the Plan Commission~~.

B. Initiation Of Amendment: Amendments may be proposed by the Village Board of Trustees, ~~Plan Commission or Zoning Board of Appeals~~ Planning and Zoning Commission, and by any person having a freehold interest, a possessory interest entitled to exclusive possession, a contractual interest which may become a freehold interest or any exclusive possessory interest which is specifically enforceable on the land which is described in the proposal for an amendment.

C. Processing:

1. A proposal for an amendment shall be filed with the Village Clerk and thereafter entered into the records of the first meeting thereafter of the Board of Trustees.

2. A copy of such proposal shall be forwarded by the Village Clerk to the ~~Zoning Board of Appeals~~ Planning and Zoning Commission with a request to hold a public hearing and submit to the Board of Trustees a report of its findings and recommendations. Such public hearing shall be held upon notice as required by Illinois Compiled Statutes.

~~3. The Village Clerk shall also transmit a copy of such proposal to the Plan Commission. The Plan Commission shall submit an opinion report relative to such proposed amendment to the Zoning Board of Appeals and Board of Trustees.~~

D. Decisions: The Board of Trustees, upon report of the ~~Plan Commission , if such report is made, and the report of the Zoning Board of Appeals~~ Planning and Zoning Commission, and without further public hearing, may vote upon the adoption of any proposed amendment in accordance with applicable Illinois Compiled Statutes, or may refer it back to the ~~Boards~~ Planning and Zoning Commission for further consideration.

The following criteria shall be taken in consideration of a request for a zoning amendment:

1. The character of the neighborhood;
2.The extent to which property values are diminished by the particular zoning restrictions;
3. The extent to which the removal of an existing limitation would depreciate the value of other property in the area;
4. The suitability of the property for the zoned purposes; 5. The existing uses and zoning of nearby property;
6. The length of time under the existing zoning that the property has remained unimproved, considered in the context of land development trends in the area;
7. The relative gain to the public as compared to the hardship imposed on the individual property owner;
8. The extent to which the ordinance promotes the health, safety, morals or general welfare of the public;
9. The relationship of the proposed use to the Comprehensive Plan of the Village; and
10. The community need for the use proposed by the property owner.

E. Reapplications: Any person having been denied an amendment to this Title respecting a specific parcel of property may not reapply for a like amendment on said real property until the period of one year has elapsed since the denial of the application for amendment by the President and Board of Trustees. (Ord. G-60, 3-22-1966; Ord. G-137, 9-14-1971)

13-14-~~9~~8: SPECIAL USES:

A. Purpose: The development and execution of this Title is based upon the division of the Village into districts, within any one of which the use of land and buildings and the bulk and location of buildings or structures, as related to the land, are essentially uniform. It is recognized, however, that there are special uses which, because of their unique character, cannot be properly permitted in particular districts without consideration, in each case, of the impact of those uses upon neighboring lands and upon public need for the particular use or the particular location. Such special uses fall into two (2) categories:

DRAFT

1. Uses operated by public agency or publicly-regulated utilities, or uses traditionally affected with a public interest.

2. Uses entirely private in character, but of such a nature that the operation may give rise to unique problems with respect to their impact upon neighboring property or public facilities such as, but not limited to, single-family attached and semi-detached dwellings, horizontal condominiums and other residential developments.

B. Authority: Special uses shall be authorized or denied by the village board in accordance with the statutes of the state applicable to amendments of this title, and the regulations and conditions set forth in this title for special uses.

No application for a special use shall be acted upon by the village board until after:

1. A written report is prepared and forwarded to the board of appeals and the village board by the plan commission in a manner prescribed herein for amendments to this title; and

2. A public hearing has been held by the ~~zoning board of appeals~~ Planning and Zoning Commission, after due notice by publication as provided by the applicable statutes of the state for amendments and upon a report of the plan commission to the board of trustees, if such a report is made.

C. Initiation: An application for a special use may be made by any person, firm or corporation or by any office, department, board, bureau or commission requesting or intending to request a zoning certificate.

D. Processing: An application for a special use, in such form and accompanied by such information as shall be established from time to time by the ~~plan commission~~ Planning and Zoning Commission, shall be filed with the village clerk and thereafter processed in the manner prescribed theretofore for applications and amendments. Special use applications may be processed simultaneously with requests for amendment of this title.

E. Decisions: The village board, upon report of the ~~zoning board of appeals~~ Planning and Zoning Commission and the plan commission, and without further hearing, may authorize or deny an application for a special use in accordance with ~~the~~ Illinois Compiled Statutes ~~statutes of the state applicable to amendments~~, or may refer it back to the ~~board of appeals and the plan commission~~ Planning and Zoning Commission for further consideration.

No special use shall be authorized by the village board unless ~~the special use~~:

1. ~~Is of the type described in subsection A1 of this section, is deemed necessary for the public convenience at that location~~ The proposed use is operated by a public agency, or for proposed uses traditionally affected with a public interest, and the proposed building or use is necessary or desirable to provide a service or a facility which is in the interest of the public convenience;

2. The proposed building or use will be ~~Is~~ so designed, located and proposed to be operated that the public health, safety and welfare will be protected; and

3. The proposed building or use will ~~Would~~ not cause substantial injury to the value of other property in the neighborhood in which it is located.

F. Conditions: The ~~plan commission and zoning board of appeals~~ Planning and Zoning Commission may recommend, and the village board may provide, such conditions and restrictions upon the construction, location and operation of a special use, including, but not limited to, provisions for off street parking and loading as may be deemed necessary to promote the general objectives of this title and to minimize the injury to the value of the property in the neighborhood. (Ord. G-60, 3-22-1966; Ord. G-66, 12-19-1966)

13-14-~~10~~9: FEES:

Fees for any relief under this title shall be as otherwise established by separate ordinance. (Ord. G-60, 3-22-1966; Ord. G-132, 5-25-1971; Ord. G-289, 3-24-1981)

13-14-1~~1~~0: VIOLATION, PENALTY AND ENFORCEMENT:

A. Any person who violates, disobeys, omits, neglects, refuses to comply with or who resists enforcement of any of the provisions of this title shall, upon conviction, be fined as provided in the general penalty in section 1-3-1 of this code for each offense. Each day that a violation is permitted to exist shall constitute a separate offense.

B. The ~~director of community development~~ Director of Development Services is hereby designated and authorized to enforce this title. However, it shall also be the duty of all officers, citizens and employees of the village, particularly of all members of the police and fire departments, to assist the ~~director of community development~~ Director of Development Services by reporting to him/her any new construction, reconstruction, improper land uses, or upon seeming violations of this title. (Ord. G-60, 3-22-1966; Ord. G-233, 5-31-1978; 2000 Code)

13-14-1~~2~~1: PUBLIC HEARING NOTIFICATION REQUIREMENTS:

All applicants filing an application with the village of Oak Brook for a map amendment, variation or special use as provided for in this title shall provide notice of all public hearings related to their application in the following manner:

A. All applicants shall provide notice of any public hearing related to their application to all record owners (as required by the Illinois municipal code) and to the general public in

the manner and in the time frame as provided in division 13 (zoning) of article 11 of the Illinois municipal code [1] .

B. In addition to the notice required by the Illinois municipal code, a sign shall be placed on the subject property informing the general public of an upcoming public hearing in accordance with the following requirements:

1. Such sign shall be posted on the subject property at a location oriented to and readable from the nearest adjacent street or roadway. However, where a parcel abuts two (2) or more streets or roadways, one such sign oriented to and readable from each abutting street or roadway is required.

2. If no public road abuts the property, the sign shall be placed on the property in question in such a position as may be most readily seen by the public.

3. Public notification signs shall be posted not less than fifteen (15) days prior to the public hearing and shall not be removed until after the public hearing has been completed unless otherwise directed to do so by the ~~community development director~~ Development Services department. The applicant shall remove all signs within forty eight (48) hours after the closing of the public hearing.

4. The public notification signs shall be weatherproof and measure no smaller than two feet by three feet (2' x 3') or be no larger than twelve (12) square feet and shall be mounted at least three feet (3') above the ground.

5. For consistency, said sign shall read as follows:

NOTICE
PUBLIC HEARING FOR THIS PARCEL
WILL BE HELD
For more information call:
Village of Oak Brook 630-368-5103

6. Any applicant requesting the subdivision of a parcel shall also provide notice by posting a sign on the subject property in a manner consistent with the requirements for posting public hearing signs. (Ord. G-764, 11-9-2004; per correspondence dated 2-20-2009)

Notes

1 1. 65 ILCS 5/11-13-1 et seq.

CHAPTER 15
PLANNED DEVELOPMENTS

SECTION:

13-15-1: Intent And Purpose

13-15-2: General Provisions

13-15-3: Planned Development Standards

13-15-4: Site Development Allowances

13-15-5: Procedures

13-15-6: Application Requirements

13-15-7: Effect Of Approval Or Denial

13-15-8: Amendments And Changes To Approved Planned Development Permits

13-15-1: INTENT AND PURPOSE:

The purpose of the regulations, standards, and criteria contained in this chapter is to provide an alternate zoning procedure under which land can be developed or redeveloped with innovation, imagination, and creative architectural design when sufficiently justified under the provisions of this chapter. The objective of the planned development is to encourage a higher level of design and amenity than is possible to achieve under standard zoning regulations. The end result is intended to be a product which fulfills the objectives of the village of Oak Brook commercial areas revitalization master plan and planning policies of the village while allowing flexibility from the standard application of the use and bulk regulations of the zoning regulations. The planned development is intended to permit and encourage flexibility and to accomplish the following specific purposes, among others:

A. To stimulate creative approaches to the commercial, nonsingle-family residential, and commercial/mixed use development of land.

B. To provide more efficient use of land.

C. To preserve natural features and provide open space areas and recreation areas in excess of those required under standard zoning regulations.

D. To develop and implement new approaches to the living environment through variety in type, design and layout of buildings, transportation systems, and public facilities.

E. To unify building and structures through design.

F. To promote long term planning pursuant to the village's commercial areas revitalization master plan, which will allow harmonious and compatible land uses or combination of uses with surrounding areas. (Ord. G-890, 7-14-2009)

13-15-2: GENERAL PROVISIONS:

A. Except as provided for in subsection 13-15-5E of this chapter, no new commercial, office, or mixed use development construction within the planned development overlay district shall be permitted except as approved as a planned development in accordance with this chapter; provided, however, that a stand alone project for construction of outdoor dining facilities or for drive-through facilities will not require a planned development under this chapter.

B. Each planned development shall be presented and reviewed on its own merits. It shall not be sufficient justification for approval of a planned development to rely on an already existing planned development, except to the extent that the existing planned development and the proposed planned development are part of an approved unified, phased, or master development plan.

C. The burden of providing evidence and persuasion that any planned development is necessary and desirable shall in every case rest with the applicant.

D. Buildings and uses or combinations of uses within a planned development shall be limited solely to those approved as part of the ordinance granting a planned development; provided, however, that any buildings and uses or combinations of uses in compliance with a unified, phased, or master development plan approved as part of the ordinance granting a planned development may be approved by the corporate authorities.

E. To the extent provided in the ordinance approving a proposed planned development, the proposed planned development need not comply with the density, dimension, area, bulk, use, and other zoning regulations that, but for the provisions of this chapter, would otherwise apply to the property on which the proposed planned development is intended. Modifications and departures from the standard zoning provisions may be provided in accordance with the provisions of this chapter and to the extent that they will not be detrimental to or endanger the public health, safety, morals, comfort, or general welfare. (Ord. G-890, 7-14-2009; Ord. G-904, 11-10-2009)

13-15-3: PLANNED DEVELOPMENT STANDARDS:

A. Planned Developments Are Not Permitted As Of Right: Planned developments shall be approved by the village only in direct response to the accrual of tangible public benefits from the planned development to the village and its residents, along with the neighborhood and area in which the planned development is proposed. These benefits shall include, without limitation, exceptional amenities, landscape features, architectural or site design,

or the conservation of special manmade or natural features of the site, all as more specifically set forth in the standards set forth in subsection B of this section.

B. General Design Standards: No application for a planned development shall be approved by the corporate authorities unless the proposed planned development satisfies the standards set forth in this subsection B and subsection C of this section. All of these standards shall not be regarded as inflexible, but shall be used as a framework by the village to test the quality of the amenities, benefits to the community, and design and desirability of the proposal.

1. Commercial Areas Revitalization Master Plan: The planned development shall not be inconsistent with the planning policies, goals, objectives, and provisions of the village's commercial areas revitalization master plan. A planned development must also not be inconsistent with the intent and spirit of the village of Oak Brook comprehensive plan.

2. Public Welfare: The planned development shall be designed, located, and proposed to be operated and maintained so that it will not impair an adequate supply of light and air to adjacent property and will not substantially increase the danger of fire or otherwise endanger the public health, safety and welfare.

3. Impact On Other Property: The planned development shall not be unnecessarily injurious to the use or enjoyment of other property in the neighborhood for the purposes permitted pursuant to the applicable zoning district, shall not prevent the normal and orderly development and improvement of surrounding properties for permitted uses, shall not be inconsistent with the community character of the neighborhood, shall not alter the essential character of the neighborhood, and shall not substantially diminish or impair property values within the neighborhood, or be incompatible with other property in the immediate vicinity. The uses permitted in a planned development must be of a type and so located so as to exercise no undue detrimental influence upon surrounding properties. The planned development must also address compliance with the village's noise, lighting, and other performance standards.

4. Impact On Public Facilities And Resources: The planned development shall be designed so that adequate utilities, road access, drainage, and other necessary facilities will be provided to serve the development. The planned development shall include such impact donations as may be reasonably determined by the corporate authorities. The required impact donations, including, without limitation, obligations under the village's subdivision regulations, shall be calculated in reasonable proportion to the impact of the planned development on public facilities and infrastructure to the extent permitted by law.

5. Archaeological, Historical Or Cultural Impact: The planned development shall not substantially and adversely affect a known archaeological, historical, or cultural resource located on or off of the parcel proposed for development.

6. Parking And Traffic: The planned development shall have or make adequate provision to provide ingress and egress to the proposed use in a manner that minimizes

traffic congestion in the public streets, provides appropriate cross access to adjacent properties and parking areas, and provides adequate access for emergency vehicles.

7. Adequate Buffering: The planned development shall have adequate landscaping, public open space, and other buffering features to protect uses within the development and surrounding properties.

8. Signage: Signage on the site of the planned development shall generally be in conformity with the village's sign regulations (chapter 11 of this title), except as may otherwise be specifically provided in the ordinance approving a planned development.

9. Ownership/Control Area: The site of the planned development must be under ownership and/or unified control of the applicant.

10. Need: A clear showing of need for the planned development must be made by means of an economic feasibility, land utilization and marketing study.

11. Compliance With Subdivision Regulations And Plat Act: All planned developments, whether or not they are by definition subject to the village's subdivision regulations or the Illinois plat act, shall comply with all standards, regulations and procedures of the village's subdivision regulations and the plat act except as is expressly provided otherwise in this chapter, or as otherwise provided by the corporate authorities pursuant to the ordinance approving the planned development, or the applicable sections of the village's subdivision regulations.

12. Covenants And Restrictions To Be Enforceable By Village: All covenants, deed restrictions, easements, and similar restrictions to be recorded in connection with the planned development shall provide that they may not be modified, removed, or released without the express consent of the corporate authorities and that they may be enforced by the village as well as by future landowners within the proposed development.

13. Security And Site Control: The planned development shall include the plans necessary to describe, establish, and maintain appropriate property and building security and site control measures for the planned development and the property on which the planned development is located. These plans shall also include measures to prevent adverse impacts on neighboring properties.

C. Additional Standards: In addition to the standards required in subsection B of this section, the following standards shall be considered in reviewing all proposed and amended planned developments, particularly with regard to elements of planned development proposals that do not satisfy the otherwise applicable provisions of the underlying zoning and subdivision regulations:

1. Integrated Design: A planned development shall be laid out and developed as a unit in accordance with an integrated overall design. This design shall provide for safe, efficient, convenient and harmonious grouping of structures, uses and facilities, and for

DRAFT

appropriate relation of space inside and outside buildings to intended uses and structural features.

2. Beneficial Common Open Space: Any common open space in the planned development shall be integrated into the overall design. These open spaces shall have a direct functional or visual relationship to the main building(s) and shall not be of isolated or leftover character. The following would not be considered usable common open space:

a. Areas reserved for the exclusive use or benefit of an individual tenant or owner.

b. Dedicated streets, alleys and other public rights of way.

c. Vehicular drives, parking, loading and storage areas.

d. Irregular or unusable narrow strips of land.

3. Functional And Mechanical Features: Exposed storage areas, trash and garbage retainers, exposed machinery installations, service areas, truck loading areas, utility buildings and structures, and similar accessory areas and structures shall be accounted for in the design of the planned development and made as unobtrusive as possible. These features shall be subject to such setbacks, special planting or other screening methods as shall reasonably be required to prevent their being incongruous with the existing or contemplated environment and the surrounding properties.

4. Visual And Acoustical Privacy: The planned development shall provide reasonable visual, and acoustical privacy. Fences, insulations, walks, barriers and landscaping shall be used as appropriate for the protection and aesthetic enhancement of property and the privacy of its occupants, screening of objectionable view or uses, and reduction of noises.

5. Energy Efficient Design: A planned development shall be designed with consideration given to various methods of site design and building location, architectural design of individual structures, and landscaping design capable of reducing energy consumption within the planned development. The applicant will be encouraged, to the extent feasible, to obtain leadership in energy and environmental design ("LEED") certification for the project. A planned development applicant may also undertake the following:

a. Having at least one member of the applicant's project team be a "LEED accredited professional" - a person who has received the LEED accredited professional designation from the United States green building council ("USGBC"), the Green Building Certification Institute, or another entity authorized by the USGBC to grant that designation.

b. Having its application materials include a "LEED checklist" developed by the U.S. green building council indicating the credits pursued and total points anticipated for a project under the most appropriate LEED rating system, in consultation with the ~~d~~Director of ~~community d~~Development Services.

6. Drives, Parking And Circulation: Principal vehicular access shall be from dedicated public streets, and access points shall be designed to encourage smooth traffic flow with controlled turning movements and minimum hazards to vehicular or pedestrian traffic. With respect to vehicular and pedestrian circulation, including walkways, interior drives and parking, special attention shall be given to location and number of access points to the public streets, width of interior drives and access points, general interior circulation, separation of pedestrian and vehicular traffic, adequate provision for service by emergency vehicles, and arrangement of parking areas that are safe and convenient, and insofar as feasible, do not detract from the design of proposed buildings and structures and the neighboring properties. To the extent practical, planned developments shall provide connections to and from existing bike and walking paths so as to ensure a continuous route without gaps or disconnections.

7. Surface Water Drainage: Special attention shall be given to proper site surface drainage so that removal of surface waters will not adversely affect neighboring properties or the public storm drainage system. Surface water in all paved areas shall be collected at intervals so that it will not obstruct the flow of vehicular or pedestrian traffic. (Ord. G-890, 7-14-2009)

13-15-4: SITE DEVELOPMENT ALLOWANCES:

Proposed site development characteristics that are not consistent with the zoning regulations otherwise applicable to the property on which a planned development or planned development amendment is proposed, may be approved in accordance with this chapter as part of the ordinance approving the planned development or planned development amendment. The applicant shall specifically identify each site development departure and demonstrate how each departure will be compatible with surrounding development and is not inconsistent with the planned development standards set forth in section 13-15-3 of this chapter. Each departure shall be specifically stated and approved in the ordinance approving the planned development or planned development amendment. Any approved departures from the otherwise applicable zoning regulations shall not be deemed a nonconformity and shall not require a variation. (Ord. G-890, 7-14-2009)

13-15-5: PROCEDURES:

The following procedures are required to assure the orderly review of every planned development application in a timely and equitable manner:

A. Preliminary Board Review:

1. A prospective applicant, prior to meeting with village staff for a formal prefiling review, shall appear before the corporate authorities for a preliminary board review. At a

minimum, the applicant shall provide the following materials to the corporate authorities for its preliminary review: a) a preliminary concept plan of the development, and b) a brief narrative describing the overall character, intensity, uses, and nature of the proposed planned development. Prior to submission to the corporate authorities, the ~~community development director~~ Director of Development Services will review the materials to confirm that the materials provide sufficient information to adequately inform the corporate authorities of the nature and scope of the proposed planned development. If sufficient information is provided, the applicant shall coordinate with the village manager to be placed on a corporate authorities agenda and scheduled for the earliest appropriate corporate authorities meeting.

2. The purpose of the preliminary board review shall be to broadly acquaint the corporate authorities with the applicant's proposal and to provide the applicant with any preliminary views or concerns that members of the corporate authorities may have at a time in the process when positions are still flexible and adjustment is still possible and prior to the time when the applicant is required to expend the funds necessary to prepare the complete documentation required for a formal application.

3. At the meeting at which the preliminary board review is conducted, any member of the corporate authorities may make any comments, suggestions or recommendations regarding the preliminary development concept plan deemed necessary or appropriate by that member; provided, however, that no final or binding action shall be taken with respect to any preliminary application. Any views expressed in the course of the corporate authorities' review of any preliminary development concept plan shall be deemed to be only preliminary and advisory and only the individual views of the member expressing them. Nothing said or done in the course of such review shall be deemed to create, or to prejudice, any rights of the applicant or to obligate the corporate authorities, or any member of it, to approve or deny any formal application following full consideration as required by this chapter.

B. Prefiling Review And Transmittal Of Application:

1. Conference:

a. Following the preliminary board review, a prospective applicant, prior to submitting a formal application for a planned development, shall meet for a prefiling review conference with the village manager, the ~~community development director~~ Director of Development Services, and any other village official or employee designated by the village manager. The purpose of the conference is to assist the applicant in understanding the commercial areas revitalization master plan, the requirements of this chapter, the zoning regulations, the site development allowances, the standards by which the application will be evaluated, and the application requirements.

b. After reviewing the planned development process, the applicant may request a waiver of any application requirement which in the applicant's judgment should not apply to the proposed planned development. The justification for a waiver must be that the

application requirement should not apply because it does not relate and is not necessary given the nature and scope of the proposed planned development. All requests for application waivers shall be made in writing to the ~~community development director~~ Director of Development Services prior to the submission of the formal application documents.

c. All requests for waiver shall be reviewed by the ~~community development director~~ Director of Development Services, who will make a final determination regarding the waiver within fifteen (15) working days of receipt of the request.

d. If deemed appropriate by the ~~community development director~~ Director of Development Services, the applicant, prior to submitting a formal application for a planned development, will schedule a public meeting to discuss the proposed planned development and the nature and extent of impact, if any, on area residents. If a meeting is required, the applicant shall send a written notice of the meeting via certified mail to all taxpayers of record and residents for all property within five hundred feet (500') of the proposed planned development. The notice shall be mailed not more than thirty (30) nor less than fifteen (15) days prior to the date of the meeting. A copy of the notice and mailing list shall be provided to the ~~community development director~~ Director of Development Services. A written summary of comments made at the meeting shall be maintained and submitted by the applicant with the application.

2. Filing Of Application: Following the completion of the prefiling review conference, the applicant shall file an application for a planned development in accordance with this chapter. The ~~community development director~~ Director of Development Services shall deliver copies of the application to other appropriate village departments for review and comment.

3. Deficiencies: The ~~community development director~~ Director of Development Services shall determine whether the application is complete. If the ~~community development director~~ Director of Development Services determines that the application is not complete, then the ~~community development director~~ Director of Development Services shall notify the applicant in writing of the deficiencies and shall take no further steps to process the application until the deficiencies are remedied.

4. Report On Compliance: A copy of the complete application and a written report incorporating the comments of village staff and other agencies regarding the compliance of the proposed planned development with the requirements and standards of this chapter shall be delivered to the planned development commission prior to the public hearing required by subsection C of this section.

5. Determination Not Binding: Neither the ~~community development director's~~ Director of Development Services determination that an application is complete nor any comment made by the ~~community development director~~ Director of Development Services or village staff at a prefiling review conference or as part of the review process shall be intended or construed as a formal or informal recommendation for or against the approval of a

proposed planned development, or any component part thereof, nor shall they be intended or construed as a binding decision of the village, the ~~planned development commission~~ Planning and Zoning Commission, or village staff.

C. Review And Action By The ~~Planned Development Commission~~ Planning and Zoning Commission:

1. Upon receiving the report from the ~~community development director~~ Director of Development services, the ~~planned development commission~~ Planning and Zoning Commission shall hold a public hearing on the proposed planned development.

2. Notice of the required public hearing shall be published by the village, at the applicant's expense, not more than thirty (30) nor less than fifteen (15) days before the scheduled hearing in a newspaper of general circulation in the village and shall contain the following information:

a. The identification number designation of the application;

b. The date and time of the public hearing;

c. The location of the public hearing; and

d. The general location of the property, the legal description of the property and its street address, if applicable, and a short description of the proposed planned development and purpose of the public hearing.

3. Notice of the required public hearing shall also be provided by the village, at the applicant's expense, by posting a sign or signs on the property not more than thirty (30) days nor less than fifteen (15) days prior to the public hearing. The sign shall be weatherproof and contain the information as is required in subsection C2 of this section. Failure to post the sign(s) and/or the inadvertent removal or knocking down (by the village or others) of the sign after posting but before the public hearing shall not invalidate, impair, or otherwise affect any planned development subsequently granted following the public hearing, nor shall it require a postponement of the public hearing.

4. Notice of the required public hearing shall also be provided by the applicant by certified U.S. mail, return receipt requested, to the taxpayers of record and owners of record of the property which is the subject of the application (if different than the applicant), and the taxpayers of record and residents of all property within five hundred feet (500') of the subject property. The notice shall contain the information as is required in subsection C2 of this section and shall be mailed not more than thirty (30) nor less than fifteen (15) days prior to the date of the public hearing. The notice shall also include the name and address and phone number of the applicant for the planned development.

5. The transcript of testimony, if any, the commission's minutes, all applications, requests, exhibits, and papers filed in the proceeding before the commission, and the

decision and report, or reports, of the commission shall constitute the record for that particular application.

6. The ~~planned development commission~~ Planning and Zoning Commission shall review the application, the standards and requirements established by this chapter, the report of the ~~community development director~~ Director of Development Services, and any oral and written comments and testimony received by the planned development commission before and at the public hearing. The ~~planned development commission~~ Planning and Zoning Commission shall recommend approval, approval with conditions, or disapproval of the proposed planned development.

7. Every recommendation of the commission upon any application filed pursuant to this chapter shall be by a written resolution and shall include such findings of fact and conclusions as the commission shall deem necessary. The resolutions shall generally refer to the evidence in the record and to the exhibits, plans, or specifications upon which the recommendation is based. The resolution shall generally specify the reason or reasons for the recommendation and shall contain a conclusion or statement separate from the findings setting forth the recommendation of the commission. Every resolution shall expressly set forth any limitations or conditions recommended by the commission. In order to make a recommendation to approve (with or without conditions) or a recommendation to deny a proposed planned development or an amendment to an existing planned development, the affirmative vote of a majority of all members of the commission then holding office shall be required.

D. Review And Action By The Corporate Authorities:

1. Within sixty (60) days of receipt of the report and recommendation of the ~~planned development commission~~ Planning and Zoning Commission, and without further public hearing, the corporate authorities shall, at a minimum, commence consideration of the proposed planned development. The corporate authorities will attempt to conclude its consideration and render a final decision as soon as possible within that sixty (60) day time period, but may extend its consideration as necessary to allow a full and complete review and consideration of the proposed planned development. Following its consideration, the corporate authorities shall: a) deny the application; b) refer the application back to the ~~planned development commission~~ Planning and Zoning Commission for further review and, if necessary, additional public hearings; c) postpone further consideration pending the submittal of additional information, including any application requirement previously waived but deemed necessary by the village for its consideration; or d) adopt an ordinance approving the planned development.

2. Any action taken by the corporate authorities pursuant to subsection D1 of this section shall require the concurrence of a majority of the corporate authorities; provided, however, that any proposed planned development that does not receive a recommendation of approval (with or without conditions) from the ~~planned development commission~~ Planning and Zoning Commission shall not be approved by the corporate authorities except by the affirmative vote of two- thirds (2/3) of the corporate authorities.

DRAFT

3. In approving a planned development, the corporate authorities may attach such conditions to the approval as it deems necessary to have the proposed use or combination of uses meet the standards set forth in this chapter and to prevent or minimize adverse effects on other property in the immediate vicinity. The conditions may include, but are not limited to: impact donations and other related fees or property or monetary contributions; limitations on size, bulk, location, and setbacks; requirements for landscaping, signage, and outdoor lighting; provisions for adequate ingress and egress; hours of operation; and such other conditions as the corporate authorities may deem necessary in furtherance of the objectives of this chapter.

E. Exemptions: At the election of the applicant, the planned development provisions of this chapter shall not apply to an existing development or a proposed development project that satisfies all of the underlying zoning regulations applicable to the property. In such case, the proposed development will be subject to the processes of the village that are applicable to any new construction project. (Ord. G-890, 7-14-2009; Ord. G-904, 11-10-2009)

13-15-6: APPLICATION REQUIREMENTS:

A. Owner To File Application: The application for a planned development must be filed by the owner of the property on which the planned development is proposed to be located or any person or entity having a contractual interest in the property. If the application is not filed by the owner, the owner must, at a minimum, confirm to the village in writing that the owner has authorized the applicant to apply for the proposed planned development.

B. Information Required: Applications for a planned development shall be filed with the ~~community development director~~ Director of Development Services in such form and accompanied by such information, with sufficient copies, as shall be established from time to time by the village. Every application shall contain, at a minimum, the following information and related data:

1. The names and addresses of the owner(s) of the subject property and the applicant(s).

2. A statement from the owner of the subject property, if not the applicant, approving of the filing of the application by the applicant.

3. A survey of, and legal description and street address for, the subject property.

4. A statement demonstrating compliance of the proposed planned development with the commercial areas revitalization master plan, and evidence of the proposed project's compliance in specific detail with each of the standards for planned developments provided in this chapter.

5. A scaled site plan showing the existing contiguous land uses, natural topographic features, zoning districts, public thoroughfares, and transportation and utilities.

6. A scaled site plan of the proposed planned development showing lot area, the required yards and setbacks, contour lines, common space, and the location, floor area ratio, lot area coverage and heights of buildings and structures, number of parking spaces and loading areas.

7. Schematic drawings illustrating the design and character of the building elevations, types of construction, and floor plans for all proposed buildings and structures. The drawings shall also include a schedule showing the number, type, and floor area for all uses or combinations of uses, and the floor area for the entire proposed planned development.

8. A landscaping plan showing the location, size, character, and composition of vegetation and other material.

9. The substance of existing covenants, easements, and other restrictions, and any to be imposed, on the use of land, including common open space, and buildings or structures.

10. A schedule showing the approximate date for beginning and completion of each stage of construction of the planned development.

11. A professional traffic study acceptable to the village showing the proposed traffic circulation pattern within and in the vicinity of the area of the planned development, including the location and description of public improvements to be installed, and any streets and access easements.

12. A professional environmental impact study identifying and describing the nature and extent of noise, light, and other potential environmental impacts associated with the planned development and the property on which the planned development is located, and the plans necessary to address those impacts.

13. A professional economic analysis acceptable to the village, including the following:

a. The financial capability of the applicant to complete the proposed planned development;

b. Evidence of the project's economic viability; and

c. A comprehensive analysis summarizing the economic impact the proposed planned development will have upon the village.

14. Copies of all environmental impact studies as required by law.

15. An analysis setting forth the anticipated demand on all village services resulting from the proposed planned development.

16. A plan showing off site utility improvements required to serve the planned development, and a report showing the cost allocations and funding sources for those improvements.

DRAFT

17. A site drainage and stormwater detention and maintenance plan for the proposed planned development.

18. A photometric/lighting plan for the proposed planned development.

19. A written summary of residents' comments pertaining to the proposed application from any public meeting or hearing held pursuant to subsection 13-15-5B or C of this chapter.

20. Plans necessary to describe, establish, and maintain appropriate property and building security and site control measures for the planned development and the property on which the planned development is located. These plans shall also include measures to prevent adverse impacts on neighboring properties.

C. Fees:

1. General Fees: Each application for a planned development shall be accompanied by a fee in the amount established by the corporate authorities from time to time payable to the order of the village to defray the costs and expenses of the planned development procedures, and any other filing or other charges established pursuant to this subsection.

2. Additional Cost Recovery: Every application filed for a planned development pursuant to this chapter that requires the village to incur third party costs or expenses, including, without limitation, legal fees incurred by the office of the village attorney or any attorney or firm retained by the village, shall be subject to the cost recovery fee and lien provisions set forth in this subsection. The cost recovery fee shall be in addition to the general fees.

3. Responsibility For Payment: The owner of the property that is the subject of the application and, if different, the applicant, shall be jointly and severally liable for the payment of the general fees, the cost recovery fee, and for the cost recovery lien. By signing and authorizing the application, the owner or applicant shall be deemed to have agreed to pay, and to have consented to, the general fees and cost recovery fee, plus any costs of collection, that have not been paid within thirty (30) days following the mailing of a written demand for payment to the owner or applicant at the address set forth on the application, including any additional cost recovery fees assessed herein. Any lien filed pursuant to this subsection may be foreclosed in the manner provided for mortgages or mechanics' liens under Illinois law.

4. Recoverable Costs: For purposes of calculating the cost recovery fee and general fees, the costs incurred by the village with respect to the following items shall be deemed to be the "actual costs" incurred by the village in processing an application for a planned development:

a. Publication and mailing of notices;

b. Court reporter and recording secretarial services;

DRAFT

c. Professional and technical consultant services;

d. Village attorney, or other village related attorney or law firm, consultation, meeting attendance, document preparation, and review;

e. Copy reproduction;

f. Document recordation; and

g. Inspection fees.

5. Escrow: For each application filed and processed pursuant to this chapter that requires the village to incur third party costs or expenses, an application fee escrow account shall be established as provided below:

a. Initial Deposit: Every petition filed that requires the village to incur third party costs or expenses shall be accompanied by an initial deposit for purposes of paying additional application fees. The amount of the initial deposit shall be determined by the village manager, and the initial deposit and any subsequent deposit shall be placed in an application fee escrow account. No interest shall be payable on any such escrow account.

b. Draws From Escrow: From the date of filing of any application, the village shall maintain an accurate record of the actual costs of processing and reviewing the application. The village shall, from time to time, draw funds from the escrow account established to pay costs identified in subsection C4 of this section and shall transfer funds to the appropriate village accounts. The village shall maintain an accurate record of all draws.

c. Additional Deposits: Should the village at any time determine that the escrow account established in connection with any application is, or is likely to become, insufficient to pay the actual costs of processing an application, the village shall inform the applicant of that fact in writing and demand an additional deposit in an amount deemed to be sufficient to cover foreseeable additional costs. Unless and until such additional amount is deposited by the applicant, the village may direct that processing of the application be suspended or terminated. Any termination shall be deemed a withdrawal of the application by the applicant.

d. Final Settlement: As soon as reasonably feasible following final action on an application, the village shall cause a final accounting to be made of the escrow deposits made in connection with the application and the actual costs of processing the application and shall make a final charge of costs against the escrow deposit. A copy of the accounting shall be provided to the applicant. If the amount in the escrow is insufficient to pay the total actual costs, a written demand for payment of the balance due shall be mailed to the applicant. If any unused balance remains in the escrow account after paying the total actual costs, that amount shall be returned to the applicant.

6. Waiver For Specified Public And Charitable Bodies: The provisions of this subsection may be waived by the corporate authorities for fees applicable to any application filed by

any public body, or any agency deriving the majority of its revenues from taxes levied within the village, or any charitable or eleemosynary organization.

7. Condition Of All Planned Development Applications And Approvals: No application filed pursuant to this chapter shall be considered complete unless and until all fees due pursuant to this subsection C have been paid. Every approval granted and every permit issued pursuant to this chapter shall, whether or not expressly so conditioned, be deemed to be conditioned upon payment of cost recovery fees as required by this subsection C.

8. Time Periods: Where this chapter provides that the passage of time without decision or action shall be deemed an approval or recommendation for approval, all time periods shall be tolled during any period of nonpayment, but shall otherwise continue to run.

9. Failure To Pay: The failure to fully pay cost recovery fees when due shall be grounds for refusing to process an application and for denying or revoking any planned development approval sought or issued with respect to the land or development to which the unpaid fee relates. (Ord. G-890, 7-14-2009)

13-15-7: EFFECT OF APPROVAL OR DENIAL:

A. Approval of the planned development by the corporate authorities authorizes the applicant to proceed with any necessary applications for building permits, certificates of occupancy, and other permits which the village may require for the proposed planned development. The village's ~~community development director~~ Director of Development Services shall review applications for these permits for compliance with the terms of the planned development granted by the corporate authorities and other applicable requirements. No permit shall be issued for development which does not comply with the applicable requirements of law, including, without limitation, the terms and conditions of the planned development ordinance approved by the corporate authorities.

B. The village shall administratively revise the official zoning map to properly note the existence and boundaries of each approved planned development; provided, however, that any such notation of a planned development shall not constitute a map amendment to the official zoning map.

C. Subject to subsection G of this section, the corporate authorities may declare the approval of a planned development null and void if the recipient does not file a complete application for a building permit relative to the proposed planned development within nine (9) months after the date of adoption of the ordinance approving the planned development.

D. Subject to subsection G of this section, the corporate authorities may declare the approval of a planned development null and void if construction has not commenced within twenty four (24) months, and is not completed within thirty six (36) months, after the date of adoption of the ordinance approving the planned development, except as may otherwise be provided in the ordinance approving the planned development.

E. Subject to subsection G of this section, the corporate authorities may declare the approval of a planned development with a phasing plan null and void if construction has not commenced and is not completed in accordance with the terms of the phasing plan.

F. Subject to subsection G of this section, the corporate authorities may declare the approval of a planned development with a master development plan null and void if construction has not commenced and is not completed in accordance with the terms and conditions contained in the master development plan.

G. An extension of the time requirements provided pursuant to subsections C, D, E, and F of this section may be granted by the corporate authorities for good cause shown by the applicant, provided a written request is filed with the village at least four (4) weeks prior to the respective deadline.

H. The corporate authorities may declare the approval of a planned development null and void if the use or combination of uses for which the approval was granted ceases for a consecutive period of one year.

I. No application for a planned development which was previously denied by the corporate authorities shall be considered by the planned development commission or the corporate authorities if it is resubmitted in substantially the same form and content within one year of the date of such prior denial.

1. The ~~community development director~~ Director of Development Services shall review the application for a planned development and determine if the application is or is not substantially the same as a previously denied application. An applicant has the right to request a meeting before the corporate authorities to appeal the determination of the ~~community development director~~ Director of Development Services that the application is substantially the same, provided a petition for appeal is filed in writing with the village manager within ten (10) days after the ~~community development director's~~ Director of Development Services determination.

2. The corporate authorities shall affirm or reverse the determination of the ~~community development director~~ Director of Development Services, regarding whether the new application is substantially the same as a previous application, within forty five (45) days after receipt of the appeal.

3. If it is determined that the new application is not substantially the same, then the applicant shall be entitled to continue with the application process and have the application reviewed in accordance with the provisions of this chapter. (Ord. G-890, 7-14-2009)

13-15-8: AMENDMENTS AND CHANGES TO APPROVED PLANNED DEVELOPMENT PERMITS:

A. Major Change. Except for those specific alterations that meet the standards to qualify as a "minor change~~s~~" as provided in subsection B, or an administrative change as provided in subsection C ~~of this section~~, any amendments or modifications to an approved planned development or any addition to or expansion of an existing planned development shall require separate review and approval under the provisions applicable to the initial approval of a planned development.

B. A "minor change" is any change in the site plan or design details of an approved planned development which is consistent with the standards and conditions applicable to the planned development and which does not alter the concept or intent of the planned development, but does not meet the standards of an "Administrative Change" in subsection C. ~~A minor change shall not increase the planned development's density, add new uses, increase any applicable bulk regulation, reduce open space, modify the proportion of housing types, change or add new parking areas, alter alignment of roads, utilities or drainage, amend final development agreements, provisions or covenants, or provide any other change inconsistent with any standard or condition imposed by the corporate authorities in approving the planned development.~~ A developer's request for M~~m~~inor C~~c~~hange ~~may be approved by the village manager, following receipt of a recommendation~~ must be accompanied by an accurate schematic and descriptive narrative of the proposed changes (the " Minor Change Request"). ~~of~~ T~~t~~he ~~community development director~~ Director of Development Services shall make a written recommendation (the "Written Recommendation") to the Village Manager who shall then submit the Minor Change Request and Written Recommendation to the Village President and Board of Trustees (collectively the "Corporate Authorities") for review, such review period not to exceed seven (7) calendar days (the "Notice Period"). At the conclusion of the Notice Period:~~, without obtaining separate approval by the corporate authorities.~~

1. If less than two members of the Corporate Authorities provide a written objection to the Village Manager, the Written Recommendation shall be deemed acceptable and the Minor Change Request shall be approved by the Village Manager;
2. If two or more members of the Corporate Authorities provide a written objection to the Village Manager, the Written Recommendation and Minor Change Request shall be referred to the Corporate Authorities at next available Village Board of Trustees meeting for discussion and/or referral to the Planning and Zoning Commission. At the meeting:
    a. If the Corporate Authorities, by majority vote present at such meeting, vote in favor to refer to the Minor Change Request to the Planning and Zoning Commission, then such request shall be deemed a Major Change, requiring separate review and approval under the provisions applicable to the initial approval of a planned development.
    b. Any failed vote, by majority present at such meeting, to vote in favor to refer the Minor Change Request to the Planning and Zoning Commission shall be deemed acceptance of the Written Recommendation and the Minor Change Request shall be approved by the Village Manager.

C. Administrative Change. An "Administrative Change" is a nominal change in the site plan or design details of an approved planned development which is consistent with the standards and conditions applicable to the planned development and which does not materially alter the concept or intent of the planned development. Nominal changes shall be defined as minor shifting of elements within the plan which are other unrecognizable to the general public. Such nominal changes may include shifting of landscape elements, without reduction in number, substantially similar material substitutions, minor architectural modifications such as shifting or rearrangement of features without reduction in the quality of materials or design, or shifting of underground utilities. An Administrative Change may be approved by the Village Manager following receipt of a written recommendation (the "Written Recommendation") of the Director of Development Services.

D. The standard to apply to changes outlined in subsections B and C of this section shall include any material change, which shall be defined as any change where there is a substantial likelihood that such change, when viewed by a reasonable person, would result in an outcome that: (i) is inconsistent with the standards and conditions applicable to the planned development; or (ii) alters the concept or intent of the planned development. The following changes shall be deemed to be material for purposes of this section and specifically excluded from the scope of an Administrative Change or a Minor Change:

- Any increase the planned development's density(including but not limited to FAR or Lot Coverage);
- Any addition of any new uses not otherwise permitted by the underlying Zoning District;
- Any increase in any applicable bulk regulation;
- Any reduction in open space;
- Any modification of the proportion of units and/or bedroom counts
- Any change to, addition or removal of any new parking areas
- Any alteration of the alignment of roads or above-ground utilities;
- Any amendment of final development agreements, provisions or covenants
- Any sign not permitted by the Sign Code
- Any electrical box, gas line, meter, emergency exit door, or other such feature facing an entrance or public street which is not fully screened in a year-round manner;
- Any other change inconsistent with any standard or condition imposed by the corporate authorities in approving the planned development.

~~C~~ E. The provisions and limitations of subsections A through ~~and B~~D of this section are subject to such additional conditions and provisions as the corporate authorities may include in the ordinance approving a planned development.

Under Title 13, Chapter 18 (New Chapter)

LANDSCAPE STANDARDS

13-18-1: PURPOSE

13-18-2: LANDSCAPING REQUIREMENTS

13-18-3: ENERGY CONSERVATION AND GREEN BUILDING

13-18-1: PURPOSE:

The regulations of this Chapter 18 are intended to establish a comprehensive set of procedures, standards and guidelines for the appearance, design, landscaping, and environmental quality of properties within the Village, and to further:

Promote the public health, safety, and general welfare of the citizens of the Village;

Promote orderly community development, as well as encourage both high quality and innovative designs;

Protect and enhance property values;

Protect and enhance the social, cultural, economic, environmental and aesthetic development of the community; and

Ensure that the Village remains a safe and attractive community in which to reside and operate a business.

13-18-3: LANDSCAPING REQUIREMENTS:

A. Chapter 4 of Title 8, Trees and Shrubs, should be referenced for general requirements for landscaping in the public right-of-way, obstructions of public areas from landscaping on private property, and treatment of diseased trees.

B. Landscape Plan Requirements. All landscape plans so submitted shall be at an appropriate scale, not smaller than 1 inch = 20 feet. Completed landscape plans shall contain information including but not limited to: detailed landscape site plan

DRAFT

information; detailed schedule of landscape materials; and irrigation plans, as outlined below:

1. Title Block.

2. Name and Address of the property owner/petitioner.

3. Name of Registered Landscape Architect /Contractor.

4. Landscape Architect's /Contractor's firm name and address.

5. Scale data, north arrow and date and date of any revisions.

6. All site plan information as required in Chapter 18, Section 2; Location of Existing Conditions and Proposed Landscape Improvements, including:

   a. Identification of all proposed plant materials with planting bed, planters, and planter box locations and dimensions.

   b. Treatment of all ground surfaces (ground covers, sod, seed, seasonal beds, paving, impervious and pervious materials).

   c. Walls and fences (indicating height and material).

   d. Parking spaces and driveway aisles.

   e. Spot elevations and/or contours, existing and proposed.

   f. Berms, with one (1) foot interval contours indicated.

   g. Sidewalks and pedestrian paths.

   h. Existing tree survey (six (6) inch caliper and above, with drip line), noting trees proposed for removal and planned for preservation.

   i. Monument sign locations.

   j. Refuse/Recycling disposal areas.

DRAFT

k. Public rights of way/easements, including street widths/drives/approaches.
l. Other exterior landscape amenities including exterior tables and benches.

7. Schedule of proposed and existing landscape material, including:

   a. List of all proposed plantings, indicating common and botanical names, caliper, height or size and quantity.

   b. List of all existing trees proposed for removal, six (6) inch caliper or greater, indicating caliper, common and botanical names.

   c. List of all existing trees, six (6) inch caliper or greater, planned for preservation, indicating caliper size, common and botanical names.

8. Irrigation Plan, including system details and sprinkler head locations, providing for underground irrigation of planting beds or a water supply outlet no greater than one hundred fifty (150) feet from planting beds, if required.

9. Construction erosion control plan.

10. Where applicable, the Development Services department may require less information, or any other additional information to appropriately evaluate compliance of the proposed development or improvement.

C. Planting Design and Preservation Criteria

1. New planting materials used in conformance with the provisions of this Chapter, shall be:

   a. Plants approved by the Village of Oak Brook, in accordance with the list of approved trees contained in the public works construction standards, the Ornamental Growers Association of Northern Illinois, or the Illinois Chapter of Landscape Contractors listings.

   b. High quality nursery-grown stock. Substandard "B-grade" or "Park Grade" plants are not acceptable.

   c. Plants listed as "Do not plant" by the Morton Arboretum are not acceptable.

   d. Grown in a climate zone similar to Oak Brook. (i.e., United States Department of Agriculture Zone 5b).

   e. Capable of withstanding the extremes of individual site microclimates.

DRAFT

f. Selected for interest in its structure, texture, color and for its ultimate growth.

g. In conformance with the American Standards for Nursery Stock, ANSI Z60.1-Latest Edition.

h. For each plant group (canopy tree, evergreen tree, etc.) there shall be no more than twenty-five percent (25%) of one genus.

i. Existing trees with an eight inch (8") caliper or greater shall be preserved on the property to the extent possible, as determined by the Development Services department.

j. Evergreens shall be incorporated into the landscape plan and treatment of a site, particularly in required buffers for property zoned residential, the screening of refuse holding areas, and critical points of required parking lot screening.

k. To ensure that landscape materials do not constitute a driving hazard, clear Intersection Sight Distance shall be established at all street intersections and at the intersection of site driveways and streets as required by Bureau of Local Roads and Streets Manual, Chapter 28.

l. Plant materials shall be placed against long expanses of building walls, fences and other barriers to soften their effect. Grouping of plants shall be encouraged.

m. Where site characteristics or property dimensions limit the use or survivability of live landscaping as an effective screen, masonry walls shall be used for required screening subject to the regulations set forth in Chapter 13-3-17 (Fences Regulations).

1) All masonry walls or decorative fencing shall be constructed and installed in a durable fashion, and shall have the finished side facing the street or property line.

D. Installation of Plant Materials:

1. Plant materials of all types and species shall be installed in accordance with the minimum technical specifications of the "Illinois Chapter of Landscape Contractors," including the guarantee and replacements sections.

2. Minimum plant sizes at time of installation shall be:

a. Shade Trees: two and one-half (2 1/2) inch caliper.

b. Ornamental Trees: two (2) inch caliper or if in clump form, six (6) feet in height.

c. Evergreen Trees: five (5) feet in height.

d. Shrubs required for screening: three (3) feet in height; shrubs used for other purposes: eighteen (18) inches in height.

e. Ground Cover: spaced no less than twelve (12) inches on center.

f. Perennials: spaced no less than is recommended for the particular species.

3. Plantings on any portion of the public right-of-way provided by an adjacent property owner, association, or individual, that are removed as a result of Village utility construction or maintenance, or other Village activities, may be replaced at the sole responsibility of the property owner, association or individual. The Village shall not be required to replace any plant material in the public right-of-way.

E. Minimum Setbacks and Landscape Requirements for Off-Street Parking Lots:

1. Every off-street parking lot or parking area containing five (5) or more parking spaces shall be buffered and screened from public view and adjacent property by a berm and perimeter landscaped area in accordance with the yard setback requirements of Chapter 12, 13-12-3 H. (Off Street Parking Regulations). The minimum parking lot setbacks shall be maintained in accordance with the following schedule:

2. The minimum width for the perimeter screening area shall be measured from the property line and shall not include any parking overhang.

3. No buildings or parking area shall be permitted within a required buffer yard.

4. Screening within the perimeter setback area shall consist of a berm, trees, densely planted hedge, massing of shrubs, and may include a masonry wall and other plant material installed in a manner so as to inhibit public views of the parking area. Landscape materials in perimeter parking areas shall include plants that are salt-tolerant and provide year-around screening. The surface of the perimeter setback area shall be suitably covered with grass, ground cover or similar vegetation and periodically mulched. Impervious materials such as asphalt, concrete or a layer of stone is prohibited. The landscape buffer shall not be used for the purposes of

DRAFT

parking, loading, servicing, or storage.

a. Landscape Requirements for Parking Lots Facing Public Streets and Residential Districts. Landscaping materials within perimeter parking setback areas facing a public street shall contain the following minimum number of plant materials:

    1. Evergreen trees: 1 tree/20 lineal ft.
    2. Evergreen shrubs: 1 shrub/4 lineal ft.
    3. Deciduous shrubs: 1 shrub/4 lineal ft.
    4. Ornamental trees: 1 tree/25 lineal ft.
    5. Shade trees: 1 tree/50 lineal ft.

b. Landscape Requirements for Parking Lots Not Facing a Public Street or a Residential District. Landscaping materials within perimeter parking setback areas not facing a public street may be reduced by 30% as required in Section E.4.a. above.

c. Where a fence or masonry wall are provided to effectively screen parking areas, plants providing year-around screening may be reduced.

d. The minimum berm height shall be 30 inches and shall have average height of five feet (5') with a 3:1 slope. Shrubs and other landscape material shall be planted on berms to provide seasonal color, and to ensure landscape screening is maintained between thirty-six (36") and forty-eight (48") inches height.

5. Perimeter screening of parking areas shall be continuous, except for breaks as may be permitted for pre-existing trees or planned additional trees, sidewalks, driveways and sight triangles.

6. Shrubs, hedges and other perimeter screening material shall be at least three (3) feet in height at time of installation.

7. The surface of the perimeter setback area shall be suitably covered with grass, ground cover or similar vegetation and periodically mulched where appropriate.

8. A six (6) inch continuous poured-in-place concrete curb shall separate all drive and parking surfaces from landscape areas, except where bio-filtration design requires breaks for water inflow.

F. Minimum Landscape and Screening Requirements for Parking Structures:

DRAFT

1. All parking structures shall be landscaped (which includes 1 or more berms) pursuant to a landscape plan prepared by a landscape architect to screen substantially the first level from adjacent streets and other uses. For any parking structure that is four (4) floors or less in height, the landscaped area must be a minimum of ten feet (10') in depth but must average fifteen (15) in depth for all screening. For any parking structure that is in excess of four (4) floors, the landscaped area must be a minimum of twenty feet (20') in depth. Any approved landscape plan required for screening of a parking structure must incorporate evergreens within the plantings and include a maintenance schedule to ensure that any damaged or dead trees, shrubs or ground cover shall be replaced promptly. Regular maintenance of these landscaped areas shall also be required.

G. Interior Landscaping Requirements

1. A planting island equal in area to a parking space shall be located at each end of a parking row, and after each fifteen (15) parking spaces within a parking row.

   a. The maximum spacing requirement between parking spaces and landscaped islands may be varied to allow for a lesser number of larger landscaped islands to be provided, which islands shall be of sufficient size to sustain a diversity of plant material and shall be designed and placed within the parking lot in a non-grid fashion in order to create relief in the monotonous layout of the parking lot.

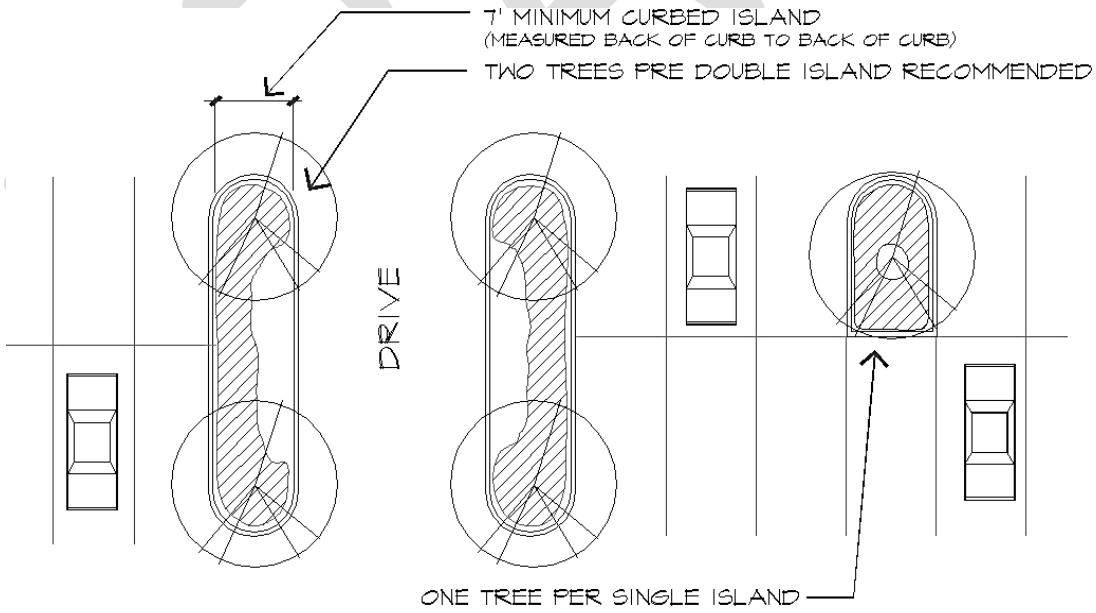

Example of a Planting Island Equal to a Parking Space

2. The total tree count shall be no less than one tree per five parking lot spaces.

3. Landscaped dividers or continuous islands with a minimum width of six (6) feet shall be provided between every three (3) parking bays.

   a. The installation of bio-filtration swales for landscaping and stormwater management purposes is encouraged within larger, continuous planning islands. Flood-tolerant plants should be used which will remain healthy when used in bioswales.

Example of a continuous bio-swale planting island.

   b. Continuous islands help divide large parking areas into smaller parking fields, provide more room for plants to grow, and provide areas for pedestrian access. Trees are recommended to be planted in the continuous landscaped island every 25' on-center.

Each parking island shall include at least one shade tree ~~or evergreen~~ [where visibility is not restricted]. At least fifty percent (50%) of the remaining portions of the surface of the planting island shall be covered with sod, plants with seasonal interest, low shrubs, and salt- tolerant ground cover. The remaining area shall contain landscape mulch. A layer of stone or impervious materials such as asphalt and concrete is prohibited.

4. A six (6) inch continuous poured in place curb shall separate and surround all interior landscape island areas, except when designed for bio-filtration purposes.

5. Except those designed as bio-infiltration islands, all landscaped islands shall have a minimum topsoil depth of three (3) feet and mounded to a center height which has a 1 to 3 percent slope above the top of the curb height.

H. Minimum Landscape Requirements for Foundations Plantings

DRAFT

1. For commercial construction, a minimum building foundation landscape area of five (5) feet in width shall be located immediately along the front and sides of all buildings, except for entryways.

2. A six (6) inch curb shall separate all foundation landscape areas from the drive aisle and parking areas.

3. Foundation landscaping shall include a minimum of 1 plant for each 3 lineal feet of the foundation, and shall include a variety of shade trees, ornamental trees, hedges, shrubs, evergreens and ground cover in a manner which accents building entranceways and architectural features, softens large expanses of building walls, and screens mechanical equipment. Landscaping can be linear or grouped.

I. Miscellaneous Landscape Requirements

1. Landscaping of Monument/Ground and Pole/Pylon Signs: For every one square foot of total sign area of the ground and pole sign, one square foot of landscaped area shall be extended at least three feet (3') beyond the sign faces or supporting structures in all directions.

   a. The landscaped area shall consist of plantings such as, but not limited to, shrubs, evergreens, flowering plants and ground cover plants. Landscaping bark, mulch, sod or seeded areas shall not be considered in calculating the square footage of the required landscaped area.
   b. Exposed sign foundations shall be constructed with a finished material such as brick, stone, architectural metal, exposed aggregate or wood. Plain, "bagged" or parged concrete is not an approved finish material.

   c. Landscaping must be maintained in a manner that prevents the screening or blocking of addresses and other information provided on the monument sign.

J. Landscaping and Screening of Ground Mounted Mechanical and Utility Equipment:

1. All ground mounted mechanical equipment, including heating and air conditioning units, generators and pool equipment shall be screened by a solid fence, wall, or densely planted evergreen landscape planting at a maximum height sufficient to obscure such equipment from view from all adjacent streets, and adjacent lots used for residential purposes.

2. All fences installed to satisfy the screening requirement shall comply with the regulations of Title 13, Chapter 3 (FenceType) and with all other applicable Village

Code regulations.

K. Water Supply; Underground Irrigation: A water supply to irrigate landscaping is required within one hundred fifty (150) feet of all landscaped areas. Installation of an underground irrigation system is recommended.

L. Changes to Approved Landscape Plan: Any change to an approved Landscape Plan shall require the prior approval of the Development Services department, or designee.

M. Landscape Maintenance Required:

1. Property Owners shall be responsible for ongoing maintenance, fertilization, repair and replacement of all vegetation, barriers and landscape planting materials. Landscaping should be properly maintained on a weekly or monthly basis (depending on the plantings) and include seasonal "clean- ups" in the spring and fall, to enhance the built environment in perpetuity.

2. Plants shall be regularly inspected for pests in accordance with Best Management Practices recommended by the Illinois Landscape Contractors Association.

3. Plants shall be pruned and litter removed in accordance with Best Management Practices recommended by the Illinois Landscape Contractors Association.

4. Replacement plantings shall be no less than the minimum required size or the size indicated in the approved Landscape Plan, whichever is greater.

5. The Property Owner shall make replacement plantings promptly after any plant has died but no later than one hundred twenty (120) days after notification by the Village of violation of this Ordinance, unless a time extension for inclement weather is given.

6. Planting beds shall be initially, and thereafter periodically, filled with soil and mulched in their entirety, with shredded bark or other organic equivalent.

7. Variations: A Property Owner may file an application for a variation when compliance with the requirements of this Chapter for a new or pre-existing building pose a practical hardship in accordance with the procedures and standards in Chapter 14 of Title 13 (Variations).

DRAFT

13-18-3: ENERGY CONSERVATION AND GREEN BUILDING

A. Energy Efficient Building Design:

1. Multiple-family, commercial, office and industrial construction of green buildings, including LEED certified buildings, is encouraged. All planned development shall comply with the requirements of Chapter 15, Section C.5 (13-15-3C.5)– Energy Efficient Building Design.

2. Energy conserving, energy efficient, and Energy Star products should be selected for non single- family buildings.

3. Building heating, cooling, and power should utilize solar, geothermal, wind, and bio-fuel resources where practical.

4. Construction, demolition, and land clearing debris should be salvaged, reused or recycled.

5. Roof structures with light colored materials to reduce energy loads and extend the life of the roof.

6. Green Roofs that incorporate vegetation on the roof assembly can lead to significant cost savings in thermal insulation, with the added advantages of stormwater runoff control, increased waterproof membrane life, sound insulation and a usable green space on the roof.

DRAFT

B. Site Design:

1. Integrate Natural Resources to ensure contiguous and well-planned open space and preservation of the site's natural resources. A planned development must provide, to the extent possible, for the preservation or creation of unique amenities such as natural streams, stream banks and shore buffers, wooded cover, rough terrain, man-made landforms or landscaping and similar areas.

Stormwater runoff is treated in a series of rain gardens within the parkway of this urban street section

2. The use of permeable paving systems or and naturalized stormwater management best practice systems is encouraged.

Permeable pavers

The bioswale filters runoff and reduces the amount of stormwater introduced into the underground sewer system

3. Incorporate transportation solutions that acknowledge the need for bicycle parking and carpool staging.

4. Designated parking, close to the primary building entrance, should be provided for energy-efficient cars and carpools.

5. Multifamily structures should incorporate Electric Vehicle chargers in design.

DRAFT

VILLAGE OF OAK BROOK
Planning & Zoning Commission

STAFF REPORT

DATE: July 12, 2024

CASE NO: 2024-10-ZO-TA

DESCRIPTION: Universal Text Amendment to Zoning Regulations

PETITIONER: Village of Oak Brook

ADDRESS/LOCATION: NA

EXISTING ZONING: NA

At the Planning & Zoning Commission meetings in May and June the Commission discussed the May 8, 2024 draft of the Universal Code amendments. At the July 17, 2024 meeting the Commission will continue to discuss the chapters.

Addendum to the P&Z Discussion:

The proposed language is attached, dated July 12, 2024, text that has been added is red and underlined and text that is being deleted has been ~~stricken out~~. Revisions to the May 8th Draft are highlighted in yellow.

Staff has additional revisions to Chapter 15 Planned Developments which we request the Commission consider.

1. The revisions remove references to the Commercial Areas Revitalization Plan (CARP) and replace it with the Comprehensive Plan. This is due to Ord.S-1647 which the Village Board passed in April of 2022 which suspended reliance on the CARP in favor of the 1990 Comprehensive Plan.

2. In addition, recent Planned Development applicants have been told during the Board's preliminary reviews that the applications would be referred to the P&Z Commission as a future step, however the PD regulations do not specifically state this procedural step. This is consistent with all other applications processed to the Commission and has been added.

3. Finally, wording within section 13-15-5(C.6) references a "resolution" rather than "findings" as the report forwarded from the P&Z Commission to the Village Board.

Staff looks forward to further discussions of all the proposed text revisions as we work to conclude the Commission's recommendations.

RESPONSIBILITIES OF HEARING BODIES:
The Planning & Zoning Commission (P&Z) have the responsibility to make a recommendation on the request for a text amendment to the Zoning Ordinance. Please include in your consideration, your findings with respect to the standards specified in the Zoning Ordinance for amendments.

As always, please contact staff if you have any questions prior to Wednesday's P&Z meeting.

Respectfully Submitted,

R. Von Drasek

Rama Raman

Rebecca Von Drasek
Development Services Director

Rama Raman
Village Planner

VILLAGE OF OAK BROOK
Planning & Zoning Commission

STAFF REPORT

DATE: August 1, 2024

CASE NO: 2024-10-ZO-TA

DESCRIPTION: Universal Text Amendment to Zoning Regulations

PETITIONER: Village of Oak Brook

ADDRESS/LOCATION: NA

EXISTING ZONING: NA

At the Planning & Zoning Commission meetings in May, June and July the Commission discussed the May 8, 2024 draft of the Universal Code amendments. At the August 7, 2024, meeting the Commission will continue to discuss the chapters.

Addendum to the P&Z Discussion:

The following is a study of municipalities conducted by the City of Warrenville, IL on Lot Coverage regulations. The research provides a summary on lot coverage regulations, exempted structures from lot coverage calculations, relief or special allowances, challenges in regulating and future modifications.

Also attached are staff calculations by the Village Engineer and Planner related to recent residential construction.

Finally, please note that Brookfield Properties provided a 2-page list of comments and staff would appreciate any further thoughts on those proposals. (See attached)

As discussed in the previous meeting, staff look forward to further discussions on Lot Coverage and Landscaping regulations as we work to conclude the Commission's recommendations.

RESPONSIBILITIES OF HEARING BODIES:
The Planning & Zoning Commission (P&Z) have the responsibility to make a recommendation on the request for a text amendment to the Zoning Ordinance. Please include in your consideration, your findings with respect to the standards specified in the Zoning Ordinance for amendments.

As always, please contact staff if you have any questions prior to Wednesday's P&Z meeting.

Respectfully Submitted,

Rebecca Von Drasek
Development Services Director

Rama Raman
Village Planner

CITY OF WARRENVILLE
MEMO

TO: Plan Commission/Zoning Board of Appeals
FROM: Andrew Kieffer, Planner/GIS Technician
Ron Mentzer, Community and Economic Development Director
Kristine Hocking, Senior Civil Engineer
SUBJECT: Municipal Lot Coverage Survey
DATE: January 19, 2022

BACKGROUND

"Lot Coverage," as defined within the City of Warrenville Zoning Ordinance, is the percentage of a lot covered by principal and accessory structures. Under Section 10-4 of our Zoning Ordinance, Maximum Lot Coverage requirements are codified as **Footnote (h)**, pursuant to **Table 4A: Residential District Requirements**:

(h) Unless otherwise approved by Planned Unit Development, the lot coverage in residential districts shall be as follows:

Lot Size	Max Lot Coverage
>= 30,000 sf.	18%
>= 14,000 sf. and < 30,000 sf.	22%
>= 10,000 sf. and < 14,000 sf.	26%
>= 7,000 sf. and < 10,000 sf.	30%
< 7,000 sf.	34%

*Including accessory buildings and structures, **except driveways and fences** shall be excluded from the lot coverage calculations. An additional 2% lot coverage shall be allowed for accessory structures that do not qualify as a principal or accessory building.*

Historically, this regulation has been implemented to mitigate "perceived clutter" and control storm water runoff on residential lots. In the past two years, the Plan Commission has expressed a desire to review and potentially modify lot coverage requirements to be more flexible and potentially less restrictive. Specifically, at the July 23, 2020 PC/ZBA meeting, lot coverage was identified as a high-priority text amendment by a number of Plan Commissioners. With the goal of implementing desirable lot coverage text amendments in advance of the upcoming spring construction season, staff has developed the text amendment timeline and process reflected in attached **Exhibit A.**

AREA MUNICIPALITY LOT COVERAGE SURVEY

As a first step in the "Research Stage" of this text amendment process, staff gathered input from area municipalities regarding their lot coverage regulations and experience administering their regulations. The survey methodology, response summary, staff analysis, and staff conclusions are enumerated below.

Methodology

As a part of this process, staff identified the following five questions, the answers to which will help inform decisions related to the scope and structure of any potential lot coverage related text amendments the City of Warrenville chooses to implement:

1. *Does your municipality currently regulate lot coverage on residential properties? If so, please provide a brief summary or a website link to those standards?*
2. *Are any buildings or accessory structures exempt from lot coverage calculations?*
3. *Is any relief or special allowances provided for pervious pavers? Are any other storm water BMPs integrated into your lot coverage regulation?*
4. *What, if any, challenges has your staff faced administering your lot coverage regulation?*
5. *Is your community considering any modifications/amendments to its existing lot coverage regulations?*

City staff then sent these questions to zoning staff in fifteen area municipalities. Nine provided a response. Their answers and qualitative responses are reflected in the following tables. Full responses are attached as **Exhibit B**. Staff then analyzed the response data to identify regulatory trends, which are used to support the conclusions reflected at the end of this memo.

Survey Results

Does your municipality currently regulate lot coverage on residential properties?		
Municipality	Yes/No?	Qualitative Response
Glen Ellyn	Yes	Maximum Lot Coverage is 15-20%, depending on Zoning District. Multi-Family is unregulated
Wheaton	Yes	It is 33.3% of the lot area, and it includes all roofed structures.
Naperville	Somewhat	Just Maximum Building Coverage: The maximum building coverage is 35%
Lisle	Yes	Maximum Lot Coverage is 34 -50%, depending on Zoning District
Itasca	Yes	Maximum Lot Coverage is 40%-67%, depending on Zoning District
St. Charles	Yes	Maximum Building Coverage and 30% Maximum for accesory structure in required rear yards
Carol Stream	Yes	Maximum Lot Coverage is 30-50%, depending on Zoning District.
Villa Park	Yes	Maximum Lot Coverage is 50-60%, depending on Zoning District.
Lombard	Yes	Maximum Lot Coverage is an average of approximately 50%, depending on zoning district

Are any buildings or accessory structures exempt from lot coverage calculations?		
Municipality	Yes/No?	Qualitative Response
Glen Ellyn	Yes	First 500 sq. feet of any detached garage, and 240/140 sq. feet of porch
Wheaton	Yes	All non-roofed structures are exempt from lot coverage calculations
Naperville	Yes	If under 500 sq ft., then detached accessory structures are exempt from max building calculation
Lisle	Yes	See full list on Exhibit B
Itasca	Yes	200/250 sq ft allowances for porches and detached garages, respectively
St. Charles	Yes	Paved area is not included in the calculation of building coverage or lot coverage.
Carol Stream	Yes	Driveways are exempt
Villa Park	Yes	Decks, with pervious surface underneath, and above-ground pools
Lombard	No	See Exhibit B

Is any relief or special allowances provided for pervious pavers? Are any other storm water BMPs integrated into your lot coverage regulation?		
Municipality	Yes/No?	Qualitative Response
Glen Ellyn	No	See Exhibit B
Wheaton	N/A	All non-roofed structures are exempt from lot coverage calculations
Naperville	No	See Exhibit B
Lisle	Yes	Permeable asphalt, concrete, or paver systems are exempt. The reduction in lot coverage calculation for green roof systems shall be equal to the total area of the green roof system.
Itasca	No	See Exhibit B
St. Charles	N/A	Paved area is not included in the calculation of building coverage or lot coverage.
Carol Stream	No	See Exhibit B
Villa Park	Yes	Pervious-pavers not included in calculation, based on interpretation of County Stormwater Ordinance
Lombard	No	See Exhibit B

Has your staffed faced any challenges administering your lot coverage regulation?		
Municipality	Yes/No?	Qualitative Response
Glen Ellyn	Yes	See Exhibit B
Wheaton	No	See Exhibit B
Naperville	No	See Exhibit B
Lisle	Yes	Decks and Swimming pools caused challenges, so they were exempted
Itasca	Yes	Permitting modern structures and amenities on city-style lots, which are historically small compared to the traditional suburban-style lots.
St. Charles	No	See Exhibit B
Carol Stream	Yes	A proliferation of parking pads has lead to their regulation under lot coverage requirements
Villa Park	No	See Exhibit B
Lombard	Few	Occasional permit denial

No community surveyed was actively considering any modifications/amendments to its existing lot coverage regulations.

Analysis

All nine communities have some form of lot coverage regulation, though some communities regulate lot coverage quite differently than Warrenville. Like the City, seven communities have codified regulation for cumulative lot coverage, where some differentiated between "Maximum Building Coverage" and "Maximum Accessory Coverage." Generally, most responding communities also have higher permitted Maximum Lot Coverage percentages than Warrenville, usually with codified ranges of approximately 35-60%. The only exception was Glen Ellyn, with a maximum lot coverage of 15-20%, depending on the zoning district. Warrenville currently has a codified range of 18-34%, which are applied based on lot size rather than zoning district. Every other responding community bases their lot coverage requirements on zoning district. Though this makes Warrenville unique, staff believes that regulating lot coverage based on lot size is most suitable for the City. Regulating based on zoning district could potentially lead to a proliferation of excessive accessory structures on large lots within the City.

Most communities surveyed exempt certain items from lot coverage calculations. Warrenville only exempts driveways from lot coverage calculations. Three other responding communities exempt driveways from their lot coverage calculations. Carol Stream does so explicitly, while two others simply do not included paved areas in their calculations at all. Decks and swimming pools are also exempted from lot coverage calculations in a number of the responding communities.

Only two responding communities, Lisle and Villa Park, explicitly exempt pervious pavers from lot coverage calculations. Two other communities, Wheaton and St. Charles, technically exempt

pervious pavers because paved areas are exempt from lot coverage calculations to begin with. Lisle is the only community that provides lot coverage relief for green roof systems, where the reduction in calculated lot coverage is equal in size to the green roof.

Staff Conclusions

As previously discussed, Warrenville's regulation of lot coverage has historically had a dual purpose: to mitigate excessive building and structure clutter, and control storm water runoff on residential lots. Given this balance, more flexibility can be provided within our regulation, but special care should be taken to ensure revised lot coverage regulations do not unintentionally contribute to the creation of new storm water management problems. Based on staff's analysis of the response data, staff offers the following conclusions for the Plan Commission's consideration:

1. The majority of responding communities have higher maximum lot coverage percentages higher than our own. If the Plan Commission desires to provide additional flexibility, there may be an opportunity to increase the City's permitted lot coverage percentages.
2. Unlike Warrenville, most responding communities do not exempt driveways from their lot coverage calculations. Driveways represent a significant amount of impervious cover on residential properties, thus integrating them into the City's lot coverage calculations may be advisable.
3. To provide an environmentally sustainable incentive, the City could potentially exempt pervious pavers and green roofs from lot coverage calculations. Providing this choice would provide the added benefit of providing homeowners increased flexibility for other accessory structures.
4. Some other communities provide other more generous exemptions, excluding accessory structures like decks and swimming pools from lot coverage calculations. This maybe an additional tool the City can use; however, if maximum allowable lot coverage percentages are increased, this may not be necessary or appropriate.

Plan Commission Prompts

Plan Commission feedback on the following questions will help staff prepare specific recommended revised Zoning Ordinance lot coverage amendments for Plan Commission consideration and a future Public Hearing:

1. In the past, the Plan Commission has generally expressed its desire to increase flexibility in the City's lot coverage so as to allow homeowners to add more structures on their properties. Does this remain the case?
2. Are there specific concepts presented in the Conclusion section of this memo that the Plan Commission supports or opposes?
3. Any additional comments, questions, or concern?

Naperville

1. Does your municipality currently regulate lot coverage on residential properties? If so, please provide a brief summary or a website link to those standards? We regulate lot coverage for tear down/infill projects:
   https://library.municode.com/il/naperville/codes/code_of_ordinances?nodeId=TIT6ZORE_CH2GEZOPR_6-2-26TEDOINRE
   We also regulate coverage of rear yard setback for detached accessory structures:
   https://library.municode.com/il/naperville/codes/code_of_ordinances?nodeId=TIT6ZORE_CH2GEZOPR_6-2-10ACBUSTUSLA
2. Are any buildings or accessory structures exempt from lot coverage calculations? For the lot coverage for tear down/infill development:

   Exclusions: In calculating the thirty-five percent (35%) coverage, the square footage of single story porches shall be excluded

   Credit: In calculating the thirty-five percent (35%) coverage, a credit up to a maximum of four hundred eighty (480) square feet shall be provided for detached garages. If the detached garage is located in part or whole, in the rear yard, it shall also comply with the twenty-five percent (25%) coverage limitation set forth in Subsection 6-2-10.5 of this Chapter.

   We only include the principal structure in lot coverage limits for this section of the code.

   For detached accessory structures in the rear yard: any unroofed brick paver or concrete patio which is less than five hundred (500) square feet in size shall be exempt from inclusion in this calculation.

3. Is any relief or special allowances provided for pervious pavers? Are any other storm water BMPs integrated into your lot coverage regulation?

   For detached accessory structures in the rear yard: any unroofed brick paver or concrete patio which is less than five hundred (500) square feet in size shall be exempt from inclusion in this calculation.

4. What, if any, challenges has your staff faced administering your lot coverage regulation? None that I am aware of
5. Is your community considering any modifications/amendments to its existing lot coverage regulations? Not that I'm aware of

Glen Ellyn

1. Does your municipality currently regulate lot coverage on residential properties? If so, please provide a brief summary or a website link to those standards?
Yes. Lot coverage is regulated on residential properties that are improved with single-family residences. The standards are as follows:
• RE Residential Estate District: 15 percent up to a maximum of 7,500 square feet for single family dwellings and accessory buildings. [Section 10-4-5(E)]

• R0, R1, R2, R2B, and R3 Residential Districts: 20 percent for single-family dwellings, more than one story, and accessory buildings and 35 percent for one-story single-family dwellings and accessory buildings. [Sections 10-4-(6,7,8,9,10)(E)]
Multiple-family dwellings are not governed by lot coverage standards unless they are part of a planned unit development (PUD).

2. Are any buildings or accessory structures exempt from lot coverage calculations?

Yes. The Village Zoning Code offers the following lot coverage ratio bonuses for detached garages and front open porches:

• The first 500 square feet of the area of any detached garage shall be excluded from the lot coverage ratio calculation.

• The first 240 square feet of a porch, located in the front yard or in the corner side yard, which has a minimum depth of six feet with no more than one side of the porch enclosed by a vertical wall, shall be excluded from the lot coverage ratio;

Or

• The first 140 square feet of the area of a porch, located in the front yard or in the corner side yard, which has a minimum depth of six feet and is open on at least two sides shall be excluded from the lot coverage ratio. [Sections 10-4-(5,6,7,8,9,10)(E)]

3. Is any relief or special allowances provided for pervious pavers? Are any other storm water BMPs integrated into your lot coverage regulation?

Glen Ellyn regulates lot coverage and impervious surface coverage separately. Lot coverage only includes the gross horizontal area of the footprint of all buildings and covered or roofed structures on a zoning lot while any solid material supported by the surrounding ground is considered impervious surface such as compacted gravel or limestone, concrete, brick, paver stone or asphalt. To the best of my knowledge, no relief or special allowances is provided for pervious surfaces as it relates to lot coverage.

Besides lot coverage set forth in the Zoning Code, all projects will be reviewed by the Village Engineer to ensure compliance with the DuPage County Stormwater and Floodplain Ordinance.

4. What, if any, challenges has your staff faced administering your lot coverage regulation?

As mentioned earlier, the Village provide bonuses for LCR, which allows the first 500 square feet of the area of any detached garage to be excluded from the lot coverage ratio calculation. Detached garages tend to create long driveways that would lead to more impervious surface coverage.

To ensure LCR standards are fully met, staff utilizes Bluebeam Revu to digitally calculate lot coverage.

5. Is your community considering any modifications/amendments to its existing lot coverage regulations?

To the best of my knowledge, at this point, there are no modifications/amendments planned for the lot coverage regulations. It is important to note that the Village has recently revisited the lot coverage regulations and amended the variation process to allow frequent minor zoning reliefs from lot coverage standards to be handled administratively, provided that the requested relief is less than or equal to ten percent of the lot coverage ratio requirement on structures greater than one-story. [Section 10-10-12

Itasca

1. Does your municipality currently regulate lot coverage on residential properties? If so, please provide a brief summary or a website link to those standards?

Zoning District	Minimum Lot Size	Maximum Lot Coverage
R-1 (Large Lot Single-Family)	16,000 sf.	40%
R-2 (Single-Family)	9,100 sf.	50%
R-3 (Multi-Family)	Dependent on Type of Multi-Family	67%

2. Are any buildings or accessory structures exempt from lot coverage calculations?

   In the R-2 District, the following Lot Coverage Allowances/Bonuses are granted if the structure meets all other zoning bulk standards:

   A. Front- or Corner-Side Yard Porch: 200 sf.
   B. Detached Garage: 250 sf.

3. Is any relief or special allowances provided for pervious pavers? Are any other storm water BMPs integrated into your lot coverage regulation?

   No allowances are granted towards zoning lot coverage calculation for usage of pervious materials. Pervious materials does provide credit towards BMP calculation if required per DuPage County Countywide Stormwater Ordinance, the Village of Itasca is a partial waiver community.

4. What, if any, challenges has your staff faced administering your lot coverage regulation?

   Permitting modern structures and amenities on city-style lots, which are historically small compared to the traditional suburban-style lots.

5. Is your community considering any modifications/amendments to its existing lot coverage regulations?

   Not at this time.

Carol Stream

1. Does your municipality currently regulate lot coverage on residential properties? If so, please provide a brief summary or a website link to those standards? Yes – see the table below. Lot coverage is used in residential districts, and FAR is used in business and industrial districts.
2. Are any buildings or accessory structures exempt from lot coverage calculations? Here's our definition - *LOT COVERAGE. The part or percent of the lot occupied by impervious surface, not including driveways but including parking pads.* (see drawing below for parking pad criteria).

3. Is any relief or special allowances provided for pervious pavers? Are any other storm water BMPs integrated into your lot coverage regulation? Not at this time, but that's an interesting idea.
4. What, if any, challenges has your staff faced administering your lot coverage regulation? Our biggest issue had to do with parking pads, which is why we included them in lot coverage in the UDO. We were seeing an increase in the number of permits for parking pads, and some of them were too large for the neighborhood from an aesthetics perspective (parking big boats, RVs, etc.). But since we didn't include driveways in the lot coverage percentage, there wasn't much we could do.
5. Is your community considering any modifications/amendments to its existing lot coverage regulations? Already did! Some lot coverage percentages were tweaked as part of the UDO project. And the inclusion of parking pads in lot coverage has helped with that issue.

Villa Park

1. Does your municipality currently regulate lot coverage on residential properties? If so, please provide a brief summary or a website link to those standards? – Yes, https://library.municode.com/il/villa_park/codes/code_of_ordinances?nodeId=MUCO_APXCBAZOOR_ART2REDI Please note maximum lot coverage was updated on 12/13/2021 and has not be codified yet. (RS-10 – 50%, RS-7.5 – 60%, RD-7.5 – 60%, RM-9 – 50%)
2. Are any buildings or accessory structures exempt from lot coverage calculations? – Only decks, attached or detached, with pervious surface underneath; above-ground pools are historically excluded.
3. Is any relief or special allowances provided for pervious pavers? Are any other storm water BMPs integrated into your lot coverage regulation? – We follow DuPage County interpretation – permeable pavers installed in accordance with manufacturer's specifications and meeting or exceeding DuPage County detail/cross-section are considered pervious and are excluded from the lot coverage calculations. No other BMPs are integrated into the lot coverage regulations.
4. What, if any, challenges has your staff faced administering your lot coverage regulation? – No challenges.
5. Is your community considering any modifications/amendments to its existing lot coverage regulations? – Some modifications were approved by the Village Board on 12/13/2021; no additional modifications are planned at this time.

Wheaton

1. Does your municipality currently regulate lot coverage on residential properties? If so, please provide a brief summary or a website link to those standards?

Yes, we have a lot coverage limit. It is 33.3% of the lot area, and it includes all roofed structures.

2. Are any buildings or accessory structures exempt from lot coverage calculations?

No buildings or accessory structures are exempt from the lot coverage regulations, it includes all roofed structures.

3. Is any relief or special allowances provided for pervious pavers? Are any other storm water BMPs integrated into your lot coverage regulation?

No special allowances for permeable pavers and no BMP's are integrated into the lot coverage regulations.

4. What, if any, challenges has your staff faced administering your lot coverage regulation?

None.

5. Is your community considering any modifications/amendments to its existing lot coverage regulations?

Not at this time.

Lisle

1. Does your municipality currently regulate lot coverage on residential properties? If so, please provide a brief summary or a website link to those standards? Yes, ranges from 34% to 50%. See image below.
2. Are any buildings or accessory structures exempt from lot coverage calculations? Yes, exemptions are as follows:
    a. Swimming pools and spas
    b. Decks
    c. Permeable asphalt, concrete, or paver systems
    d. Landscape rock beds
    e. The lot coverage calculation shall be reduced for principal or accessory buildings improved with green roof systems. The reduction shall be equal to the total area of the green roof system.
    f. Public improvements
    g. The maximum lot coverage calculation for planned unit developments containing residential uses approved prior to November 6, 2006 shall only include the principal building, accessory buildings, and driveway
    h. Like-for-like driveway replacements
3. Is any relief or special allowances provided for pervious pavers? Are any other storm water BMPs integrated into your lot coverage regulation? Permeable pavers are exempt. BMPs are not integrated into the lot coverage regulations. The only option for relief is a variance process.
4. What, if any, challenges has your staff faced administering your lot coverage regulation? Decks and swimming pools are a challenge – staff was able to exempt them to try and increase flexibility.
5. Is your community considering any modifications/amendments to its existing lot coverage regulations? See comments at beginning.

St.Charles

6. Does your municipality currently regulate lot coverage on residential properties? If so, please provide a brief summary or a website link to those standards?
St. Charles imposes a building coverage limitation as opposed to FAR. The percent allowable building coverage depends on the zoning district (Table 17.12-2 Residential District Bulk Requirements).

Building coverage is defined as follows:

> *A measure of intensity of land use that represents the portion of a site that is covered by a principal building or buildings including attached garages and enclosed porches, and accessory buildings including detached garages and any other enclosed accessory building in excess of 150 square feet of Lot Coverage. Building coverage shall also include cantilevered portions of a building that extend beyond the footprint of a structure, including portions cantilevered over an open front porch. Building Coverage shall be measured at the outer edge of the foundation line, or at the outer wall surface support column in the case of a post, other non-continuous foundation, or cantilever, excluding projections for bay windows or chimneys. Building coverage shall not include unenclosed porches, decks, or unenclosed accessory structures such as gazebos, swimming pools, or tennis and sports courts.*

A lot coverage limitation applies to accessory buildings and structures within rear yards (Section 17.22.020.A):

> *The combined lot coverage of all detached accessory buildings and structures located within a required rear yard shall not occupy more than thirty percent (30%) of the required rear yard. For lots within an RT district, if a detached garage is provided in lieu of an attached garage, all structures in the rear yard may occupy up to 40% of the required rear yard.*

Lot coverage is defined as follows:

> *A measure of intensity of land use that represents that portion of the horizontal area of a lot that is covered by the principal building or buildings and accessory buildings and structures, including but not limited to:*
>
> 1. *Attached and detached garages (measured at the foundation)*
> 2. *Accessory sheds (measured at the outer wall surface)*
> 3. *Gazebos and cabanas (measured at the outer wall surface)*
> 4. *Enclosed and Unenclosed Porches (measured at the outer edge of the foundation line, or at the outer wall surface or support column in the case of a post or other non-continuous foundation)*
> 5. *Decks and accessibility ramps (measured at the outer limits of the deck or ramp surface)*
> 6. *Swimming pools (measured at the outer edge of the pool deck)*
> 7. *Tennis courts and sports courts (measured at the outer edge of the court surface)*

Unless a stormwater permit is needed (not typically required for residential lots unless a very large lot/home), there is no limitation on impervious area except the building coverage/lot coverage provisions above.

7. Are any buildings or accessory structures exempt from lot coverage calculations?

See definitions above.

8. Is any relief or special allowances provided for pervious pavers? Are any other storm water BMPs integrated into your lot coverage regulation?

   Paved area is not included in the calculation of building coverage or lot coverage. Only setback requirements limit the extent of pavement on typical residential lots.

9. What, if any, challenges has your staff faced administering your lot coverage regulation?

   Our provisions are fairly straightforward; administration has not been an issue. We are aware that our lack of regulations limiting paved area is more permissive than neighboring communities. This has led to some neighbor complaints in situations where a homeowner chooses to pave large portions of their lot. However, these occasions are relatively rare.

10. Is your community considering any modifications/amendments to its existing lot coverage regulations?

Lombard

1. Does your municipality currently regulate lot coverage on residential properties? If so, please provide a brief summary or a website link to those standards? Yes. The majority of our single-family homes are zoned R2 and open space is 50%.
   R0: 67%
   R1: 50%
   R2: 50%

   R3: 50% for detached SF and two family; 35% for attached SF

   R4: 50% for detached SF and two family; 35% for attached SF, 40% for multi family

   R5: 50% for detached SF and two family; 35% for attached SF, 40% for multi family

   R6: 50% for detached SF and two family; 35% for attached SF, 15% for multi family

2. Are any buildings or accessory structures exempt from lot coverage calculations? No
3. Is any relief or special allowances provided for pervious pavers? Are any other storm water BMPs integrated into your lot coverage regulation? No. All that is under engineering, lot coverage is under planning.
4. What, if any, challenges has your staff faced administering your lot coverage regulation? Not a lot. Occasionally we have to deny a permit cause of open space. I think we've had 1 variance in my time here. The SF home and associated development was already over 50%, however, with an addition, moving the garage, etc. they were able to reduce the amount of lot coverage, but it was still over 50%.
5. Is your community considering any modifications/amendments to its existing lot coverage regulations? No.

I’ll add…

NEW RESIDENTIAL SINGLE FAMILY - 2023

LOT COVERAGE

ISSUED	PERMIT #	ADDRESS	ZONING DISTRICT	LOT AREA (SF)	PRINCIPLE STRUCTURE (SF)	LOT COVERAGE (%)	AVERAGE	BUILDABLE AREA (SF)	BUILDABLE AREA LOT COVERAGE (%)	AVERAGE	NOTES
2/27/2023	22-1-913	27 CAMBRIDGE DR	R-4	17,014	4,282	25.17		8,589	49.85		40' front BL on subdivision plat. Measured at 30' BL per zoning ordinance.
3/10/2023	23-1-013	9 WINDSOR DR	R-3	21,875	6,133	28.04		9,570	64.09		Includes porch
3/22/2023	22-1-947	6 BRIGHTON LN	R-3	22,281	3,985	17.89		10,699	37.25		
4/7/2023	22-1-020	4014 ADAMS RD	R-2	28,314	3,629	12.82		7,171	50.61		Residential alteration. Exisitng structure at 15.77' front setback and 37'-10 1/4" rear setback.
4/10/2023	22-1-848	1020 35TH ST	R-1	78,710	6,139	7.80		30,151	20.36		
5/2/2023	23-1-042	5 ROYAL VALE DR	R-2	51,401	6,058	11.79		27,716	21.86		
5/11/2023	22-1-821	408 CANTERBERRY LN	R-2	43,558	7,054	16.19		16,064	43.91		
5/24/2023	22-1-961	26 YORKSHIRE WOODS	R-3	15,981	3,687	23.07		6,482	56.88		
6/7/2023	22-1-702	16 TEMPLETON CT	R-1	91,829	6,299	6.86		37,033	17.01		
6/28/2023	22-1-746	1 TEMPLETON DR	R-1	110,642	5,525	4.99		40,900	13.51		
7/27/2023	BP-23-202	121 INDIAN TRAIL RD	R-2	45,738	4,738	10.36		16,143	29.35		
8/11/2023	BP-23-122	402 LUTHIN RD	R-2	39,043	3,751	9.61		18,792	19.96		
8/11/2023	22-1-070	3024 MEYERS RD	R-2	20,488	2,899	14.15		3,890	74.52		
8/22/2023	BP-23-233	2903 OAK BROOK HILLS RD	R-2	114,024	5,263	4.62		27,450	19.17		
							13.81			37.02	

NEW RESIDENTIAL SINGLE FAMILY-2024

LOT

COVERAGE

ISSUED	PERMIT #	ADDRESS	ZONING DIST	LOT AREA (SF)	PRINCIPLE STRUCTURE (SF)	LOT COVERAGE (%)	AVERAGE	BUILDABLE AREA (SF)	BUILDABLE AREA LOT COVERAGE (%)	AVERAGE	NOTES
1/16/2024	BP-23-429	3712 ADAMS RD	R-1	101,228	8,841	8.73		37,518	23.56		
1/26/2024	BP-23-600	12 HUNT CLUB LANE	R-1	86,972	12,126	13.94		33,613	36.08		
1/29/2024	BP-23-617	31 ROBINHOOD RANCH	R-2	24,072	4,808	19.97		6,423	74.86		Setback variation
2/5/2024	BP-23-491	222 OAKBROOK RD	R-1	91,019	7,175	7.88		32,305	22.21		
2/6/2024	BP-23-609	13 TEMPLETON DR	R-1	140,237	6,837	4.88		55,485	12.32		
3/5/2024	BP-23-713	2901 AVE. LORIE	R-2	43,585.91	5,497.68	12.61		18,183	30.24		
4/11/2024	BP-23-803	3 BERSEEM CT	R-2	41,205	3,447	8.37		19,095	18.05		
5/31/2024	BP-23-239	4 TEMPLETON DR	R-1	93,572	6,010	6.42		25,765	23.33		
							10.35			30.08	

ADDRESS	PERMIT NO.	HOUSE AREA (SF)	LOT COVERAGE (SF)	LOT AREA (SF)	HOUSE AREA %	LOT COVERAGE %
2505 35th Street	17 1 204	11,814	25,501	44,870	26%	57%
2901 Avenue Loire	BP 23 713	5,498	12,790	43,586	13%	29%
36 Baybrook Lane	18 1 693	4,935	11,975	45,192	11%	26%
48 Baybrook Lane	22 1 683	5,629	11,486	32,741	17%	35%
59 Baybrook Lane	15 1 747	6,196	12,373	34,047	18%	36%
61 Baybrook Lane	17 1 384	5,231	8,551	33,295	16%	26%
1017 Birchwood Road	21 1 885	5,778	11,710	44,602	13%	26%
6 Brighton Lane	22 1 947	3,985	5,994	22,281	18%	27%
27 Cambridge Drive	22 1 913	4,282	7,083	17,218	25%	41%
408 Canterberry Lane	22 1 821	7,055	10,615	43,558	16%	24%
16 Carlisle Drive	16 1 693	4,660	8,822	21,789	21%	40%
3 Charleton Place	17 1 714	4,307	8,497	25,550	17%	33%
39 Chatham Lane	22 1 615	4,553	9,101	21,930	21%	42%
43 Chatham Lane	17 1 895	4,094	8,335	21,973	19%	38%
3020 Coolidge Street	BP 24 254	3,014	4,955	27,005	11%	18%
10 Deerpath Lane	18 1 888	7,907	22,860	81,893	10%	28%
15 Deerpath Lane	16 1 859	7,671	20,261	124,582	6%	16%
19 Devonshire Drive	22 1 344	4,637	7,660	22,000	21%	35%
240 Forest Trail	16 1 041	3,250	9,450	29,621	11%	32%
9 Gateway Lane	16 1 480	5,580	8,422	32,212	17%	26%
3001 Grant Street	16 1 777	3,520	6,864	20,909	17%	33%
121 Green Leaf Drive	17 1 040	2,790	5,855	20,000	14%	29%
12 Hamilton Lane	22 1 786	3,839	5,714	18,700	21%	31%
7 Hampton Drive	17 1 364	4,480	9,656	22,898	20%	42%
12 Hunt Club Lane	BP 23 600	12,126	20,224	86,972	14%	23%
3050 Hunt Club Lane	BP 24 148	6,751	16,608	45,427	15%	37%

Text of 5/24 Draft	*Retail/Operational Concerns*	Proposed Text
Business District Characterizations (13-7-2)		
B2 Regional Shopping Center District – This district focuses on providing a large range of retail sales opportunities to the regional population. This includes "big box" and specialty stores located at a central location which is accessed by automobile.	*B2 description does not adequately describe the breadth of uses at Oak Brook Center.*	B2 Regional Shopping Center District – This district focuses on providing a centralized area along major automotive corridors offering a diverse range of retail, service, dining, entertainment, hospitality, fitness, health, and office facilities for local and regional populations.
Shared Parking (13-12-3N)	*None at this time, and think this is an excellent addition. Thank you!*	N/A
"Showrooms" (Section 13-2-2)		
SHOWROOM – FINAL DEFINITION TO BE DETERMINED Showroom – Any location that: (1) displays or otherwise promotes (physically or electronically) merchandise available for sale; and (2) where more than 10% of annual gross sales (measured by dollar volume) of merchandise so displayed to patrons at such location are not subject to local Retailers Occupation Tax (as set forth in Section _____) at such location. OR Showroom: means any physical business establishment or facility operated by a retailer engaged in the sale of tangible personal property, whether for or not for profit, that maintains limited to no available stock or supply of the tangible property being offered by the retailer on-premises, with the purpose of facilitating or engaging in any variation of on-premises selling activities--ranging from the preparation for, and the obtaining of, orders of such to the final consummation of the sales transaction --with the target consumer through means such as, but not limited to the display, showcasing, marketing, or testing of the type of tangible property being offered and of its related counterparts.	*Obtaining and measuring gross sales will not be workable given the complexities and constant evolution of how retailers blend brick & mortar with e-commerce channels. And, essentially, every new store at Oakbrook Center would have to go through this administrative Special Use analysis before knowing whether or not the Village deemed the store to be a Permitted or Special Use. This will cause delays and burdens for Village staff, stores, landlords, potentially slowing or killing store leasing and openings (as well as potentially slowing the generation of sales tax from the opening of new stores). Finally, to our knowledge, this would also be an administrative burden, unique to Oak Brook or extremely rare.* *"limited to no available stock or supply of the tangible property" is still problematically vague, but less so than a sales test. The proposed text to the right builds on this concept but makes it easier and faster to implement.* *With either definition, the legality may be questionable, especially given that numerous allowable uses throughout the Village do not generate any sales or other taxes?? Also, it's not clear how Showrooms would constitute a potential nuisance justifying their classification as a Special Use under 65 ILCS 5/11-13-1.1:* *"The corporate authorities of any municipality may in its ordinances passed under the authority of this Division 13 provide for the classification of special uses. Such uses may include but are not limited to public and quasi-public uses affected with the public interest, uses which may have a unique, special or unusual impact upon the use or enjoyment of neighboring property, and planned developments."??* *If the Village does proceed with incorporating a definition, we propose using the one to the right, because at least it can be more clearly administered.*	Electronics Retailer: means a business establishment specializing in the sale of consumer electronic goods, services, software, and devices, such as televisions, computers, tablets, watches, audio and video equipment, smartphones, virtual reality devices, cameras, and related accessories and merchandise. An Electronics Retailer also may offer repair services and technical support for customers. Showroom: means any physical business establishment that is operated by a retailer other than an Electronics Retailer and meets at least one of the following criteria: (i) Public floor area is used exclusively for display, demonstration, showcasing, marketing, and testing of tangible personal property, including the facilitation (but not completion) of sales; (ii) There is no store-room and no on-premises stock available for sale; (iii) There is no on-site equipment (whether affixed or portable) designed or used for completion of sales transactions or handling payments.
Mobile Food Vending/Outdoor Activities (Sections 13-3-18 and Section 13-7-5)		
13-7-5: OUTDOOR SALES AND USES ~~B~~A. All business, service, storage, merchandise, display and where permitted, repair and processing shall be conducted wholly within a completely enclosed building except for: 1. Off street automobile parking, off street loading, and open sales lots and drive-in facilities in districts where they are permitted; 2. Outdoor dining areas adjacent to restaurants in districts where outdoor dining areas are ~~a~~ permitted ~~use;~~ and approved by the Development Services department; 3. Approved specialty retail programs in outdoor areas of a shopping center in districts where permitted as ~~a special use;~~ approved by the Development Services department; 4. Outdoor sales events on a property in any business district provided that all of the following conditions are met: a. Any such use shall require the specific prior approval of the Development Services department on the basis of the adequacy of the lot size, parking provisions, and traffic access and the absence of undue adverse impact on other properties. Such event shall be of a limited duration (14 days or less per event) occurring no more than two (2) times in any calendar year; and ~~b. Such event is held in a temporary enclosure that received all required permits from the village; and~~ ~~c~~b. Such event offers for sale only items that are normally sold inside the building in conformity with the principal use of the subject property; and ~~d~~c. Such event conforms to all signage and setback requirements of the underlying zoning district; and ~~e~~d. The property complies with all parking requirements of the underlying district, or, in the alternative, the petitioner reasonably demonstrates that notwithstanding any temporary noncompliance, the conduct of the event will not impose any undue traffic or parking burden on surrounding properties and streets; and ~~f~~e. Such event is approved by the ~~village board of trustees~~ Development Services department upon petition or request from the property owner detailing prospective compliance with the conditions herein~~; and~~ ~~5. Farmers' markets and/or French markets involving the sale of flowers, culinary accessories and edible items for consumption off the premises where the sale is made in districts where permitted as a special use.~~ 5. Mobile Food Vendors/ Food Trucks are prohibited in the Village of Oak brook with the exception of special events as defined under, Chapter 12, Section 4-12-2.	*One of the critical benefits of Oakbrook Center is its interior, open-air areas and their blend of landscaping, walkways, pavilions, dining, movies, and Specialty Retail. There is a specific Planned Development in place regulating this interior. Also, our understanding is that concerns with outdoor dining have related primarily to safety for diners and staff relative to any adjacencies to areas where vehicles are circulating and/or parking. That issue is moot for the interior of the Center. Likewise, outdoor reading within the interior of the Center that are invisible to public rights of way do not impact the public realm and should be encouraged.* *Again, see 65 ILCS 5/11-13-1.1:* *"The corporate authorities of any municipality may in its ordinances passed under the authority of this Division 13 provide for the classification of special uses. Such uses may include but are not limited to public and quasi-public uses affected with the public interest, uses which may have a unique, special or unusual impact upon the use or enjoyment of neighboring property, and planned developments."??*	13-7-5: OUTDOOR SALES AND USES A. All business, service, storage, merchandise, display and where permitted, repair and processing shall be conducted wholly within a completely enclosed building except for: … 2. Outdoor dining that is a Permitted Use in the applicable District, is an approved Special Use, or is entirely surrounded by buildings such that the dining uses are not visible to public rights of way. 3. Specialty Retail Programs in the B2 District approved as a Special Use or Planned Development. … 5. Mobile Food Vendors/ Food Trucks that are either (a) part of an approved Special Event (as defined under, Chapter 12, Section 4-12-2) or (b) operating within an area that is surrounded by buildings such that the Mobile Food Vendors/Food Trucks are not visible to public rights of way when conducting sales. [A related suggestion is to exempt interior areas from the Section 13-7-7.B.4 prohibition against having live entertainment in outdoor dining areas so long as the live entertainment is not visible or audible to public rights-of-way]

Text of 5/24 Draft	*Retail/Operational Concerns*	Proposed Text
Planned Development Minor Changes (Section 13-15-8)		
[B] "…The Director of Development Services shall make a written recommendation (the "Written Recommendation") to the Village Manager who shall then submit the Minor Change Request and Written Recommendation to the Village President and Board of Trustees …."	*Applicants should have the option to go through the PD amendment process, even if their proposal might qualify as a Minor Change (in order to avoid the delay and expenses of the new process).*	TBD
[D] "…The following changes shall be deemed to be material for purposes of this section and specifically excluded from the scope of an Administrative Change or a Minor Change: 1. Any increase the planned development's density (including but not limited to FAR or Lot Coverage); 2. Any addition of any new uses not otherwise permitted by the underlying Zoning District; 3. Any increase in any applicable bulk regulation; 4. Any reduction in open space; 5. Any modification of the proportion of units and/or bedroom counts 6. Any change to, addition or removal of any new parking areas 7. Any alteration of the alignment of roads or above-ground utilities; 8. Any amendment of final development agreements, provisions or covenants 9. Any sign not permitted by the Sign Code 10. Any electrical box, gas line, meter, emergency exit door, or other such feature facing an entrance or public street which is not fully screened in a year-round manner; 11. Any other change inconsistent with any standard or condition imposed by the corporate authorities in approving the planned development."	*In order to avoid unnecessary procedural delays and to be more aligned with standard municipal zoning practices, we suggest that the certain triggers be modified.* *The terminology of density, bulk regulation, FAR and lot coverage is confusing. Typically, we've seen Bulk Regulation as a defined term specifically meaning maximum height, minimum setbacks, maximum residential density, maximum floor area ratio, and maximum lot coverage.* **FOR CONVENIENCE, ONLY, WE HAVE NUMBERED THE TRIGGERS. THEY ARE BULLETED IN THE DRAFT.** *A much larger question is how this Section may need to be modified in the event that Oak Brook Center has a Master Planned Development. We will need to carefully structure Sub-Areas so that we all have the option of Sub-Area modifications that do not trigger Major Change/Minor Change/Administrative Adjustment analysis for the entire center, every single time.*	[D] …The following changes shall be deemed to be material for purposes of this section and specifically excluded from the scope of an Administrative Change or a Minor Change: 1. Any increase to the planned development's density (including but not limited to FAR or Lot Coverage) greater than ____ percent above the maximum established in the current planned development ordinance; 2. Any addition of any new uses not otherwise permitted by the underlying Zoning District; 3. Any increase in any applicable bulk regulation greater than ____ percent above the maximum established in the current planned development ordinance; 4. Any reduction in open space greater than ____ percent below the minimums established in the current planned development ordinance; 5. Any modification of the proportion of units and/or bedroom counts 6. Any reduction in parking greater than ___ percent below the minimums established in the current planned development ordinance. ~~7. Any alteration of the alignment of roads or above-ground utilities;~~ 8. Any amendment of final development agreements, provisions or covenants approved in conjunction with the current planned development ~~9. Any sign not permitted by the Sign Code~~ 10. Removal of year-round full-screening requirements for any electrical box, gas line, meter, ~~emergency exit door~~, or other such feature ~~facing an entrance or~~ that is visible from a public street ~~which is not fully screened in a year-round manner~~; 11. Any other change inconsistent with any express standard or condition imposed by the corporate authorities in approving the planned development.
Landscaping (Section 13-18-3)		
[D.3.] "Plantings on any portion of the public right-of-way provided by an adjacent property owner, association, or individual, that are removed as a result of Village utility construction or maintenance, or other Village activities, may be replaced at the sole responsibility of the property owner, association or individual. The Village shall not be required to replace any plant material in the public right-of-way."	*Seems like there should be (i) more collaborative approach; and (ii) no liability to a private property owner for landscaping requirements that were complied with except for the Village's removal.*	TBD
"E. Minimum Setbacks and Landscape Requirements for Off-Street Parking Lots: 1. Every off-street parking lot or parking area containing five (5) or more parking spaces shall be buffered and screened from public view and adjacent property by a berm and perimeter landscaped area in accordance with the yard setback requirements of Chapter 12, 13-12-3 H. (Off Street Parking Regulations). The minimum parking lot setbacks shall be maintained in accordance with the following Schedule…" "F. Minimum Landscape and Screening Requirements for Parking Structures: 1. All parking structures shall be…" "G. Interior Landscaping Requirements 1. A planting island equal in area to a parking space shall be located at each end of a parking row,…" "H. Minimum Landscape Requirements for Foundations Plantings 1. A minimum building foundation landscape area of five (5) feet in width shall be located immediately along the front and sides of all buildings, except for entryways…."	*We need further dialogue with the Village to craft appropriate triggers and exemptions from this new Chapter. Without careful clarifications, the consequences for the Center would be serious and exponential.* *For example, requiring project-wide landscaping updates for each individual project, however, small, will prevent incremental store updates in the normal course. What we typically see are triggers based on new construction or substantial renovations, and only with respect to a parking area equivalent or equal to the amount of parking for that new or substantially renovated structure.* *Substantively: (i) the parking structure and interior island requirements could substantially reduce the amount of available parking at Oakbrook Center, and (ii) the foundation plantings requirement does not make sense for many of our buildings, especially where there are outdoor dining areas, the foundations are only in the interior of the Center, etc…*	TBD

VILLAGE OF OAK BROOK
Planning & Zoning Commission

STAFF REPORT

DATE: August 14, 2024

CASE NO: 2024-10-ZO-TA

DESCRIPTION: Universal Text Amendment to Zoning Regulations

PETITIONER: Village of Oak Brook

ADDRESS/LOCATION: NA

EXISTING ZONING: NA

At the Planning & Zoning Commission meetings in May, June, July and August, the Commission discussed the May 8, 2024 draft of the Universal Code amendments. At the August 21, 2024, meeting the Commission will discuss finalizing the chapters.

Addendum to the P&Z Discussion:

Attached are comments provided by Commissioner Cappetta regarding Special Events.

Also attached are Brookfield Properties newly submitted comments regarding landscaping and parking. Staff would appreciate any further thoughts on those proposals.

As discussed in the previous meeting, staff looks forward to finalizing the Text Amendment to Zoning Regulations as we work to conclude the Commission's recommendations.

RESPONSIBILITIES OF HEARING BODIES:
The Planning & Zoning Commission (P&Z) have the responsibility to make a recommendation on the request for a text amendment to the Zoning Ordinance. Please include in your consideration, your findings with respect to the standards specified in the Zoning Ordinance for amendments.

As always, please contact staff if you have any questions prior to Wednesday's P&Z meeting.

Respectfully Submitted,

R. Von Drasek

Rama Raman

Rebecca Von Drasek
Development Services Director

Rama Raman
Village Planner

CAPPETTA & ASSOCIATES, LTD.
ATTORNEYS AT LAW

900 JORIE BLVD. - SUITE 204 - OAK BROOK, IL 60523-3844
Tel: 630-954-7474 Fax: 630-954-7746 email: law@cappetta.org

NATALIE CAPPETTA

OF COUNSEL:
SCOTT J. REINHARDT

OF COUNSEL:
RIZZO & DIERSEN, S.C.
ALSO LICENSED IN WISCONSIN
RACINE, LAKE GENEVA
BURLINGTON, KENOSHA

August 12, 2024

Mr. Michael Castaldo, III
Ottosen DiNolfo
Hasenbalg & Castaldo, Ltd.
1804 N. Naper Blvd., Suite 350
Naperville, IL 60563

Via Email only to: mcastaldo3@ottesenlaw.com

Re: Village of Oak Brook
Zoning Code revisions
Mobile Food Vending & Special Events

Dear Mike:

Sorry for the delay, but I have finally put my thoughts down on paper. Here is the issue I see with specifically the Taste of Oak Brook.

Taste of Oak Brook
4-12-2 (A) defines Special Event as:

> "…"special event" means an activity on village property or private property that is not sponsored in whole or in part by the village…"

Taste of Oak Brook is sponsored by the Village and therefore is NOT a special event as defined by 4-12-2(A).

4-12-2(C)(2) goes further to make it clear that the Taste of Oak Brook is not a special event. It states:

> "C. Exclusions: For purposes of this chapter, the following shall not be considered special events:
>
> … 2. Village sponsored or village cosponsored events which have officially been approved by the village board to be sponsored or cosponsored by the village."

It is clear that based upon those two definitions that the Taste of Oak Brook is NOT a special event. It is sponsored by the Village and it does not fit under the Exclusions.

The current proposed language for 13-7-5 Outdoor Sales and Uses discusses where Food Trucks are prohibited. Specifically 13-7-5(5) states:

> "5. Mobile Food Vendors/Food Trucks are prohibited in the Village of Oak Brook with the exception of special events as defined under Chapter 12, Section 4-12-2."

If I am correct and the Taste of Oak Brook is not a special event as defined in 4-12-2, then there can be NO mobile food vending at the Taste of Oak Brook because you can only have food trucks at special events.

Soccer Tournaments, etc.

The next similar issue is the Park District. I saw what I believe was a soccer tournament taking place on the soccer fields near the post office… maybe a month or two ago. There was a mobile food truck at the event. In order for a food truck to be permitted, the soccer tournament would have had to have been a special evert, which requires a permit.

4-12-2 (A) defines Special Event as:

> "…"special event" means an activity on village property or private property that is not sponsored in whole or in part by the village AND that requires the village to provide special services…"

Special services are defined at 4-12-2(B).

The soccer tournament would not have been sponsored by the Village, so it meets the beginning of the requirement, but I don't know if they met the 2nd part of the requirement. I don't know if any special services were provided by the Village.

4-12-2(C)(1) seems to make it clear that the Park District cannot have special events. It states:

> "C. Exclusions: For purposes of this chapter, the following shall not be considered special events:
>
> 1. A governmental agency, including, without limitations, the village, the Oak Brook park district… acting within the scope of its authority.

I think that perhaps the Park District having a soccer tournament would be acting within the scope of their authority and therefore NOT a special event.

Now the issue may be, was it the Park District running the soccer tournament, or did a soccer club rent the soccer fields and they ran the tournament. If it is a club renting the fields and running a tournament, then that may be a special event, but they would have to obtain a permit for the special event in order to have the event and a a food truck.

Permitting is discussed in 4-12-4. Specifically 4-12-4(A) states:

> A. Permit Application: All applications for special event permits shall be delivered to the village manager no less than ninety (90) days prior to the proposed special event.

The special event must also be accompanied by a Certificate of Insurance as defined in 4-12-4(E) and an Indemnification and Hold Harmless Agreement as defined in 4-12-4(F) unless specifically waived by the Village Manager.

Block Parties

And while we're in this area, section 4-12-6(A) discusses Block Parties and states:

> A. Temporary Use: A block party involving temporarily closing a public street or other right of way shall be considered a temporary use and not a special event. It shall be unlawful to conduct **or attend** any block party unless a block party permit has been issued in accordance with this section.

It seems unreasonable to say it is unlawful to **attend** a block party unless a block party permit has been issued. Is every attendee supposed to check and see if a permit was obtained? I don't like the "or attend" language in that section.

Not that I see a lot of block parties in Oak Brook, but since it is a Temporary Use and not a Special Event, then no food trucks are allowed.

I think I need to discuss with the board and staff more about what we are trying to accomplish with the food trucks. Do we want them, do we not want them?

And now I'm reconsidering the language that defines mobile food vending (Food Trucks) and requires that the mobile food vehicle must be owned and operated by the owner, or agent of a licensed food establishment in the Village and must be affiliated with that establishment. So you can't have an ice cream truck at your special event.... we don't have any ice cream stores in OB. I think we have gone too far. I believe that none of the restaurants in OB are in the regular business of mobile food. So a special event and mobile food from an OB restaurant would be cost prohibitive, and may not even be available except for the Taste of Oak Brook.

Very truly yours,

CAPPETTA & ASSOCIATES, LTD.

Natalie Cappetta

Natalie Cappetta

EXCERPTS from CHAPTER 12 in May 2024 Version

Comments:

Please note that no text amendments have been proposed to these particular Excerpts, whether by staff or Brookfield.

These Excerpts are included for reference, <u>since Chapter 12 was where the parking lot landscaping rules were previously located</u>.

Please see page 3 of this document for suggested continuation of the 13-12-1 protections with regarding to landscaping

13-12-1 : SCOPE OF REGULATIONS:

The off street parking and loading provisions of this chapter shall apply as follows, subject to the restrictions set forth in section 13-12-3 of this chapter:

A. Accessory off street parking and off street loading facilities shall be provided as required by the regulations of this chapter for all uses and structures established in each district after the effective date hereof. However, where a building permit has been issued prior to the effective date hereof, and construction is begun within ninety (90) days after such effective date and diligently prosecuted to completion, parking and loading facilities as required for the issuance of said building permit may be provided in lieu of any different amounts required by this chapter.

B. When the intensity of use of any structure or premises is increased through the addition of dwelling units, gross floor area or seating capacity parking and loading facilities for the addition shall be provided in the amount specified herein.

C. Whenever the existing use of a structure shall hereafter be changed to a new use, parking or loading facilities shall be provided as required for such new use. However, if the said structure was erected prior to the effective date hereof, additional parking or loading facilities are mandatory only in the amount by which the requirements for the new use would exceed those for the existing use, if the latter were subject to the parking and loading provisions of this chapter.

D. The design and engineering for all new or modifications to existing parking and loading facilities shall be approved by the village engineer prior to construction. (Ord. G- 687, 10-23-2001)

13-12-3 : OFF STREET PARKING REGULATIONS:

A. Existing Parking Facilities: Accessory off street parking facilities in existence on the effective date hereof and located on the same lot as the structure or use served shall not hereafter be reduced below the requirements for a similar new structure or use under the provisions of this chapter.

13-12-4 : DESIGN AND MAINTENANCE:
***

H. Parking Structures:

***

NEWLY-PROPOSED **H.3** (as included in the May 2024 draft)

3. Setbacks: For any parking structure that abuts a residential use/zoning district the setbacks shall be ten feet (10') plus two feet (2') for every one foot (1') in height above grade, up to a maximum setback of one hundred feet (100') for the parking structure. (Also see landscape setback requirements in Chapter 18)

SUGGESTED TWEAK:

3. Setbacks: For any **new** parking structure that abuts a ~~residential use/zoning district~~ **Residential Zoning District,** the setbacks shall be ten feet (10') plus two feet (2') for every one foot (1') in height above grade, up to a maximum setback of one hundred feet (100') for the parking structure. (Also see landscape setback requirements in Chapter 18)

8.8.2024 Suggestions regarding landscaping/parking text amendments.

Proposed Addition for Chapter 18, probably as Section 13-18-4.
Please note this section does not yet exist.
We used a redlining format only to show how similar this is to the current 13-12-1(B)
(Also, please note the May draft has a numbering error, in that there are two Sections are marked as 13-18-3…)

13-18-4 : SCOPE OF REGULATIONS:

The provisions of this chapter **18** shall apply as follows, subject to the restrictions set forth in **paragraph 13-18-4(E)** of this chapter:

A. **Landscaping of** accessory off street parking and off street loading facilities shall be provided as required by the regulations of this chapter **18** for all uses and structures established in each district after the effective date hereof**, subject to the limitations set forth in this Section 13-18-4**.

B. ~~However,~~ Where a building permit has been issued prior to the effective date hereof, and construction is begun within ninety (90) days after such effective date and diligently prosecuted to completion, **landscaping of** parking and loading facilities as required for the issuance of said building permit may be provided in lieu of any different amounts required by this chapter.

C. When the intensity of use of any structure or premises is increased through the addition of dwelling units, gross floor area or seating capacity**, landscaping** shall be provided in the amount **required by this chapter** ~~specified herein~~ **for the additional** parking and loading facilities**, if any, required under Section 13-12-1(B)**.

D. Whenever the existing use of a structure shall hereafter be changed to a new use, **landscaping** shall be provided as required **herein for the additional** parking and loading facilities**, if any, required under Section 13-12-1(C)** for such new use.

E. Existing Parking Facilities: **Landscaping of** accessory off street parking facilities in existence on the effective date hereof and located on the same lot as the structure or use served shall not hereafter be reduced below the requirements for a similar new structure or use under the provisions of this chapter **18**.

On Monday, September 2, 2024 at 03:08:56 PM CDT, Bob Lindgren wrote:

Hello Natalie and Rebecca,

My wife Sharon and I have reviewed and considered the proposed rewrite of Oak Brook's zoning ordinance and have some questions and comments.

Our primary interest is with the residential provisions and, because we live within the R-2 district, we have focused on the R-2 district.

We generally support the four-factor system proposed to supplement the existing setback requirements (although we would prefer to see the side yard setback increased to 20'.) If we are correctly understanding the proposed system, the additional limitations represent an improvement over the current ordinance. However, we personally would have liked stronger limits. Under the proposed system, a one-acre lot in the R-2 district could have a principal residence with a "footprint" of 8,000 sq. ft. and a combined accessory use and principal residence "footprint" of approximately 15,000 sq. ft. The total square footage of the principal residence could be as large as 16,000 sq. ft. This is HUGE for a one-acre property. For example, our own property at 1020 Birchwood Road is approximately 320' by 140' for a total area of 44,800 sq. ft. But taking into account the required front (40') and rear (60') setbacks and required side yard setbacks (minimum of 36' in total), the total buildable area for our lot is approximately 11,440 sq. ft., or only about 25% of our total lot area. Buildable area varies significantly with the shape of the lot.

We read the Staff Report on the survey conducted by Warrenville. In our opinion, Glen Ellyn is the surveyed community whose economics and demographics best match Oak Brook's and Warrenville is a good match regarding protection of natural and open space. Both of these communities have more restrictive limits than are currently being proposed for Oak Brook. We feel it would be appropriate and entirely consistent with the articulated purposes of 13-1-2-A, to have limits of .15 (maximum lot coverage or principal residence "footprint"), .25 (maximum lot coverage including accessory uses and structures), and .3 (Floor Area Ratio.)

Regarding the cited Plan Commission Prompt regarding a desire to increase flexibility to add more structures, we can only strongly disagree. Proliferation of structures can become as significant a detriment to the desired ambience as the size and bulk of principal structures.

Finally, we would like to return to the issue of maximum allowable height. When we designed and built our house in the mid-1980s, the maximum structure height was not more than 30'. We do not remember when - in part because were not aware of the proposed change - the permissible height was raised to 45'. Bluntly, this may have been the worst planning and zoning decision taken during our time - 37 years - in Oak Brook. It is hard to imagine how any individual or body charged with protecting and preserving the natural and open ambience of residential Oak Brook could have viewed this increase as desirable. No one needs 4 1/2 stories for a single-family residence. That this change has resulted in widespread eyesores in residential Oak Brook is apparent throughout the Village. Further damage should be prevented by reducing the maximum height to 30' - at least in Residence Districts other than R-1.

One specific example illustrates the inappropriateness of the current 45' height allowance. Birchwood Road in Fullersburg consists of 7 R-2 residential lots, six of which have essentially identical dimensions - approximately 320' wide and 140' deep. The unusual shallowness of these lots combined with the required 40' and 60' front and rear setbacks essentially result in these lots having a maximum buildable depth of 40'. Thus, houses on these lots will invariably be no more than 40' from the front lot line and the maximum height exceeds the maximum depth of the house. This situation creates a canyon-like appearance (think LaSalle St. in downtown Chicago) or alternatively, a Hollywood set, completely at odds with the desired aesthetics and ambience. If it is decided to retain the 45' maximum height, this situation can be addressed by stating that the height may not exceed the depth of the principal dwelling buildable area.

Finally, we have a few more technical questions:
1.) Why are "Institutional and Other Non-Residential Uses" specifically addressed in the Residential Districts section?
2.) Where are "Cluster-Type Single-Family Detached Dwellings" permitted?
3.) Does the Village regulate - in the Zoning Ordinance or elsewhere - the intensity and timing of exterior residential lighting? We have a specific objection to excessive outdoor dusk-to-dawn lighting that we feel is inappropriate in a residential area.

Thanks for considering our input throughout this process. The Zoning ordinance does not get a makeover often and it would be great to have something we can be happy with for the next generation, or more.

Bob and Sharon Lindgren
1020 Birchwood Rd
Oak Brook IL 60523

From: ROBERT LINDGREN
Sent: Wednesday, September 4, 2024 7:44 PM
To: natalie cappetta Rebecca Von Drasek, MPA <rvondrasek@oak-brook.org>
Subject: Showrooms

_____

'It seems to this interloper that if the value to the tenant is the desirability and volume and ultimately profitability of the traffic, the Village needs to find a way to find a way to replace lost sales tax revenue with property rental revenue. Maybe this is not statutorily possible but the tenant should be taxed on the value of the space to the tenant. The revenue generation model needs to be reimagined.

Sent from my iPhone

ITEM
BOARD OF TRUSTEES MEETING
SAMUEL E. DEAN BOARD ROOM
BUTLER GOVERNMENT CENTER
1200 OAK BROOK ROAD
OAK BROOK, ILLINOIS
630-368-5000

AGENDA ITEM

Regular Board of Trustees Meeting
of
October 22, 2024

SUBJECT: Definition of Showroom – Universal Text Amendment - Amended Motion (Planned Development)

FROM: Rebecca Von Drasek, Development Services Director

RECOMMENDED MOTION: I move to amend the Village Board motion to revise the section to Planned Development Amendments to be included within Chapter 2 of Title 13 of the Village Code to, such that the following items are excluded from the scope of an Administrative Change or a Minor Change:

- Any change to, addition or removal of any new parking areas;
- Any alteration of the alignment of roads or above-ground utilities;
- Any amendment of final development agreements, provisions or covenants;
- Any sign not permitted by the Sign Code;
- Any electrical box, gas line, meter, emergency exit door, or other such feature facing an entrance or public street which is not fully screened in a year-round manner;
- Any other change inconsistent with any standard or condition imposed by the corporate authorities in approving the planned development.

Planning & Zoning Commission Original Recommendation:
The commission removed the above items from the list of revisions that would require a Major amendment to a Planned Development (section "D"). The following is the entire section with revisions proposed by the P&Z Commission:

13-15-1: AMENDMENTS AND CHANGES TO APPROVED PLANNED DEVELOPMENT PERMITS:

A. Major Change. Except for those specific alterations that meet the standards to

qualify as a "minor change~~s~~" as provided in subsection B, or an administrative change as provided in subsection C ~~of this section~~, any amendments or modifications to an approved planned development or any addition to or expansion of an existing planned development shall require separate review and approval under the provisions applicable to the initial approval of a planned development.

B. A "minor change" is any change in the site plan or design details of an approved planned development which is consistent with the standards and conditions applicable to the planned development and which does not alter the concept or intent of the planned development, but does not meet the standards of an "Administrative Change" in subsection C. ~~A minor change shall not increase the planned development's density, add new uses, increase any applicable bulk regulation, reduce open space, modify the proportion of housing types, change or add new parking areas, alter alignment of roads, utilities or drainage, amend final development agreements, provisions or covenants, or provide any other change inconsistent with any standard or condition imposed by the corporate authorities in approving the planned development.~~ A developer's request for M~~m~~inor C~~c~~hange ~~may be approved by the village manager, following receipt of a recommendation~~ must be accompanied by an accurate schematic and descriptive narrative of the proposed changes (the " Minor Change Request"). ~~of~~ T~~t~~he ~~community development director~~ Director of Development Services shall make a written recommendation (the "Written Recommendation") to the Village Manager who shall then submit the Minor Change Request and Written Recommendation to the Village President and Board of Trustees (collectively the "Corporate Authorities") for review, such review period not to exceed seven (7) calendar days (the "Notice Period"). At the conclusion of the Notice Period:~~, without obtaining separate approval by the corporate authorities.~~

1. If less than two members of the Corporate Authorities provide a written objection to the Village Manager, the Written Recommendation shall be deemed acceptable and the Minor Change Request shall be approved by the Village Manager;
2. If two or more members of the Corporate Authorities provide a written objection to the Village Manager, the Written Recommendation and Minor Change Request shall be referred to the Corporate Authorities at next available Village Board of Trustees meeting for discussion and/or referral to the Planning and Zoning Commission. At the meeting:

a. If the Corporate Authorities, by majority vote present at such meeting, vote in favor to refer to the Minor Change Request to the Planning and Zoning Commission, then such request shall be deemed a Major Change, requiring separate review and approval under the provisions applicable to the initial approval of a planned development.

b. Any failed vote, by majority present at such meeting, to vote in favor to refer the Minor Change Request to the Planning and Zoning Commission shall be deemed acceptance of the Written Recommendation and the Minor Change Request shall be approved by the Village Manager.

C. Administrative Change. An "Administrative Change" is a nominal change in the site plan or design details of an approved planned development which is consistent with the standards and conditions applicable to the planned development and which does not

materially alter the concept or intent of the planned development. Nominal changes shall be defined as minor shifting of elements within the plan which are otherwise unrecognizable to the general public. Such nominal changes may include shifting of landscape elements, without reduction in number, substantially similar material substitutions, minor architectural modifications such as shifting or rearrangement of features without reduction in the quality of materials or design, or shifting of underground utilities. An Administrative Change may be approved by the Village Manager following receipt of a written recommendation (the "Written Recommendation") of the Director of Development Services.

D. The standard to apply to changes outlined in subsections B and C of this section shall include any material change, which shall be defined as any change where there is a substantial likelihood that such change, when viewed by a reasonable person, would result in an outcome that: (i) is inconsistent with the standards and conditions applicable to the planned development; or (ii) alters the concept or intent of the planned development. The following changes shall be deemed to be material for purposes of this section and specifically excluded from the scope of an Administrative Change or a Minor Change:

1. Any increase the planned development's density (including but not limited to FAR or Lot Coverage);
2. Any addition of any new uses not otherwise permitted by the underlying Zoning District;
3. Any increase in any applicable bulk regulation;
4. Any reduction in open space;
5. Any modification of the proportion of units and/or bedroom counts.

The proposed text sent to the P&Z Commission in May of 2024 included the following highlighted language:

D. The standard to apply to changes outlined in subsections B and C of this section shall include any material change, which shall be defined as any change where there is a substantial likelihood that such change, when viewed by a reasonable person, would result in an outcome that: (i) is inconsistent with the standards and conditions applicable to the planned development; or (ii) alters the concept or intent of the planned development. The following changes shall be deemed to be material for purposes of this section and specifically excluded from the scope of an Administrative Change or a Minor Change:

- Any increase the planned development's density(including but not limited to FAR or Lot Coverage);
- Any addition of any new uses not otherwise permitted by the underlying Zoning District;
- Any increase in any applicable bulk regulation;

- Any reduction in open space;
- Any modification of the proportion of units and/or bedroom counts
- Any change to, addition or removal of any new parking areas;
- Any alteration of the alignment of roads or above-ground utilities;
- Any amendment of final development agreements, provisions or covenants;
- Any sign not permitted by the Sign Code;
- Any electrical box, gas line, meter, emergency exit door, or other such feature facing an entrance or public street which is not fully screened in a year-round manner;
- Any other change inconsistent with any standard or condition imposed by the corporate authorities in approving the planned development.

ITEM
BOARD OF TRUSTEES MEETING
SAMUEL E. DEAN BOARD ROOM
BUTLER GOVERNMENT CENTER
1200 OAK BROOK ROAD
OAK BROOK, ILLINOIS
630-368-5000

AGENDA ITEM

Regular Board of Trustees Meeting
of
October 22, 2024

SUBJECT: Definition of Showroom – Universal Text Amendment - Amended Motion (Building Materials)

FROM: Rebecca Von Drasek, Development Services Director

RECOMMENDED MOTION: I move to amend the Village Board motion to revise the definition of showroom to be included within Chapter 2 of Title 13 of the Village Code to include:

> Building facades in the residential districts shall have exterior wall material consisting of 50% stone or brick for each side of the building (not including areas for windows and doors).

Planning & Zoning Commission Original Recommendation:
The P&Z Commission removed the proposed requirement for new single-family dwellings to be constructed with a require 50% masonry materials. The following was proposed by the Village Board to be included in Chapter 6:

Building facades in the residential districts shall have exterior wall material consisting of 50% stone or brick for each side of the building (not including areas for windows and doors).

ITEM
BOARD OF TRUSTEES MEETING
SAMUEL E. DEAN BOARD ROOM
BUTLER GOVERNMENT CENTER
1200 OAK BROOK ROAD
OAK BROOK, ILLINOIS
630-368-5000

AGENDA ITEM

Regular Board of Trustees Meeting
of
October 22, 2024

SUBJECT: Definition of Showroom – Universal Text Amendment - Amended Motion (Showroom)

FROM: Rebecca Von Drasek, Development Services Director

RECOMMENDED MOTION: I move to amend the Village Board motion to revise the definition of showroom to be included within Chapter 2 of Title 13 of the Village Code to:

> SHOWROOM: a location in Oak Brook where the predominant and most important selling activities do not take place in Oak Brook, such that such sales are not subject to local municipal retailers' occupation tax in Oak Brook.

Planning & Zoning Commission Original Recommendation:
The P&Z Commission recommendation was to define "retail establishments" and "retail; display showroom".

> RETAIL ESTABLISHMENT: Any physical business establishment or facility operated by a retailer engaged in the sale of tangible personal property or services for personal use with individual consumers, whether for- or not- for profit, that maintains stock or supply of the tangible property being offered by the retailer on-premises, with the purpose of facilitating, engaging in, and finalizing related Selling Activities directly with the end user.

> RETAIL; DISPLAY SHOWROOM: Any physical business establishment or facility operated by a seller engaged in the retail sale of tangible personal property, whether for- or not- for profit, that maintains no available stock or supply of the tangible

property primarily being offered by the seller on-premises, and whereby the facilitation and processing of Selling Activities occur off-premises.

ITEM 13.A.1.
BOARD OF TRUSTEES MEETING
SAMUEL E. DEAN BOARD ROOM
BUTLER GOVERNMENT CENTER
1200 OAK BROOK ROAD
OAK BROOK, ILLINOIS
630-368-5000

AGENDA ITEM

Board of Trustees Regular Meeting
of
October 22, 2024

SUBJECT: Acquisition of Real Property

FROM: Greg Summers, Village Manager

BUDGET SOURCE/BUDGET IMPACT: As per the contract to be reviewed and discussed in Closed Session

RECOMMENDED MOTION: I move to approve Ordinance S-1708, An Ordinance Authorizing the Acquisition of And Approving a Purchase Agreement for the Real Property Commonly known as _____, Illinois

Background/History:
As part of the Village's ongoing planning initiatives and desire to protect unutilized and underutilized properties within or adjoining the Village, staff has identified a strategic parcel where acquisition by the Village would ensure full Village control over current and future use of the property. In conjunction with prior Closed Session Village Board discussions, staff has been successful in negotiating proposed terms with the current owner of the property, within the Board authorized parameters, regarding acquisition of the parcel.

This item will first be discussed in Closed Session, prior to returning to open session to approve a contract for the acquisition of real estate.

Recommendation:
Staff recommends that the Village Board approve Ordinance S-1708, An Ordinance Authorizing the Acquisition of And Approving a Purchase Agreement for the Real Property Commonly known as _____, Illinois

Attachments:
1. 2024-LND-ACQ-S-1708

THE VILLAGE OF OAK BROOK

COOK AND DUPAGE COUNTIES, ILLINOIS

ORDINANCE

NUMBER 2024-LND-ACQ-S-1708

AN ORDINANCE
AUTHORIZING THE ACQUISITION OF AND APPROVING A PURCHASE AGREEMENT FOR THE REAL PROPERTY COMMONLY KNOWN AS _____, ILLINOIS

LAURENCE E. HERMAN, Village President
NETASHA SCARPINITI, Village Clerk

NAVEEN JAIN
MICHAEL MANZO
MELISSA MARTIN
JAMES NAGLE
A. SURESH REDDY
EDWARD TIESENGA

Village Board

Published in pamphlet form by authority of the
President and the Board of Trustees of the Village of Oak Brook
on this the 22nd day of October 2024

ORDINANCE NO. 2024-LND-ACQ-S-1708

AN ORDINANCE
AUTHORIZING THE ACQUISITION OF AND APPROVING A PURCHASE AGREEMENT FOR THE REAL PROPERTY COMMONLY KNOWN AS _____, ILLINOIS

WHEREAS, the Village of Oak Brook (the "Village") is a municipal corporation with authority provided for and granted pursuant to the Illinois Municipal Code to exercise certain powers and perform certain functions pertaining to its local government and affairs;

WHEREAS, the Village President and Board of Trustees (collectively, the "Corporate Authorities") have the power by ordinance adopted by an affirmative vote of two-thirds of the same to purchase or lease real or personal property for public purposes pursuant to contracts or leases which provide for the consideration for such purchase or lease to be paid in annual installments during a period not exceeding 20 years;

WHEREAS, the Village is interested in acquiring the real property commonly known as _____, Illinois (the "Subject Property") as further described in and subject to the terms of the Real Estate Purchase Agreement (the "Agreement"), attached hereto and incorporated herein as Exhibit A; and

WHEREAS, the Corporate Authorities find that the acquisition of the Subject Property referenced herein is in the best interests of the public health, safety, and welfare of the Village of Oak Brook;

NOW, THEREFORE, BE IT ORDAINED, in open meeting assembled, by the Village President and Board of Trustees of the Village of Oak Brook, DuPage and Cook Counties, Illinois as follows:

Section One – Recitals

The Corporate Authorities hereby find that all of the recitals hereinbefore stated as contained in the preamble to this Ordinance are full, true, and correct and do hereby, by reference, incorporate and make them part of this Ordinance as legislative findings.

Section Two -- Approval and Authorization to Acquire Real Property

The Corporate Authorities, by two-thirds affirmative vote, hereby authorizes and approves the acquisition of the Subject Property for the purchase price of _____ Dollars and 00/100 ($_____).

Section Three – Approval, Authorization and Direction to Execute the Purchase Agreement

The Village Manager is hereby authorized to execute, and the Village Clerk is hereby authorized to attest the Purchase Agreement, substantially in the form of such agreement attached hereto and made a part hereof as Exhibit A, with such changes therein as shall be approved by the Village Attorney and the officials of the Village executing the same, their execution thereof to constitute exclusive evidence of their approval to any and all changes or revisions therein from and after the execution and delivery of such Agreement.

Section Four - Other Actions Authorized

The officers, employees and/or agents of the Village shall take all actions necessary or reasonably required to carry out and give effect to the intent of this Ordinance and otherwise to consummate the transactions contemplated herein, and shall take all actions necessary in conformity therewith including, without limitation, the execution and delivery of all documents required to be delivered in connection with the transaction contemplated herein which shall include the execution of any and all closing documents including but not limited to the closing statement and related title documents.

Section Five - Authorization of Expenditures

The Corporate Authorities hereby authorize and direct the expenditure of all costs related to the execution of the Agreement, additionally, the Village is authorized and directed to allocate and spend all necessary funds to fulfill the requirements of the Purchase Agreement and of this Ordinance.

Section Six - Acts of Village Officials

That all past, present and future acts and doings of the officials of the Village that are in conformity with the purpose and intent of this Ordinance are hereby, in all respects, ratified, approved, authorized and confirmed.

Section Seven - Conflict Clause

That all Ordinances or parts of Ordinances in conflict with the terms of this Ordinance shall be repealed to the extent of said conflict.

Section Eight - Passage Clause

That this Ordinance shall take full force and effect from and after its passage, approval and publication as provided by law.

Section Nine – Saving Clause

If any section, paragraph, clause or provision of this Ordinance is declared by a court of law to be invalid or unconstitutional, the invalidity or unconstitutionality thereof shall not affect the validity of the remaining provisions of the Ordinance, which are hereby declared to be separable.

Section Ten – Recording

This Ordinance shall be entered into the minutes and upon the journals of the Board of Trustees of the Village of Oak Brook.

PASSED THIS 22nd day of October 2024.

Ayes: _____

Nays: _____

Absent: _____

APPROVED THIS 22nd day of October 2024.

_____
LAURENCE E. HERMAN,
Village President

ATTEST:

_____
NETASHA SCARPINITI,
Village Clerk

EXHIBIT A

[Purchase Agreement]

ITEM 13.B.
BOARD OF TRUSTEES MEETING
SAMUEL E. DEAN BOARD ROOM
BUTLER GOVERNMENT CENTER
1200 OAK BROOK ROAD
OAK BROOK, ILLINOIS
630-368-5000

AGENDA ITEM

Board of Trustees Regular Meeting
of
October 22, 2024

SUBJECT: Employee Appeal of a Disciplinary Finding

FROM: Greg Summers, Village Manager

BUDGET SOURCE/BUDGET IMPACT: N/A

RECOMMENDED MOTION: The Village Board shall make one of the following motions:

1. I move to uphold the Village Manager's decision regarding a 5-day suspension issued to employee _____ relative to a violation of the Village's Personnel Manual; or
2. I move to overturn and vacate the Village Manager's decision regarding a 5-day suspension issued to employee _____ relative to a violation of the Village's Personnel Manual.

Background/History:
On October 2, 2024, the Village Manager held a Loudermill Pre-Disciplinary Hearing regarding a violation of the Village's Personnel Manual. At the end of the hearing Village Attorney Meganne Trela and the Village Manager concluded that the employee's violation warranted a suspension in compliance with the FLSA/Illinois lack of adoption thereof. The employee has elected to appeal the hearing decision. Additional information is contained in the Closed Session packet.

Recommendation:
Staff recommends that the Village Board review the employee disciplinary finding in closed session, as well as all relevant attachments, and after returning to open session make one of the following motions:

I move to uphold the Village Manager's decision regarding a 5-day suspension issued to employee _____ relative to a violation of the Village's Personnel Manual;

or

I move to overturn and vacate the Village Manager's decision regarding a 5-day suspension issued to employee _____ relative to a violation of the Village's Personnel Manual.

Attachments:
None